- REV. 3-20-00: ADDED SPECIAL NOTE RESTRICTING USE OF NO. 13 CATCH BASINS TO RADIUS LESS THAN 7.6 METERS.
- REV. 5-27-01: CHANGED PAY ITEMS IN GENERAL NOTE (I). ADDED CATCH BASIN MAXIMUM DEPTH NOTE.

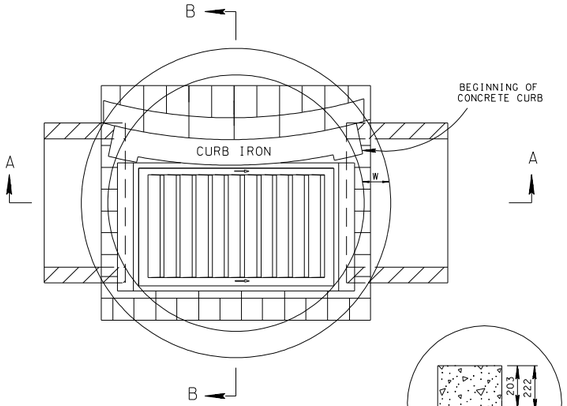

PLAN VIEW

CATCH BASIN MINIMUM DEPTH TABLE			
INSIDE DIAMETER (X) OF PIPE (mm)	MINIMUM DEPTH - (m)		
	CONCRETE PIPE	CORRUGATED METAL PIPE	POLYETHYLENE PIPE
450	1.29	1.23	1.27
600	1.45	1.38	1.43

(1) DEPTH MEASUREMENT MADE FROM TOP OF GRATE TO OUTLET FLOW ELEVATION BASED ON INLET AND OUTLET PIPES BEING THE SAME DIAMETER. IF OUTLET PIPE IS GREATER ADJUSTMENT IN DEPTHS MUST BE MADE TO ACCOMMODATE THIS SITUATION.

(2) TO DETERMINE FLOOR OF CATCH BASIN ELEVATION, WHEN INLET AND OUTLET PIPES ARE THE SAME SIZE, ADD PIPE WALL THICKNESS PLUS 40 mm TO THE ABOVE MINIMUM DEPTHS.

LID REINFORCING

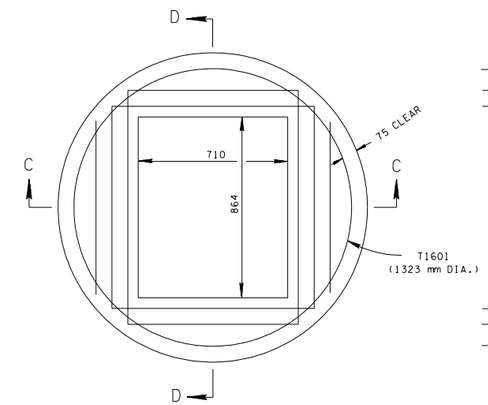

PLAN VIEW

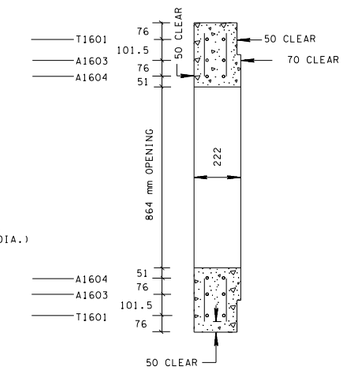

SECTION D-D

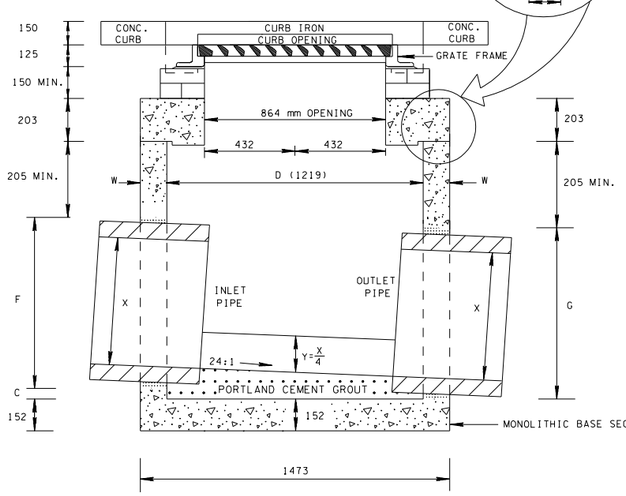

SECTION A-A

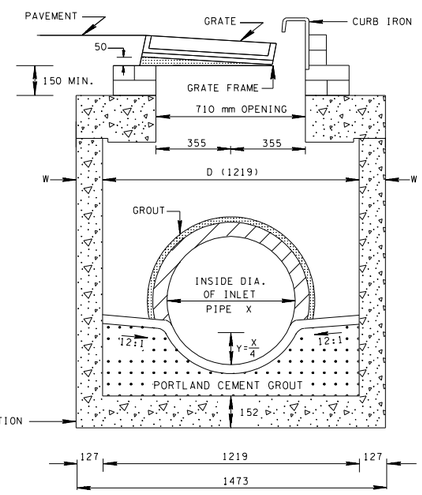

SECTION B-B

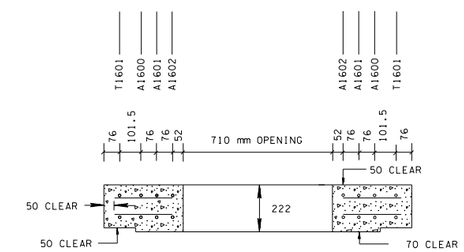

SECTION C-C

SPECIAL NOTE
TO BE USED ON RADIUS LESS THAN 7.6 METERS. FOR RADIUS 7.6 METERS AND GREATER USE TYPE 12 CATCH BASIN.

CATCH BASIN MAXIMUM DEPTH NOTE
MAXIMUM DEPTH FOR THIS STRUCTURE IS 6.1 m. WHEN DEPTH REQUIREMENTS EXCEED THIS DEPTH THE CONTRACTOR IS TO USE OTHER VERSIONS OF THE NO. 13 CATCH BASIN.

GENERAL NOTES

(A) ALL PRECAST ELEMENTS TO MEET ASTM C478M (CURRENT EDITION) AND AASHTO M199 (CURRENT EDITION) UNLESS SUPERSEDED BY THIS DRAWING.
CONCRETE: f'_c = 28 MPa AT 28 DAYS
REINFORCING STEEL: ASTM A615M, F_y = 415 MPa
ALL REINFORCING IS TO BE INSTALLED AS DETAILED ON THIS DRAWING.

(B) PRECAST CATCH BASIN UNITS WHICH ARE DAMAGED DURING SHIPMENT OR INSTALLATION WILL BE REJECTED. IT SHALL BE THE RESPONSIBILITY OF THE CONTRACTOR TO REPLACE DAMAGED CATCH BASIN UNITS AT HIS OWN EXPENSE.

(C) ADDITIONAL REINFORCING STEEL NECESSARY ABOVE THE CORED OR FORMED CUT-OUT HOLES TO MAINTAIN THE INTEGRITY OF THE STRUCTURE DURING HANDLING AND PLACEMENT SHALL BE THE RESPONSIBILITY OF THE FABRICATOR.

(D) APPROPRIATE SIZING AND LOCATION OF LIFTING DEVICES SHALL BE THE RESPONSIBILITY OF THE FABRICATOR TO ASSURE BALANCED HANDLING DURING INSTALLATION OF THE PRECAST CATCH BASIN.

(E) THE CONTRACTOR IS TO PATCH ALL LIFTING DEVICE HOLES AND PLACE A MINIMUM OF 25 mm OF COVER OVER THE HARDWARE OF THESE DEVICES ON BOTH TOP AND BOTTOM SURFACES.

(F) INVERT ELEVATIONS ARE TO BE ADJUSTED AS DIRECTED BY THE ENGINEER IN ORDER TO ACCOMMODATE INLET AND OUTLET PIPES.

(G) SEE STANDARD DRAWING DM-CBB-13 FOR DETAILS REGARDING CAST IRON GRATES, FRAMES AND CURB INLETS.

(H) SEE STANDARD DRAWING DM-CB-13RB FOR DETAILS REGARDING 1524 mm AND LARGER CIRCULAR NO. 13 CATCH BASIN (FOR USE WITH 150 mm NONMOUNTABLE CURB).

(I) PAYMENT FOR CATCH BASIN WILL BE MADE UNDER ITEM NUMBERS 611M13.02 CATCH BASINS, TYPE 13, > 1m-2m DEPTH THROUGH 611M13.06 CATCH BASINS, TYPE 13, > 5m-6m DEPTH PER EACH.

CUT-OUT HOLES FOR INLET & OUTLET PIPES			
INSIDE DIAMETER (X) OF PIPE (mm)	DIAMETER OF CUT-OUT HOLES F & G - (mm)		
	CONCRETE PIPE	CORRUGATED METAL PIPE	POLYETHYLENE PIPE
450	660	535	610
600	815	685	785

CUT-OUT HOLES FOR PRECAST STRUCTURES TO BE CORED OR FORMED IN ORDER TO OBTAIN A SMOOTH EDGED HOLE. SCORED OR ETCHED HOLES WITH REINFORCING STEEL LEFT UNCUT WILL NOT BE PERMITTED.

CATCH BASIN DIMENSIONS					
INSIDE DIA. OF CATCH BASIN D (mm)	WALL THICKNESS W (mm)	OUTSIDE DIA. OF CATCH BASIN D + 2W (mm)	MAX. INLET OR OUTLET CONC. PIPE SIZE - STR. (mm)	MAX. INLET OR OUTLET CONC. PIPE SIZE - 90° (mm)	DIMENSION C (mm)
1219	127	1473	600	375	50

TENNESSEE METRIC D.O.T.

ALL UNITS ARE IN MILLIMETERS UNLESS NOTED OTHERWISE.

MINOR REVISION -- FHWA APPROVAL NOT REQUIRED.

STATE OF TENNESSEE
DEPARTMENT OF TRANSPORTATION

STANDARD PRECAST 1219 mm CIRCULAR NO.13 CATCH BASIN
(FOR USE WITH 150 mm NONMOUNTABLE CURB)

1-19-00 | DM-CB-13RA

3/21/2007 8:34:40 AM
$$$$DONSPEC$$$$