REV. 5-27-01: CHANGED PAY ITEMS IN GENERAL NOTE (H). ADDED CATCH BASIN MAXIMUM DEPTH NOTE.

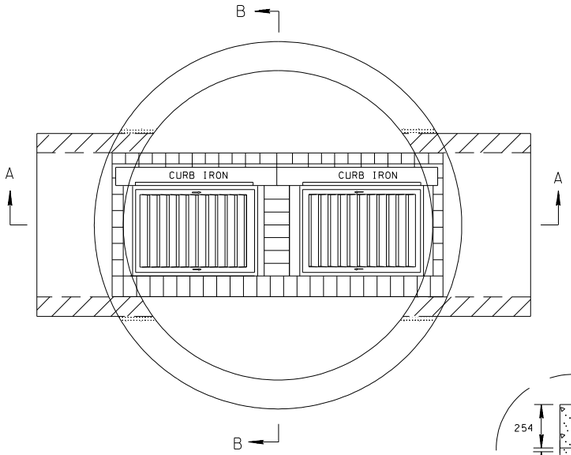


PLAN VIEW

## REINFORCING STEEL LEGEND

| | |
|---|---|
| 2795 | A1601 |
| 965 | A1602 |
| 940 | A1603 |
| 890 | A1604 |
| 815 | A1605 |
| 710 | A1606 |
| 585 | A1607 |
| 1625 | A1608 |
| 1475 | A1609 |
| 1170 | A1610 |
| 1370 | A1611 |
| 1755 | A1612 |
| 2030 | A1613 |
| 2235 | A1614 |
| 2415 | A1615 |
| 2540 | A1616 |
| 2615 | A1617 |
| 2665 | A1618 |

LID REINFORCING

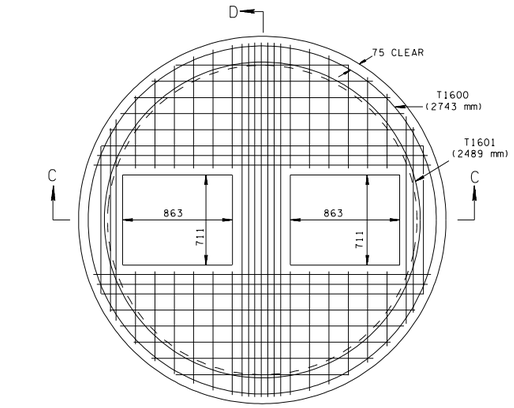


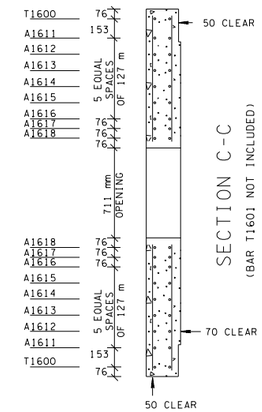


SECTION C-C
(BAR T1601 NOT INCLUDED)

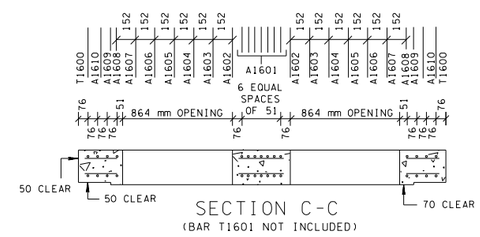


SECTION C-C
(BAR T1601 NOT INCLUDED)

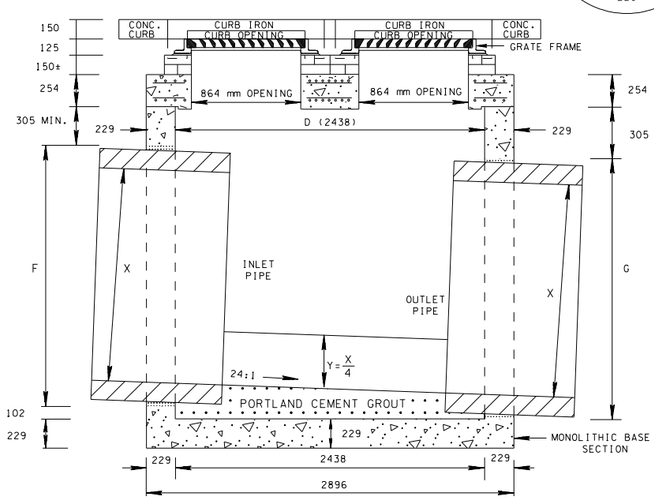


SECTION A-A

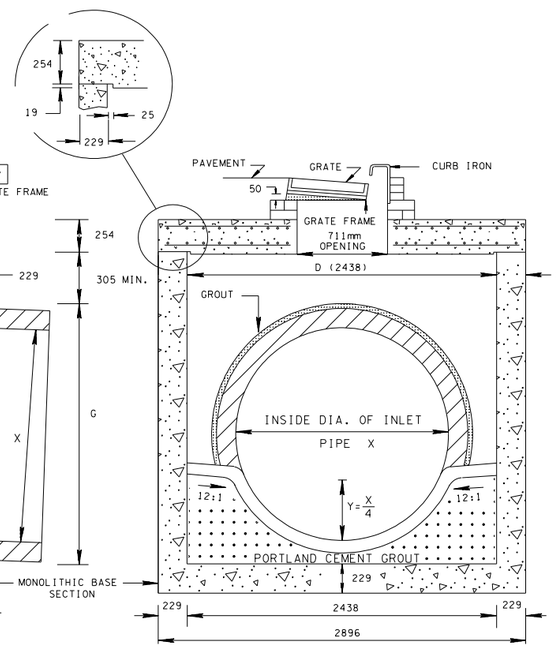


SECTION B-B

## CATCH BASIN MAXIMUM DEPTH NOTE

MAXIMUM DEPTH FOR PRECAST CONCRETE CIRCULAR CATCH BASINS IS 12 m.

## CATCH BASIN MINIMUM DEPTH TABLE

| INSIDE DIAMETER (X) OF PIPE (mm) | MINIMUM DEPTH - (m) | | |
|---|---|---|---|
| | CONCRETE PIPE | CORRUGATED METAL PIPE | POLYETHYLENE PIPE |
| 450 | 1.50 | 1.44 | 1.47 |
| 600 | 1.65 | 1.59 | 1.64 |
| 750 | 1.83 | 1.74 | 1.82 |
| 900 | 1.99 | 1.91 | 1.97 |
| 1050 | 2.16 | 2.06 | 2.11 |
| 1200 | 2.33 | 2.21 | 2.26 |
| 1350 | 2.49 | 2.36 | ____ |
| 1500 | 2.65 | 2.51 | ____ |
| 1650 | 2.82 | 2.67 | ____ |

(1) DEPTH MEASUREMENT MADE FROM TOP OF GRATE TO OUTLET FLOW ELEVATION BASED ON INLET AND OUTLET PIPES BEING THE SAME DIAMETER. IF OUTLET PIPE IS GREATER ADJUSTMENT IN DEPTHS MUST BE MADE TO ACCOMMODATE THIS SITUATION.

(2) TO DETERMINE FLOOR OF CATCH BASIN ELEVATION, WHEN INLET AND OUTLET PIPES ARE THE SAME SIZE, ADD PIPE WALL THICKNESS PLUS 40 mm TO THE ABOVE MINIMUM DEPTHS.

## CUT-OUT HOLES FOR INLET & OUTLET PIPES

| INSIDE DIAMETER (X) OF PIPE (mm) | DIAMETER OF CUT-OUT HOLES F & G - (MILLIMETERS) | | |
|---|---|---|---|
| | CONCRETE PIPE | CORRUGATED METAL PIPE | POLYETHYLENE PIPE |
| 450 | 660 | 535 | 610 |
| 600 | 815 | 685 | 785 |
| 750 | 1015 | 840 | 990 |
| 900 | 1195 | 1015 | 1145 |
| 1050 | 1370 | 1170 | 1270 |
| 1200 | 1550 | 1320 | 1420 |
| 1350 | 1725 | 1475 | ____ |
| 1500 | 1905 | 1625 | ____ |
| 1650 | 2085 | 1780 | ____ |

CUT-OUT HOLES FOR PRECAST STRUCTURES TO BE CORED OR FORMED IN ORDER TO OBTAIN A SMOOTH EDGED HOLE. SCORED OR ETCHED HOLES WITH REINFORCING STEEL LEFT UNCUT WILL NOT BE PERMITTED.

## GENERAL NOTES

(A) ALL PRECAST ELEMENTS TO MEET ASTM C478M (CURRENT EDITION) AND AASHTO M199 (CURRENT EDITION) UNLESS SUPERSEDED BY THIS DRAWING.
CONCRETE: $f'_c$ = 28 MPa AT 28 DAYS
REINFORCING STEEL: ASTM A615M, $f_y$ = 415 MPa
ALL REINFORCING IS TO BE INSTALLED AS DETAILED ON THIS DRAWING.

(B) PRECAST CATCH BASIN UNITS WHICH ARE DAMAGED DURING SHIPMENT OR INSTALLATION WILL BE REJECTED. IT SHALL BE THE RESPONSIBILITY OF THE CONTRACTOR TO REPLACE DAMAGED CATCH BASIN UNITS AT HIS OWN EXPENSE.

(C) ADDITIONAL REINFORCING STEEL NECESSARY ABOVE THE CORED OR FORMED CUT-OUT HOLES TO MAINTAIN THE INTEGRITY OF THE STRUCTURE DURING HANDLING AND PLACEMENT SHALL BE THE RESPONSIBILITY OF THE FABRICATOR.

(D) APPROPRIATE SIZING AND LOCATION OF LIFTING DEVICES SHALL BE THE RESPONSIBILITY OF THE FABRICATOR TO ASSURE BALANCED HANDLING DURING INSTALLATION OF THE PRECAST CATCH BASIN.

(E) THE CONTRACTOR IS TO PATCH ALL LIFTING DEVICE HOLES AND PLACE A MINIMUM OF 25 mm OF COVER OVER THE HARDWARE OF THESE DEVICES ON BOTH TOP AND BOTTOM SURFACES.

(F) INVERT ELEVATIONS ARE TO BE ADJUSTED AS DIRECTED BY THE ENGINEER IN ORDER TO ACCOMMODATE INLET AND OUTLET PIPES.

(G) SEE STANDARD DRAWING DM-CBB-12A FOR DETAILS REGARDING CAST IRON GRATES, FRAMES AND CURB INLETS.

(H) PAYMENT FOR CATCH BASIN WILL BE MADE UNDER ITEM NUMBERS 611M14.02 CATCH BASINS, TYPE 14, > 1m-2m DEPTH THROUGH 611M14.09, CATCH BASINS, TYPE 14, > 8m-9m DEPTH PER EACH. PAYMENT FOR CATCH BASINS DEEPER THAN 9 m WILL BE MADE UNDER ITEM NUMBER 611M14.10, CATCH BASINS, TYPE 14, ____ m - ____ m DEPTH PER EACH.

## CATCH BASIN DIMENSIONS

| INSIDE DIA. OF CATCH BASIN (mm) | WALL THICKNESS (mm) | LID THICKNESS (mm) | OUTSIDE DIA. OF CATCH BASIN (mm) | MAX. INLET OR OUTLET CONC. PIPE SIZE - STR. (mm) | MAX. INLET OR OUTLET CONC. PIPE SIZE - 90° (mm) |
|---|---|---|---|---|---|
| 2438 | 229 | 254 | 2896 | 1650 | 1050 |

TENNESSEE METRIC D.O.T.

ALL UNITS ARE IN MILLIMETERS UNLESS NOTED OTHERWISE.

MINOR REVISION -- FHWA APPROVAL NOT REQUIRED.

STATE OF TENNESSEE
DEPARTMENT OF TRANSPORTATION

STANDARD PRECAST CIRCULAR NO. 14RB CATCH BASIN

3-20-00 | DM-CB-14RB

3/21/2007 8:34:26 AM
$$$$DONSPEC$$$$