- REV. 5-27-01: CHANGED PAY ITEMS IN GENERAL NOTE (I).
- REV. 7-29-02: CHANGED ASTM SPECIFICATION IN GENERAL NOTE (C).
- REV. 11-1-95: CHANGED TO METRIC.
- REV. 10-26-96: MODIFIED DRAWING NO. DM-CB-25S BY CHANGING MATERIAL IN SIDE WALLS FROM CONCRETE TO BRICK.
- REV. 12-18-96: REMOVED 13 mm PREMOLDED FIBER EXPANSION JOINT FROM SECTION "B-B". REMOVED OLD GENERAL NOTE (G). CHANGED LABEL OF LAST THREE GENERAL NOTES.
- REV. 4-15-97: CHANGED LABEL OF BASE SECTION.
- REV. 10-26-97: CHANGED MINIMUM DEPTH TABLE AND MODIFIED STEEL IN BASE SECTION.
- REV. 1-19-99: MODIFIED CATCH BASIN MINIMUM DEPTH TABLE.

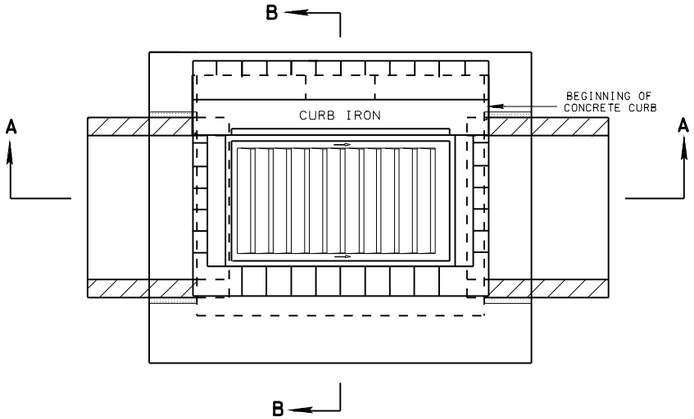

PLAN VIEW

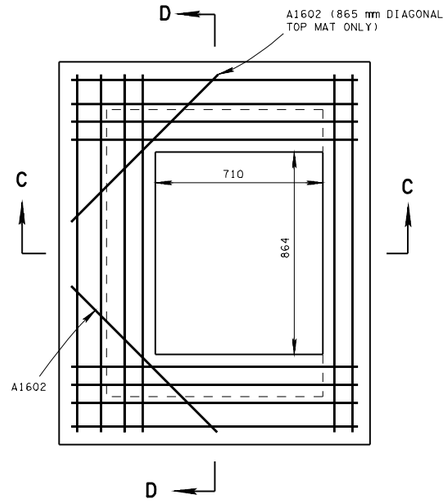

PLAN VIEW

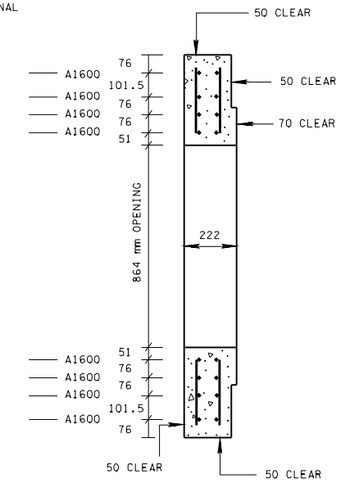

SECTION D-D

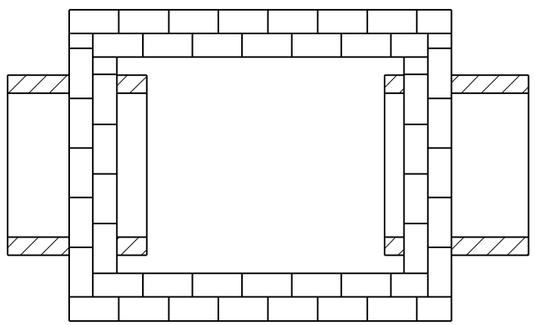

SECTION E-E

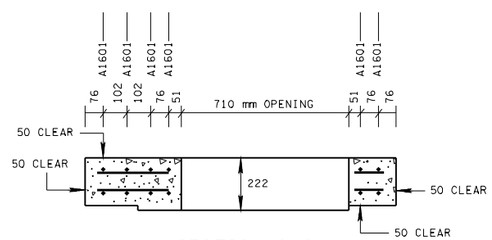

SECTION C-C

REINFORCING STEEL LEGEND

1220	A1600
1525	A1601
865	A1602

CATCH BASIN MINIMUM DEPTH TABLE

INSIDE DIAMETER (X) OF PIPE (mm)	MINIMUM DEPTH - (m)		
	CONCRETE PIPE	CORRUGATED METAL PIPE	POLYETHYLENE PIPE
450	1.30	1.23	1.27
600	1.45	1.38	1.44
750	1.62	1.54	1.61

(1) DEPTH MEASUREMENT MADE FROM TOP OF GRATE TO OUTLET FLOW ELEVATION BASED ON INLET AND OUTLET PIPES BEING THE SAME DIAMETER, IF OUTLET PIPE IS GREATER ADJUSTMENT IN DEPTHS MUST BE MADE TO ACCOMMODATE THIS SITUATION.

(2) TO DETERMINE FLOOR OF CATCH BASIN ELEVATION, WHEN INLET AND OUTLET PIPES ARE THE SAME SIZE, ADD PIPE WALL THICKNESS PLUS 40 mm TO THE ABOVE MINIMUM DEPTHS.

CUT-OUT HOLES FOR INLET & OUTLET PIPES

INSIDE DIAMETER (X) OF PIPE (mm)	DIAMETER OF CUT-OUT HOLES F & G - (MILLIMETERS)		
	CONCRETE PIPE	CORRUGATED METAL PIPE	POLYETHYLENE PIPE
450	660	535	610
600	815	685	785
(1) 750	1015	840	990

(1) TO BE USED IN FRONT AND BACK WALLS ONLY.

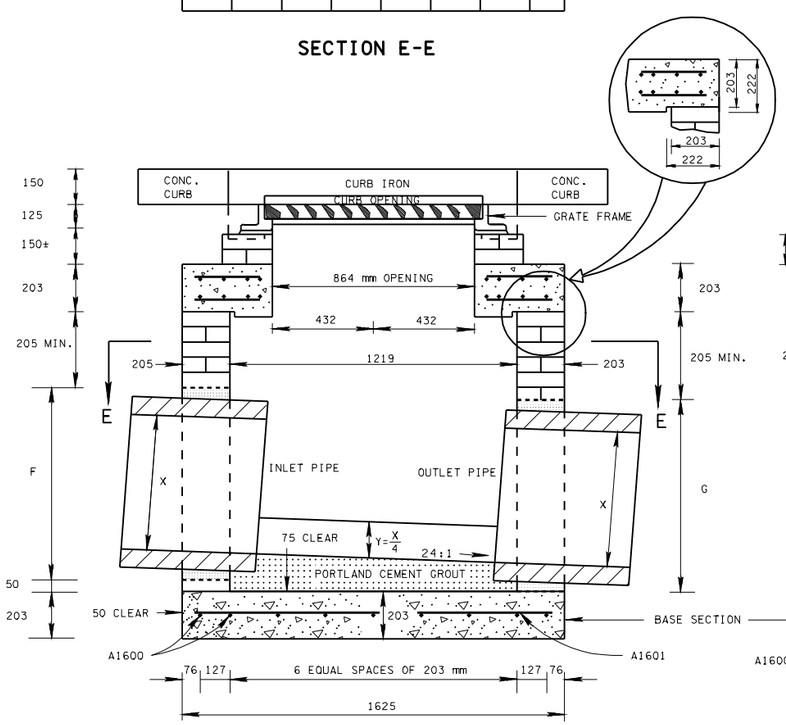

SECTION A-A

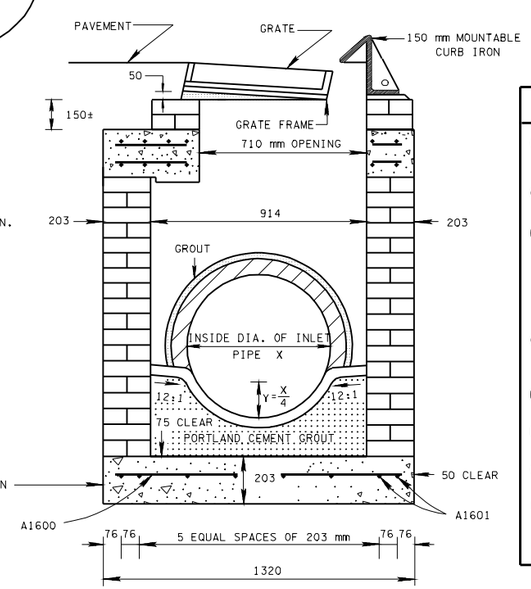

SECTION B-B

GENERAL NOTES

(A) DRAWING TO BE USED FOR NO. 25 BRICK CATCH BASINS THAT ARE 2.4 METER AND LESS IN DEPTH. SEE STANDARD DRAWINGS DM-CB-25P AND DM-CB-25S FOR DETAILS OF NO. 25 CONCRETE CATCH BASINS THAT ARE MORE THAN 2.4 METER IN DEPTH.

(B) CAST-IN-PLACE CONCRETE USED IN BRICK CATCH BASINS SHALL BE CONSTRUCTED IN ACCORDANCE WITH STANDARD SPECIFICATIONS, SECTION 611 AND/OR SPECIAL PROVISIONS.

(C) THE CONTRACTOR MAY WITH PERMISSION FROM THE ENGINEER SUBSTITUTE PRECAST CATCH BASINS FOR CAST-IN-PLACE CATCH BASINS PROVIDED THAT ALL PRECAST ELEMENTS MEET ASTM M913 (CURRENT EDITION) UNLESS SUPERSEDED BY THIS DRAWING.

CONCRETE: f'_c = 28 MPa AT 28 DAYS
REINFORCING STEEL: ASTM A615M, F_Y = 415 MPa
ALL REINFORCING IS TO BE INSTALLED AS DETAILED ON THIS DRAWING.

(D) PRECAST CATCH BASIN UNITS USED FOR LIDS AND FLOORS WHICH ARE DAMAGED DURING SHIPMENT OR INSTALLATION WILL BE REJECTED. IT SHALL BE THE RESPONSIBILITY OF THE CONTRACTOR TO REPLACE DAMAGED CATCH BASIN UNITS AT HIS OWN EXPENSE.

(E) APPROPRIATE SIZING AND LOCATION OF LIFTING DEVICES SHALL BE THE RESPONSIBILITY OF THE FABRICATOR TO ASSURE BALANCED HANDLING DURING INSTALLATION OF THE CATCH BASIN.

(F) THE CONTRACTOR IS TO PATCH ALL LIFTING DEVICE HOLES AND PLACE A MINIMUM OF 25 mm OF COVER OVER THE HARDWARE OF THESE DEVICES ON BOTH TOP AND BOTTOM SURFACES.

(G) INVERT ELEVATIONS ARE TO BE ADJUSTED AS DIRECTED BY THE ENGINEER IN ORDER TO ACCOMMODATE INLET AND OUTLET PIPES.

(H) SEE STANDARD DRAWING DM-CBB-12B FOR DETAILS REGARDING CAST IRON GRATES, FRAMES AND CURB INLETS.

(I) PAYMENT FOR CATCH BASIN WILL BE MADE UNDER ITEM NUMBERS 611M25.02 CATCH BASINS, TYPE 25, > 1m-2m DEPTH AND 611M25.03, CATCH BASINS, TYPE 25, > 2m-3m DEPTH PER EACH.

TENNESSEE METRIC D.O.T.

ALL UNITS ARE IN MILLIMETERS UNLESS NOTED OTHERWISE.

☐ MINOR REVISION -- FHWA APPROVAL NOT REQUIRED.

STATE OF TENNESSEE
DEPARTMENT OF TRANSPORTATION

STANDARD RECTANGULAR BRICK NO. 25 CATCH BASIN
(FOR USE WITH 150 mm MOUNTABLE CURB)

10-26-96 | DM-CB-25B