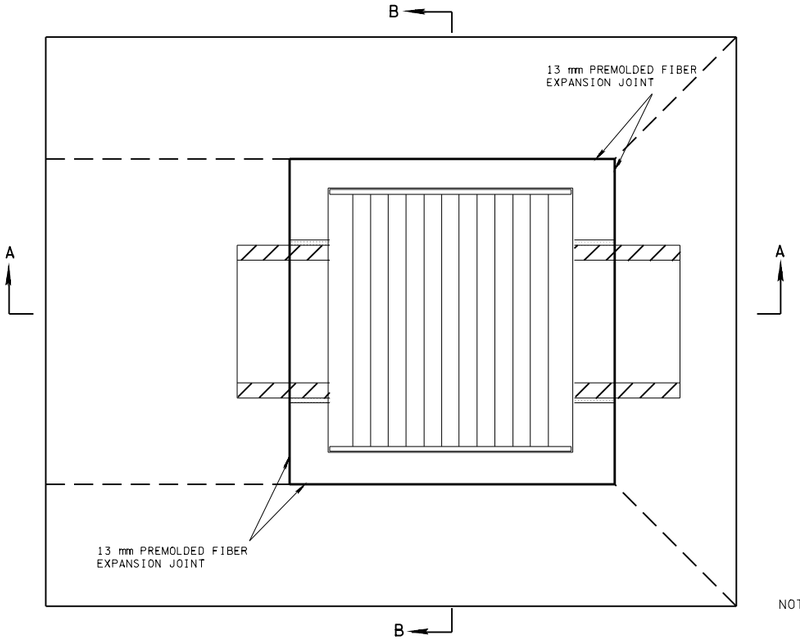

PLAN VIEW

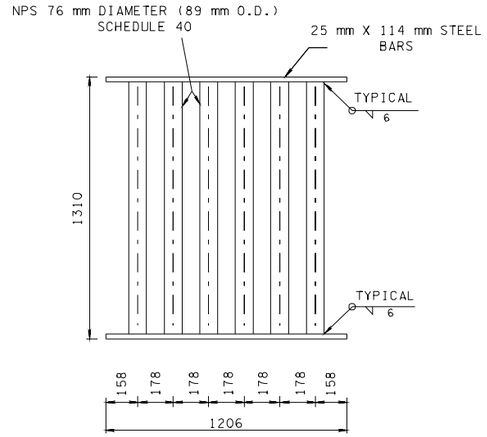

GRATE UNIT NO. 39

GRATE UNIT IS STRUCTURALLY DESIGNED TO CARRY LOW SPEED MAINTENANCE VEHICLES ONLY.

NOTE: MATERIAL FOR GRATE SPECIFICATIONS FOR STEEL BARS SHALL CONFORM TO ASTM A36M. FOR THE PIPE CROSS MEMBERS, ASTM A53 TYPE E OR S GRADE A OR B. THE GRATE UNIT SHALL BE PAINTED BLACK, FEDERAL SPEC. TT-E-489G.

WELDING:

AWS SPECIFICATIONS D1.1-72 AS MODIFIED BY THE CURRENT AASHTO STD. SPECIFICATIONS FOR WELDING OF HIGHWAY BRIDGES.

REINFORCING STEEL LEGEND

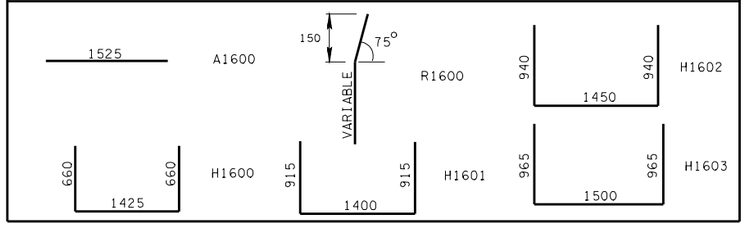

REV. 10-26-98: CHANGED STEEL BARS ON GRATE UNIT FROM 25 mm x 108 mm TO 25 mm x 114 mm.

☐ REV. 5-27-01: CHANGED PAY ITEMS IN GENERAL NOTE (J). ADDED CATCH BASIN MAXIMUM DEPTH NOTE.

☐ REV. 7-29-02: CHANGED ASTM SPECIFICATION IN GENERAL NOTE (C).

☐ REV. 9-11-02: CHANGED GENERAL NOTE (J).

GENERAL NOTES

(A) DRAWING TO BE USED FOR ALL CAST-IN-PLACE NO. 39 CONCRETE CATCH BASINS AND ALL PRECAST NO. 39 CONCRETE CATCH BASINS.

(B) CAST-IN-PLACE CONCRETE CATCH BASINS SHALL BE CONSTRUCTED IN ACCORDANCE WITH STANDARD SPECIFICATIONS, SECTION 611 AND/OR SPECIAL PROVISIONS.

(C) THE CONTRACTOR MAY WITH PERMISSION FROM THE ENGINEER SUBSTITUTE PRECAST CATCH BASINS FOR CAST-IN-PLACE CATCH BASINS PROVIDED THAT ALL PRECAST ELEMENTS MEET ASTM M913 (CURRENT EDITION) UNLESS SUPERSEDED BY THIS DRAWING.

CONCRETE: f'_c = 28 MPa AT 28 DAYS
REINFORCING STEEL: ASTM A615M, f_y = 415 MPa
ALL REINFORCING IS TO BE INSTALLED AS DETAILED ON THIS DRAWING.

(D) PRECAST CATCH BASIN UNITS WHICH ARE DAMAGED DURING SHIPMENT OR INSTALLATION WILL BE REJECTED. IT SHALL BE THE RESPONSIBILITY OF THE CONTRACTOR TO REPLACE DAMAGED CATCH BASIN UNITS AT HIS OWN EXPENSE.

(E) ADDITIONAL REINFORCING STEEL NECESSARY ABOVE THE CORED OR FORMED CUT-OUT HOLES TO MAINTAIN THE INTEGRITY OF THE STRUCTURE DURING HANDLING AND PLACEMENT SHALL BE THE RESPONSIBILITY OF THE FABRICATOR.

(F) APPROPRIATE SIZING AND LOCATION OF LIFTING DEVICES SHALL BE THE RESPONSIBILITY OF THE FABRICATOR TO ASSURE BALANCED HANDLING DURING INSTALLATION OF THE CATCH BASIN.

(G) THE CONTRACTOR IS TO PATCH ALL LIFTING DEVICE HOLES AND PLACE A MINIMUM OF 25 mm OF COVER OVER THE HARDWARE OF THESE DEVICES ON BOTH TOP AND BOTTOM SURFACES.

(H) INVERT ELEVATIONS ARE TO BE ADJUSTED AS DIRECTED BY THE ENGINEER IN ORDER TO ACCOMMODATE INLET AND OUTLET PIPES.

(I) CONCRETE JOINT MATERIAL TO BE 13 mm PREMOLDED FIBER IN ACCORDANCE WITH SECTION 905 OF STANDARD SPECIFICATIONS.

(J) PAYMENT FOR CATCH BASIN WILL BE MADE UNDER ITEM NUMBERS 611M39.01 CATCH BASINS, TYPE 39, 0m-1m DEPTH THROUGH 611M39.09 CATCH BASINS, TYPE 39, > 8m-9m DEPTH PER EACH. WHEN CONCRETE APRON IS USED, IT IS TO BE INCLUDED IN THE PRICE BID PER CATCH BASIN.

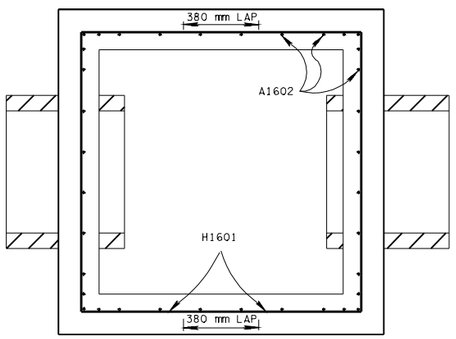

SECTION E-E

CATCH BASIN PIPE SIZE TABLE

MAX INLET OR OUTLET CONC. PIPE SIZE-STR. (mm)	MAX INLET OR OUTLET CONC. PIPE SIZE-90° (mm)
900	750

CATCH BASIN MAXIMUM DEPTH NOTE

MAXIMUM DEPTH FOR THIS STRUCTURE IS 8.5 m. WHEN DEPTH REQUIREMENTS EXCEED THIS DEPTH THE CONTRACTOR IS TO USE OTHER VERSIONS OF THE NO. 39 CATCH BASIN.

CATCH BASIN MINIMUM DEPTH TABLE

INSIDE DIAMETER (X) OF PIPE (mm)	MINIMUM DEPTH - (m)		
	CONCRETE PIPE	CORRUGATED METAL PIPE	POLYETHYLENE PIPE
450	0.91	0.85	0.89
600	1.07	1.01	1.05
750	1.24	1.16	1.23
900	1.41	1.32	1.38

(1) DEPTH MEASUREMENT MADE FROM TOP OF GRATE TO OUTLET FLOW ELEVATION BASED ON INLET AND OUTLET PIPES BEING THE SAME DIAMETER, IF OUTLET PIPE IS GREATER ADJUSTMENT IN DEPTHS MUST BE MADE TO ACCOMMODATE THIS SITUATION.

(2) MINIMUM DEPTH TO BE REDUCED BY 35 mm WHERE ONLY OUTLET PIPE EXIST.

(3) TO DETERMINE FLOOR OF CATCH BASIN ELEVATION, WHEN INLET AND OUTLET PIPES ARE THE SAME SIZE, ADD PIPE WALL THICKNESS PLUS 40 mm TO THE ABOVE MINIMUM DEPTHS.

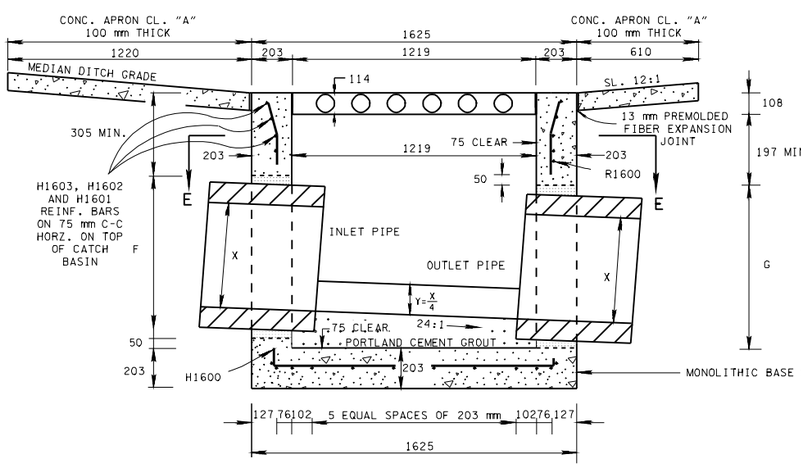

SECTION A-A

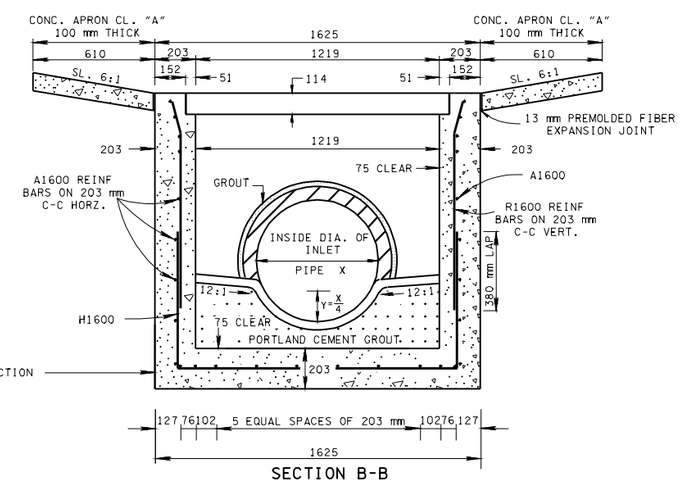

SECTION B-B

CUT-OUT HOLES FOR INLET & OUTLET PIPES

INSIDE DIAMETER (X) OF PIPE (mm)	DIAMETER OF CUT-OUT HOLES F & G - (mm)		
	CONCRETE PIPE	CORRUGATED METAL PIPE	POLYETHYLENE PIPE
450	660	535	610
600	815	685	785
750	1015	840	990
900	1195	1015	1145

(1) CUT-OUT HOLES FOR PRECAST STRUCTURES TO BE CORED OR FORMED IN ORDER TO OBTAIN A SMOOTH EDGED HOLE. SCORED OR ETCHED HOLES WITH REINFORCING STEEL LEFT UNCUT WILL NOT BE PERMITTED.

TENNESSEE METRIC D.O.T.

ALL UNITS ARE IN MILLIMETERS UNLESS NOTED OTHERWISE.

☐ MINOR REVISION -- FHWA APPROVAL NOT REQUIRED.

STATE OF TENNESSEE
DEPARTMENT OF TRANSPORTATION

STANDARD
1219 mm x 1219 mm
SQUARE
CONCRETE NO.39
CATCH BASIN

1-19-98 | DM-CB-39S