REV. 11-1-95: CHANGED TO METRIC.

REV. 1-19-97: GENERAL REVISION TO DRAWING.

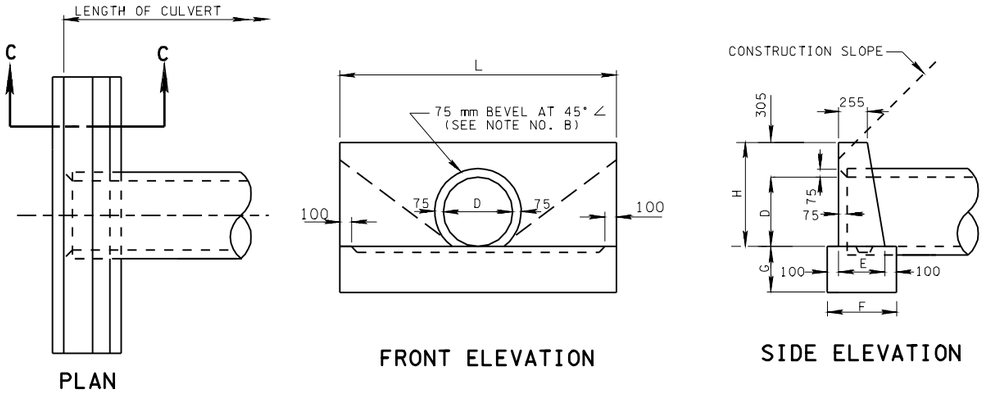

PLAN

FRONT ELEVATION

SIDE ELEVATION

STRAIGHT TYPE CONCRETE ENDWALL

TABLE OF DIMENSIONS AND ESTIMATED QUANTITIES FOR ONE STRAIGHT CONCRETE ENDWALL (SKEW 90°)

DIMENSIONS							CONC. IN ONE ENDWALL			m^3 FOR EACH ADDITIONAL LINE OF PIPE	m^3 PER METER OF LENGTH "L"		
OPENING		WALL			FOOTING		WALL	FOOTING	TOTAL				
D (mm)	AREA (m^2)	L	H	E	F	G	m^3	m^3	m^3		WALL	FOOTING	TOTAL
457	0.164	1830	762	385	585	380	0.39	0.41	0.80	0.30	0.241	0.223	0.464
610	0.292	2440	915	410	610	405	0.63	0.60	1.23	0.40	0.301	0.248	0.549
762	0.456	3050	1067	460	660	455	0.99	0.92	1.91	0.57	0.379	0.304	0.682

ESTIMATED QUANTITIES FOR TWO STRAIGHT CONCRETE ENDWALLS WHEN PIPE IS SKEWED (m^3)

D (mm)	SKEW											
	30°	35°	40°	45°	50°	55°	60°	65°	70°	75°	80°	85°
457	3.17	2.76	2.47	2.24	2.07	1.93	1.83	1.75	1.69	1.64	1.61	1.59
610	4.93	4.30	3.84	3.49	3.22	3.01	2.85	2.72	2.62	2.55	2.51	2.48
762	7.62	6.64	5.93	5.39	4.97	4.65	4.40	4.21	4.05	3.95	3.87	3.82

NOTE: WHEN PIPE IS ON A SKEW USE TWO STRAIGHT ENDWALLS AND MAKE "L" EQUAL TO " L " IN TABLE ABOVE DIVIDED BY SINE OF ANGLE OF SKEW.

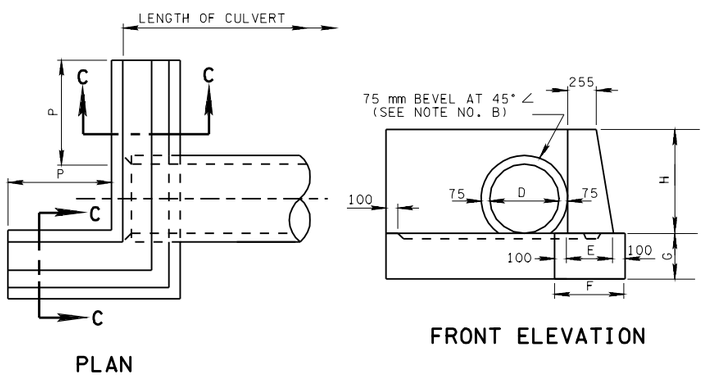

PLAN

FRONT ELEVATION

" L " TYPE CONCRETE ENDWALL

ESTIMATED QUANTITIES FOR ONE " L" TYPE CONCRETE ENDWALL

DIAMETER	P	CONC. m^3
457	685	0.98
610	915	1.46
762	1145	2.22

NOTE: DIMENSIONS NOT SHOWN ARE SAME AS FOR STRAIGHT ENDWALL.

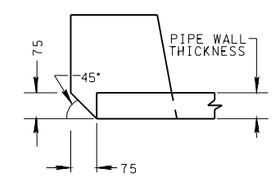

DETAIL OF BEVEL

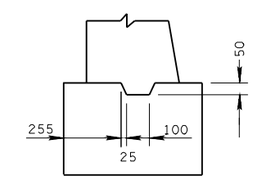

SECTION C- C
SHOWING CONSTRUCTION JOINT

GENERAL NOTES

(A) CONCRETE ENDWALL SHALL BE CONSTRUCTED IN ACCORDANCE WITH STANDARD SPECIFICATION, SECTION 611, AND/OR SPECIAL PROVISIONS.

(B) ALL STRAIGHT AND " L " TYPE CONCRETE ENDWALLS ON INLET END OF PIPE, AND AT 90° SKEW SHALL BE BEVELED AT 75 mm AT 45° ANGLE. BEVEL WILL NOT BE REQUIRED WHEN ENDWALL IS CONSTRUCTED ON THE " BELLED " END OF CONCRETE PIPE.

(C) WHEN MORE THAN ONE LINE OF PIPE IS REQUIRED THE DISTANCE FROM CENTER TO CENTER OF PIPE SHALL BE D + 300 mm.

(D) PAYMENT FOR ENDWALLS WILL BE MADE FOLLOWS:
ITEM 611M07.01, CLASS "A" CONCRETE (PIPE ENDWALLS)----CUBIC METER.
ITEM 611M07.02, STEEL BAR REINFORCING (PIPE ENDWALLS)----KILOGRAM.

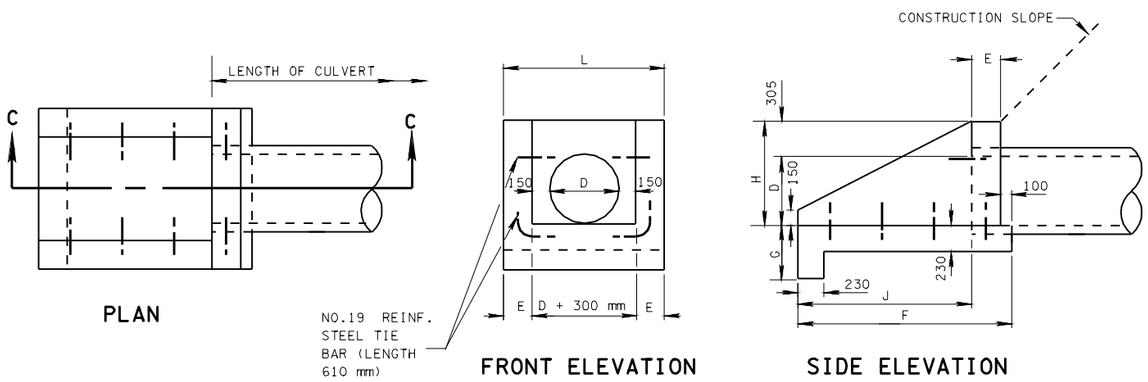

PLAN

FRONT ELEVATION

SIDE ELEVATION

" U " TYPE CONCRETE ENDWALL

TABLE OF DIMENSIONS AND ESTIMATED QUANTITIES FOR ONE " U " TYPE CONCRETE ENDWALL (SLOPE 1.5:1 & 2:1)

DIMENSIONS								CONC.IN ONE ENDWALL			m^3 FOR EACH ADDITIONAL LINE OF PIPE	m^3 PER METER OF LENGTH "L"	REINF STEEL kg
OPENING		WALL			FOOTING			m^3	m^3	m^3			
D (mm)	AREA (m^2)	L	H	E	J	F	G	WALL	FOOTING	TOTAL			
457	0.164	1217	762	230	1220	1550	380	0.47	0.47	0.94	0.424	0.564	9
610	0.292	1420	915	255	1525	1880	455	0.66	0.69	1.35	0.557	0.690	9
762	0.456	1572	1067	255	1830	2185	455	0.86	0.87	1.73	0.762	0.823	9

NOTE: USE " U " TYPE ENDWALL SHOWN ON STANDARD DRAWINGS DM-PE-3B (FOR 3:1 SLOPES), DM-PE-4B (FOR 4:1 SLOPES) AND DM-PE-6B (FOR 6:1 SLOPE) WITHOUT GRATES OUTSIDE THE CLEAR ZONE.

TENNESSEE METRIC D.O.T.

ALL UNITS ARE IN MILLIMETERS UNLESS NOTED OTHERWISE.

MINOR REVISION -- FHWA APPROVAL NOT REQUIRED.

STATE OF TENNESSEE
DEPARTMENT OF TRANSPORTATION

STRAIGHT, " L " & " U " TYPE CONCRETE ENDWALL

11-1-95 | DM-PE-4