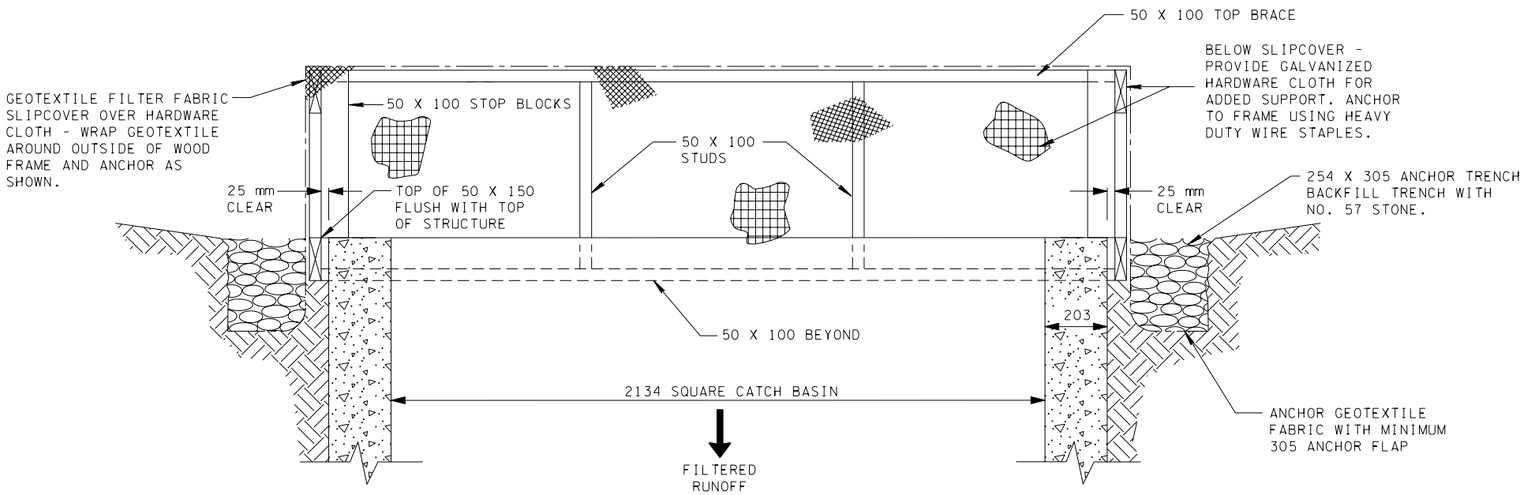

SECTION A-A

N.T.S.

SLIPCOVER FILTER SPECIFICATIONS		
FABRIC TYPE : NON-WOVEN, NEEDLE-PUNCHED GEOTEXTILE		
FABRIC PROPERTY	ASTM TEST METHOD	MINIMUM AVERAGE ROLL VALUES (MARVS)
GRAB TENSILE STRENGTH	ASTM D4632	≥82 kg
GRAB ELONGATION	ASTM D4632	≥50%
MULLEN BURST	ASTM D3786	≥2275 kPa
PUNCTURE STRENGTH	ASTM D4833	≥48 kg
TRAPEZOIDAL TEAR	ASTM D4533	≥34 kg
APPARENT OPENING SIZE (AOS)	ASTM D4751	FINER THAN OR EQUAL TO 0.180 mm STANDARD SIEVE
PERMEABILITY	ASTM D4491	≥0.003 m/s
PERMITTIVITY	ASTM D4491	≥1.5 SEC^{-1}
WATER FLUX	ASTM D4491	≥4480 $L/MIN/m^2$
UV RESISTANCE	ASTM D4355	≥70% AT 500 HOURS
WEIGHT	ASTM D3776	MINUMUM 0.203 kg/m^2

HARDWARE CLOTH SPECIFICATIONS	
STANDARD SPECIFICATION	ASTM A740
OPENING SIZE	13 mm X 13 mm
WIRE SIZE	19 GAUGE (1.06 mm)
WIRE DIAMETER	1 mm
WEIGHT	1.0 kg/m^2
GRADE	LOW CARBON STEEL (C1008)
TYPE	WELDED HOT GALVANIZED STEEL WIRE FABRIC

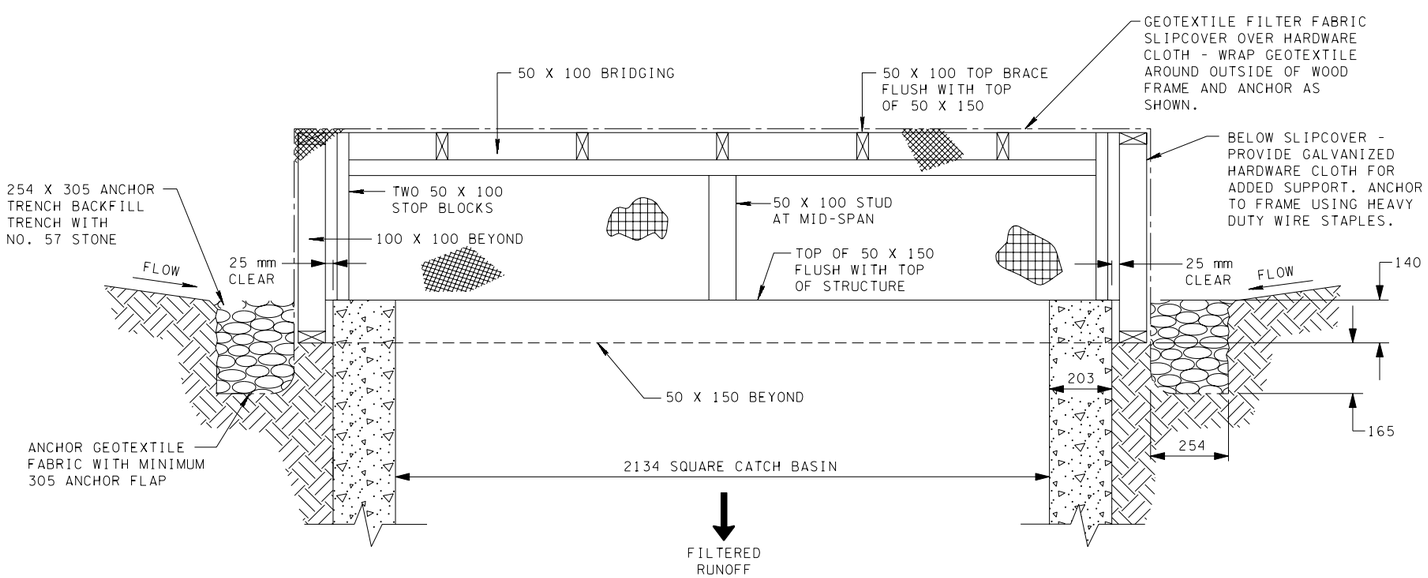

SECTION B-B

N.T.S.

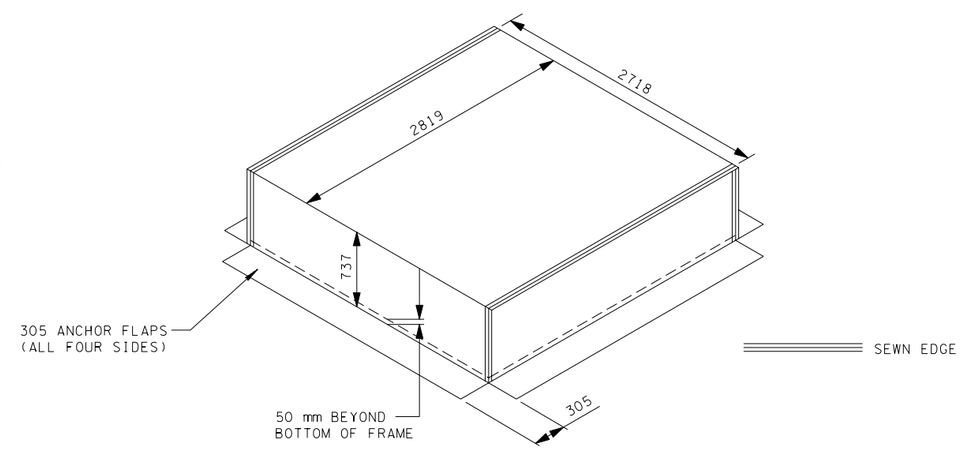

GEOTEXTILE SLIPCOVER FABRICATION

N.T.S.

FABRICATION SPECIFICATIONS:

1. GEOTEXTILE SLIPCOVER FABRIC SHALL HAVE HEAT-CUT FUSING FABRIC EDGES FOR STRENGTH.
2. ALL SEAMS SHALL BE SEWN WITH TWO INDEPENDENT ROWS OF LOCK-TYPE STITCHING, USING UV-BONDED POLYESTER THREAD (MINIMUM OF 63 kg) WITH MINIMUM OF SIX STITCHES PER EVERY 25 MILLIMETERS.
3. THE INSIDE ROW OF STITCHING SHALL BE A MINIMUM OF 13 mm FROM HEAT-CUT FABRIC EDGES.

EROSION CONTROL PLAN LEGEND: (4) CATCH BASIN FILTER ASSEMBLY (TYPE 4)

TENNESSEE METRIC D.O.T.

ALL UNITS ARE IN MILLIMETERS UNLESS NOTED OTHERWISE.

STATE OF TENNESSEE
DEPARTMENT OF TRANSPORTATION

CATCH BASIN FILTER ASSEMBLY (TYPE 4) SLIPCOVER DETAILS

4-15-04 ECM-STR-44A