Stage	By	Date
REC/TDOT CAD DWG		1-5-95
INITIAL MARKUP	S.W.	1-23-95
REVIEW MARKUP	B.B.	1-24-95
TO CAD	M.R.	1-25-95
REVIEW CAD DW	B.B.	1-30-95
TO CAD	B.B.	1-31-95
REVIEW CAD DW	J.M.	2-1-95
TRANS TDOT		3-10-95
REC TDOT COMNTS		3-24-95
FINAL CAD	B.B.	3-24-95
FINAL REVIEW	F.S.	3-30-95
TRANS FINAL		3-30-95

REV. 11-1-95: CHANGED TO METRIC.

REV. 5-27-01: CHANGED FOOTNOTES (6) AND (7).

STONE MASONRY CONSTRUCTION AND MATERIALS SHALL MEET THE REQUIREMENTS OF TENN. STD. SPECIFICATION SECTION 612. THE WALL IS TO BE RUSTIC STONE TYPE, UNLESS OTHERWISE STATED IN THE PLANS.

PAYMENT FOR PROPOSED MASONRY GRAVITY RETAINING WALLS WILL BE MADE AS SPECIFIED IN TENNESSEE STANDARD SPECIFICATIONS, SECTION 612 --- STONE MASONRY PER CUBIC METER.

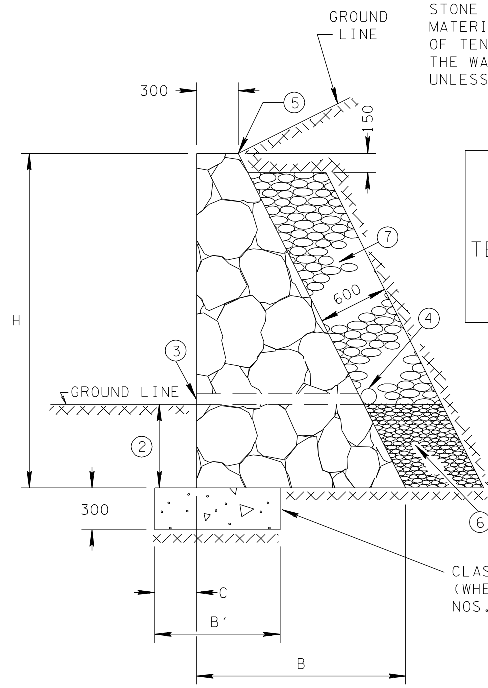

MASONRY GRAVITY RETAINING WALLS

CLASS "A" CONCRETE CONSTRUCTION AND MATERIALS SHALL MEET THE REQUIREMENTS OF TENN. STD. SPECIFICATION SECTION 604. THE WALL IS TO BE CLASS "A" CONCRETE.

PAYMENT FOR PROPOSED CONCRETE GRAVITY RETAINING WALLS WILL BE MADE UNDER ITEM NO. 604M01.01, CLASS "A" CONCRETE (ROADWAY) PER CUBIC METER.

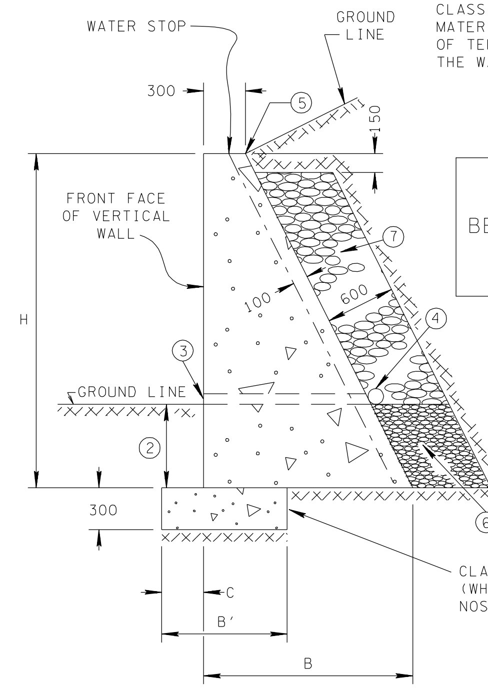

CONCRETE GRAVITY RETAINING WALLS

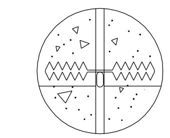

WATER STOP DETAIL

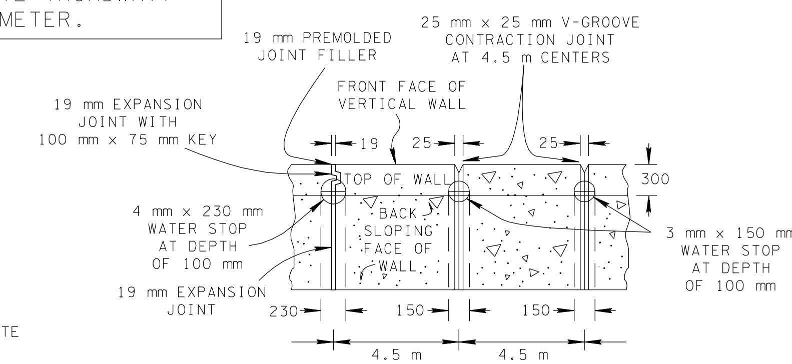

CONTRACTION JOINTS ARE TO BE PLACED AT 4.5 m INTERVALS. EXPANSION JOINTS ARE TO BE PLACED AT INTERVALS NOT EXCEEDING 27 m. WATER STOPS ARE TO BE ELASTOMERIC OR OTHER APPROVED MATERIALS. DIMENSIONS SHOWN ARE ABSOLUTE MINIMUM.

CONCRETE GRAVITY RETAINING WALL EXPANSION AND CONTRACTION JOINT DETAIL

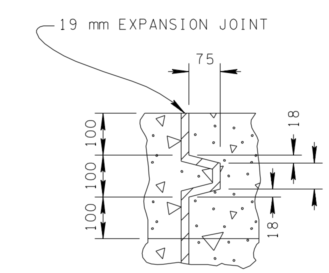

KEY DETAIL

GRAVITY WALL DIMENSION AND QUANTITY TABLE

H (m)	B (m)	B′ (m)	C (m)	(1) F_T (kPa)	F_B (kPa)	V_W (m^3/m)	V_S (m^3/m)
0.6	0.30	0.00	0.000	29	—	0.186	—
0.9	0.51	↑	↑	41	—	0.371	—
1.2	0.69			53	—	0.605	—
1.5	0.89			65	—	0.911	—
1.8	1.07			77	—	1.254	—
2.1	1.24			89	—	1.653	—
2.4	1.45			101	—	2.137	—
2.7	1.60			113	—	2.614	—
3.0	1.80	↓	↓	124	—	3.213	—
3.4	1.98	0.00	0.00	136	144	3.833	—
3.7	2.16	0.30	0.08	148	↑	4.505	0.093
4.0	2.34	0.38	0.08	161		5.232	0.115
4.3	2.51	0.69	0.08	173		6.015	0.208
4.6	2.72	0.99	0.08	185		6.911	0.301
4.9	2.90	1.30	0.10	197		7.804	0.394
5.2	3.07	1.63	0.15	209		8.752	0.497
5.5	3.25	1.96	0.23	221		9.755	0.605
5.8	3.43	2.34	0.30	233	↓	10.811	0.712
6.0	3.61	2.69	0.38	245	144	11.922	0.820

SEE SPECIAL NOTE BELOW (rows H = 2.1 to 6.0)

SPECIAL NOTE

GRAVITY-TYPE RETAINING WALLS GREATER THAN 1.8 m IN HEIGHT ARE GENERALLY CONSIDERED UNECONOMICAL. USE OF GRAVITY WALLS SHALL BE DETERMINED BY COST COMPARISONS WITH OTHER TYPES OF RETAINING WALLS AFTER ALLOWABLE BEARING STRESSES HAVE BEEN RECEIVED FROM THE SOILS AND GEOLOGY SECTION.

FOOTNOTES

(1) DESIGN IS BASED ON ALLOWABLE BEARING STRESS AT BASE OF WALL BEING EQUAL TO OR GREATER THAN F_T. WHEN ALLOWABLE BEARING STRESS IS LESS THAN F_T, AS DESIGNATED BY THE SOILS AND GEOLOGY SECTION, THEN A CLASS "A" CONCRETE SPREADER IS TO BE USED. IF ALLOWABLE BEARING STRESS CAN BE ESTABLISHED BY THE ENGINEER TO BE EQUAL TO OR GREATER THAN F_T, THEN THE SPREADER IS NOT REQUIRED.

(2) BASE OF WALL OR SPREADER, IF USED, IS TO BE BELOW THE FROST LINE UNLESS WALL IS PLACED ON SOLID ROCK FOUNDATION. IF WALL ONLY IS USED, PLACE BOTTOM 600 mm OF WALL BELOW THE GROUND LINE. IF WALL AND SPREADER ARE USED, PLACE BOTTOM OF SPREADER 600 mm BELOW THE GROUND LINE.

(3) 100 mm DIAMETER WEEP HOLES AT 3 m CENTER-TO-CENTER MAXIMUM ARE TO BE PLACED AT THE LOWEST POINT PRACTICAL FOR PROPER DRAINAGE. THE ENGINEER WILL DETERMINE BOTH HORIZONTAL AND VERTICAL SPACING OF WEEP HOLES. PIPE IS TO BE PAID FOR UNDER THE PRICE BID FOR OTHER ITEMS OF CONSTRUCTION.

(4) 150 mm DIAMETER PERFORATED CORRUGATED METAL PIPE IS TO BE CONNECTED TO AN OUTLET PIPE AT LOW POINTS AND AT A MAXIMUM SPACING OF 60 m. PIPE IS TO BE PAID FOR UNDER THE PRICE BID FOR OTHER ITEMS OF CONSTRUCTION.

(5) THE TREATMENT AT TOE OF FILL IS TO BE DETERMINED ACCORDING TO THE VOLUME AND VELOCITY OF THE RUNOFF (SEE ROADWAY PLANS).

(6) GRANULAR BACKFILL BEHIND PROPOSED GRAVITY RETAINING WALL AND BELOW FLOW LINE OF OUTLET PIPES IS TO BE PAID FOR UNDER ITEM NO. 303M01.03, GRANULAR BACKFILL (RETAINING WALLS) FOR STRUCTURES PER TONNE.

(7) GRANULAR BACKFILL BEHIND PROPOSED GRAVITY RETAINING WALL AND ABOVE FLOW LINE OF OUTLET PIPES IS TO BE PAID FOR UNDER ITEM NO. 303M10.03, MINERAL AGGREGATE (SIZE 68) PER TONNE. THE CONTRACTOR MAY SUBSTITUTE AGGREGATE CONFORMING TO SIZE 7, 78, OR 8, IF APPROVED BY THE ENGINEER.

(8) CLASS "A" CONCRETE SPREADER IS TO BE PAID FOR UNDER ITEM No. 604M01.01, CLASS "A" CONCRETE (ROADWAY) PER CUBIC METER.

LEGEND

- B = WIDTH AT BASE OF GRAVITY WALL
- B′ = WIDTH OF CLASS "A" CONCRETE SPREADER
- C = DISTANCE FROM BASE OF SPREADER TO FRONT OF GRAVITY WALL
- H = HEIGHT OF WALL FROM BASE TO TOP INCLUDING ANY PORTION BELOW GROUND
- F_B = BEARING STRESS AT BASE OF CLASS "A" CONCRETE SPREADER
- F_T = BEARING STRESS AT BASE OF GRAVITY WALL (STONE AND MORTAR OR CLASS "A" CONCRETE)
- V_S = VOLUME OF CLASS "A" CONCRETE SPREADER
- V_W = VOLUME OF GRAVITY WALL (STONE AND MORTAR OR CLASS "A" CONCRETE)

TENNESSEE METRIC D.O.T.

ALL UNITS ARE IN MILLIMETERS UNLESS NOTED OTHERWISE.

MINOR REVISION -- FHWA APPROVAL NOT REQUIRED.

STATE OF TENNESSEE
DEPARTMENT OF TRANSPORTATION

STANDARD GRAVITY-TYPE RETAINING WALLS

11-1-95 | ELM-W-2

3/21/2007 11:27:06 AM $$$$DGNSPEC$$$$$$$$$$$$$$$$$$$$$$$$

$$$$USERNAME