REV. 11-1-95: CHANGED TO METRIC.

LATERAL UNDERDRAIN ENDWALL DETAIL FOR 3:1 SLOPES

(ITEM NO. 710M06.12)

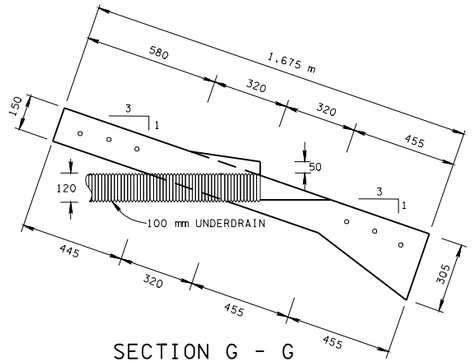

SECTION G - G

MATERIAL SPECIFICATIONS

Ⓐ FOR SPECIFICATIONS SEE "STANDARD SPECIFICATION FOR ROAD AND BRIDGE CONSTRUCTION" OF THE TENNESSEE DEPARTMENT OF TRANSPORTATION.

Ⓑ ALL CONCRETE TO BE CLASS "A" CONCRETE F_C = 21 MPa AT 28 DAYS.

Ⓒ ALL REINFORCING STEEL TO MEET ASTM A615M SPECIFICATION, F_y = 400 MPa.

LATERAL UNDERDRAIN ENDWALL DETAIL FOR 4:1 SLOPES

(ITEM NO. 710M06.13)

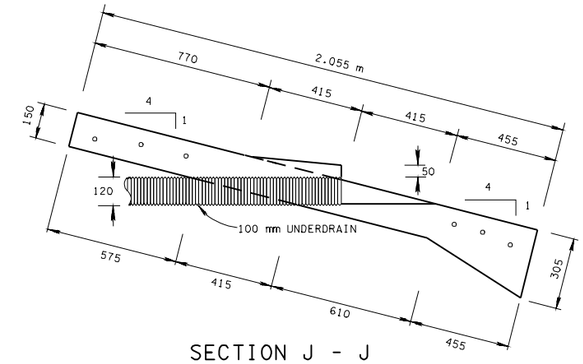

SECTION J - J

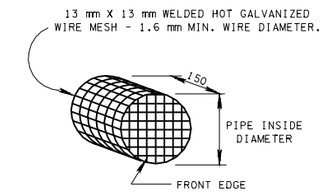

DETAIL OF RODENT SCREEN

① INSTALL FRONT EDGE OF RODENT SCREEN 150 mm UP INTO PIPE.
② TO BE INCLUDED IN THE PRICE BID FOR THE LATERAL ENDWALL.

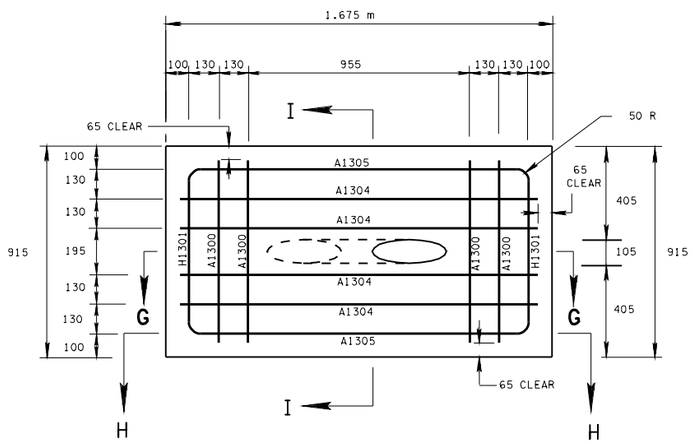

PLAN VIEW

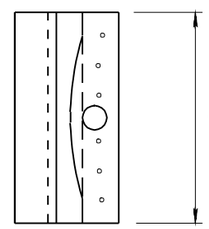

SECTION I - I

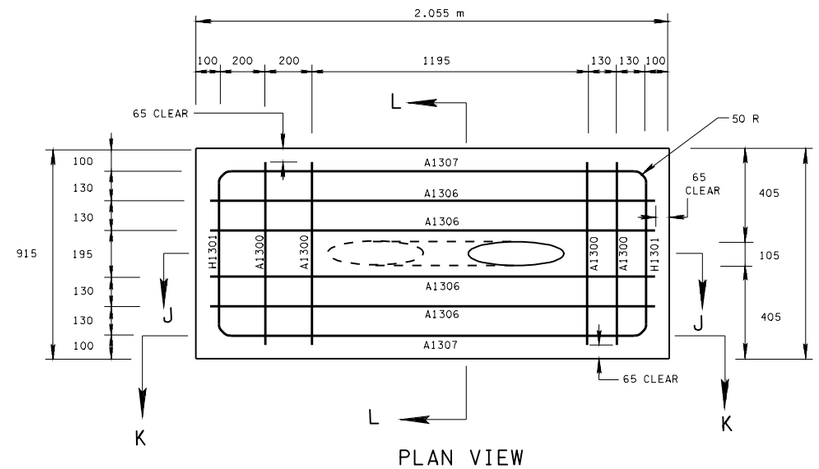

PLAN VIEW

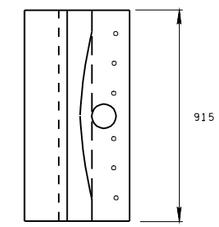

SECTION L - L

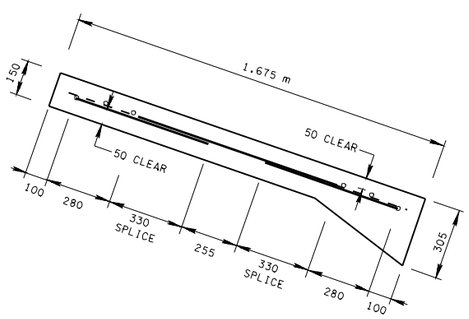

SECTION H - H

A1300 SERIES
(SEE TABLE FOR LENGTH)

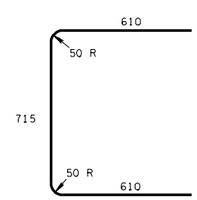

H1301

A1300 SERIES	
CODE	LENGTH
A1300	785
A1301	1090
A1302	1315
A1303	685
A1304	1545
A1305	915
A1306	1925
A1307	1395
A1308	2385
A1309	1855
A1310	2765
A1311	2235

STEEL REINFORCING BAR TABLE

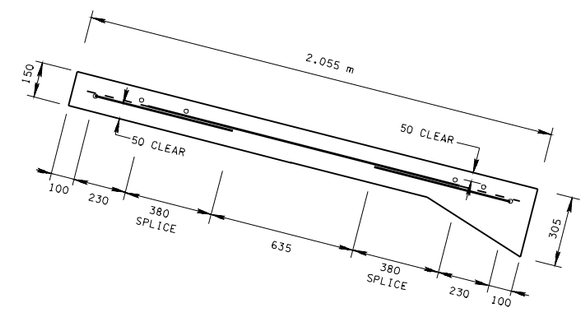

SECTION K - K

TENNESSEE METRIC D.O.T.

ALL UNITS ARE IN MILLIMETERS UNLESS NOTED OTHERWISE.

☐ MINOR REVISION -- FHWA APPROVAL NOT REQUIRED.

STATE OF TENNESSEE
DEPARTMENT OF TRANSPORTATION

LATERAL UNDERDRAIN ENDWALL DETAIL FOR 3 : 1 & 4 : 1 SLOPES

11-1-95

RDM-UD-7