REV. 11-1-95: CHANGED TO METRIC.

REV. 10-26-00: CHANGED WIDTH AND DEPTH OF SAWED GROOVED CONTRACTION JOINT.

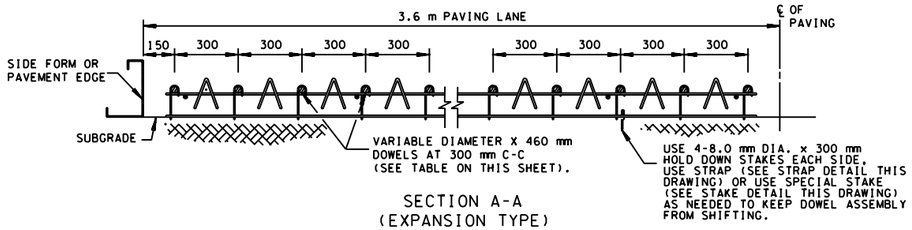

SECTION A-A
(EXPANSION TYPE)

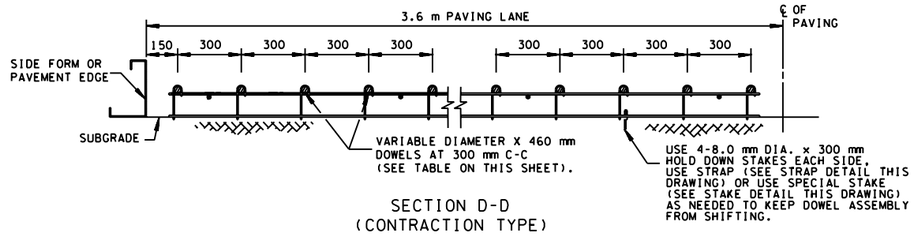

SECTION D-D
(CONTRACTION TYPE)

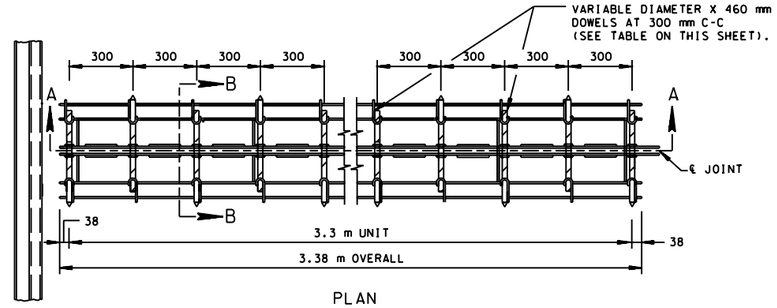

PLAN
WELDED DOWEL ASSEMBLY EXPANSION
TYPE U

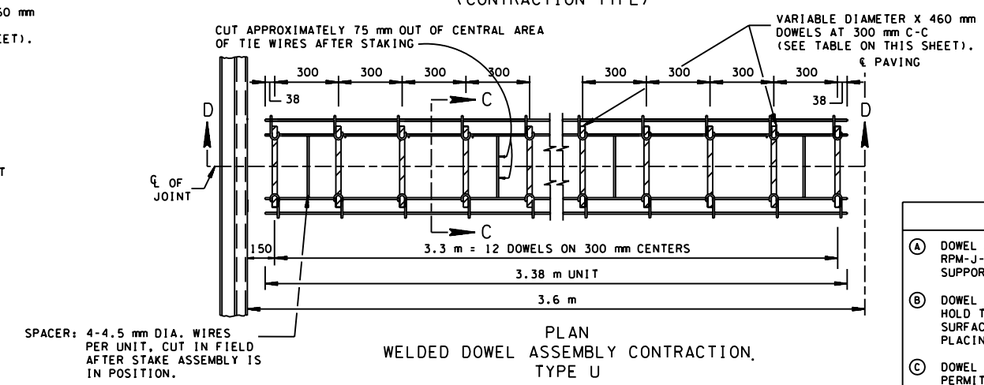

PLAN
WELDED DOWEL ASSEMBLY CONTRACTION
TYPE U

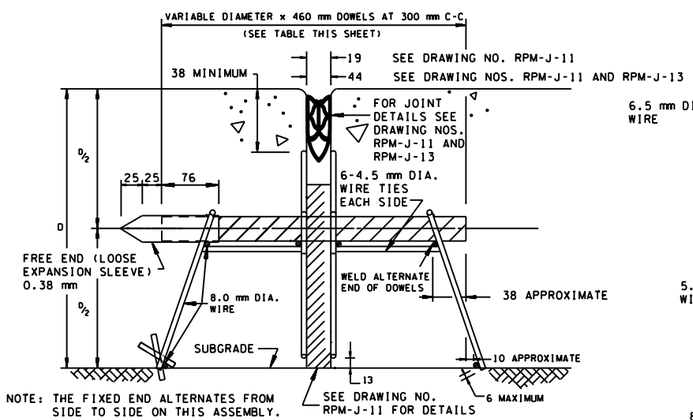

SECTION B-B
(EXPANSION TYPE)

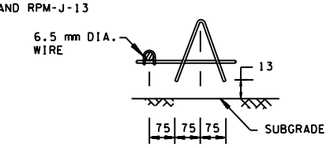

JOINT HOLDER

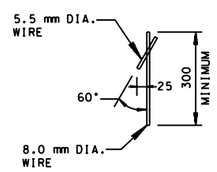

STAKE DETAIL

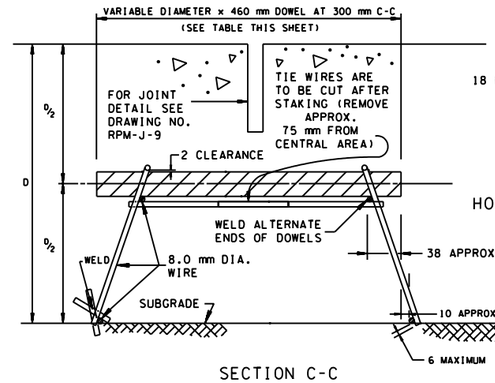

SECTION C-C
(CONTRACTION TYPE)

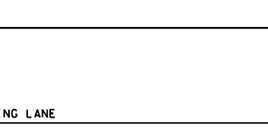

HOOK DETAIL

GENERAL NOTES

(A) DOWEL ASSEMBLY DEVICES OTHER THAN SHOWN ON DRAWING NOS. RPM-J-17, RPM-J-18 AND RPM-J-19 MAY BE USED FOR SUPPORTING DOWELS AT EXPANSION AND CONTRACTION JOINTS.

(B) DOWEL ASSEMBLY DEVICES SHALL BE SO CONSTRUCTED AS TO HOLD THE DOWEL BARS FIRMLY IN POSITION PARALLEL TO THE SURFACE AND CENTERLINE OF THE PAVEMENT SLAB DURING THE PLACING OF CONCRETE.

(C) DOWEL ASSEMBLY DEVICES SHALL BE OF SUCH DESIGN AS TO PERMIT UNRESTRICTED MOVEMENT OF THE PAVEMENT SLAB.

(D) DOWEL ASSEMBLY DEVICES TO BE USED MUST BE APPROVED BY THE ENGINEER PRIOR TO THEIR USE.

(E) SEE STANDARD SPECIFICATIONS FOR ROAD AND BRIDGE CONSTRUCTION, SECTION 501-PORTLAND CEMENT CONCRETE PAVEMENT FOR DOWEL ASSEMBLY DEVICES. ALSO SEE APPLICABLE SPECIAL PROVISIONS.

(F) DOWEL ASSEMBLY DEVICES ARE TO BE FURNISHED IN SECTIONS WITH SUITABLE LENGTHS FOR VARIOUS WIDTHS OF PAVEMENT.

(G) ONE OF THE ALTERNATE DOWEL ASSEMBLY DEVICES WILL BE REQUIRED AT EACH EXPANSION JOINT WITH LOAD TRANSFERS UNLESS A BULKHEAD IS USED. SEE DRAWING NOS. RPM-J-17, RPM-J-18 AND RPM-J-19 FOR ALTERNATE DOWEL BAR AND DOWEL ASSEMBLY DETAILS AND SPECIFICATIONS.

(H) SEE DRAWING NOS. RPM-J-9 AND RPM-J-11 FOR ADDITIONAL INFORMATION NOT SHOWN ON THIS SHEET.

DOWEL BAR SIZE TABLE

PAVEMENT THICKNESS (mm)	BAR DIAMETER (mm)
230	32
250	32
280	35
300	38
330	41
360	44

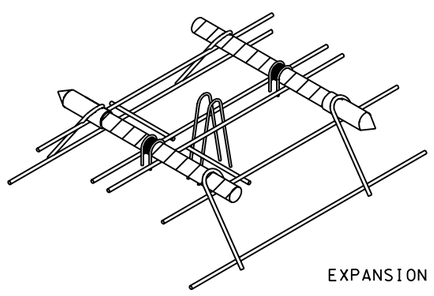

EXPANSION JOINT

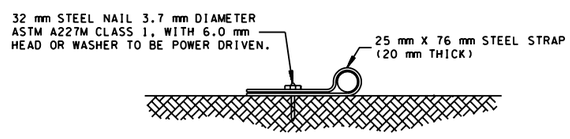

STRAP DETAIL

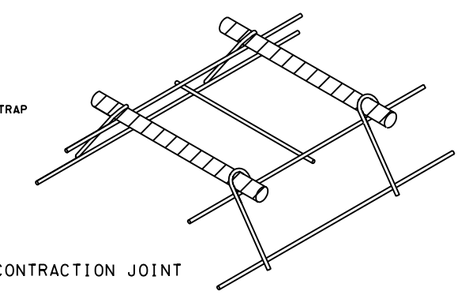

CONTRACTION JOINT

ALL UNITS ARE IN MILLIMETERS UNLESS NOTED OTHERWISE.

MINOR REVISION -- FHWA APPROVAL NOT REQUIRED.

CROSS-REFERENCE DRAWING FOR THIS SHEET: RPM-J-9, RPM-J-11, RPM-J-13, RPM-J-17 AND RPM-J-18.

STATE OF TENNESSEE
DEPARTMENT OF TRANSPORTATION

DOWEL ASSEMBLY DEVICES

11-1-95 | RPM-J-19

2/24/2005 DGNSPEC

rpmj19.dgn 2/24/2005 10:28:14 AM