REV. 11-1-95: CHANGED TO METRIC.

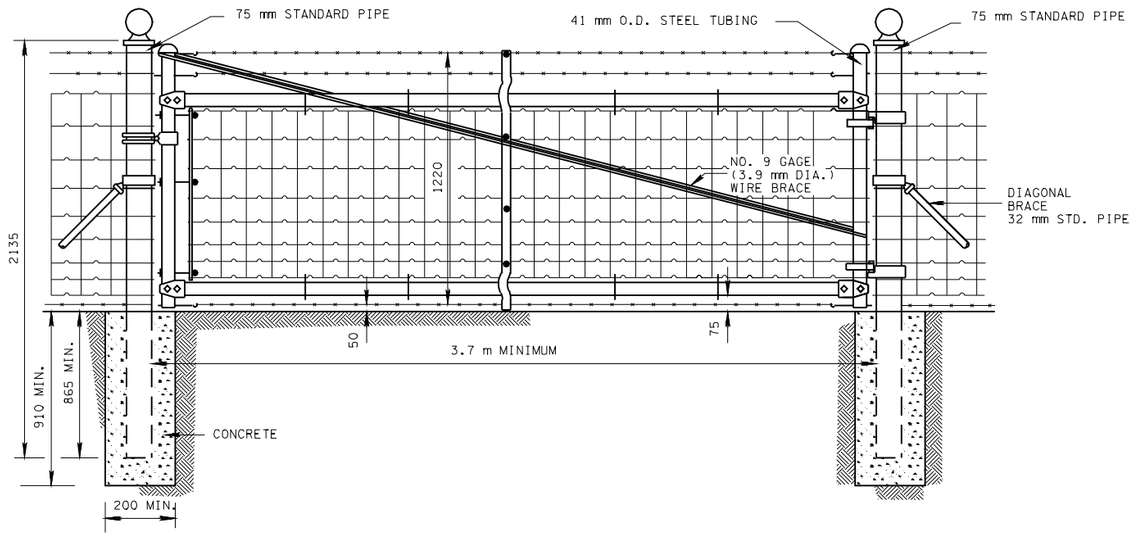


STOCK FENCE DRIVE GATE

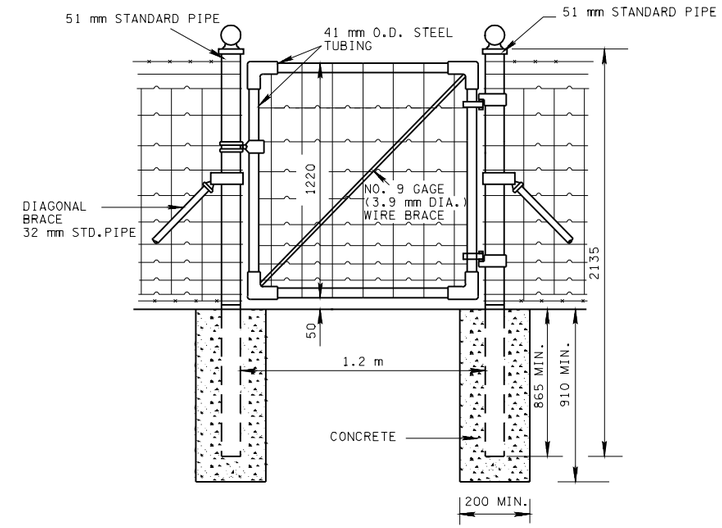


STOCK FENCE WALK GATE

## DESCRIPTION

STOCK FENCE DRIVE GATE SHALL BE A TUBULAR STEEL FRAME 1.2 m HIGH AND OF SPECIFIED LENGTH WITH WIRE FABRIC FILLER WITHIN THE GATE FRAME, AND WITH TWO STRANDS OF BARBED WIRE ABOVE THE FRAME AND ONE STRAND OF BARBED WIRE BELOW THE FRAME, AND SHALL BE CONSTRUCTED OF THE MATERIALS INDICATED BELOW.

STOCK FENCE WALK GATE SHALL BE A TUBULAR STEEL FRAME 1.2 m HIGH AND 1.2 m LONG WITH WIRE FABRIC FILLER WITHIN THE GATE FRAME, AND SHALL BE CONSTUCTED OF THE MATERIALS INDICATED BELOW.

## MATERIALS

DRIVE GATE: THE GATE SHALL CONSIST OF 41 mm O.D. HIGH CARBON STEEL TUBING FASTENED AT EACH CORNER WITH MALLEABLE IRON OR PRESSED STEEL FITTINGS BOLTED TO THE TUBULAR FRAME. THE GATE FRAME SHALL BE BRACED VERTICALLY AT THE CENTER WITH TWO 25 mm X 25 mm ANGLE IRONS OR TWO 10 mm X 19 mm CHANNEL IRONS BOLTED TOGETHER, AND SHALL BE BRACED DIAGONALLY WITH A NO. 9 (3.9 mm DIA.) GALVANIZED WIRE BRACE ATTACHED IN A MANNER TO PROVIDE ADJUSTMENT. GATES MORE THAN 3.7 m IN LENGTH SHALL HAVE TWO EQUALLY SPACED VERTICAL BRACES. THE END MEMBERS OF THE GATE FRAME SHALL BE PROVIDED WITH METAL CAPS.

WALK GATE: THE WALK GATE SHALL CONSIST OF 41 mm O.D. HIGH CARBON STEEL TUBING FASTENED AT EACH CORNER WITH MALLEABLE IRON OR PRESSED STEEL FITTINGS ATTACHED IN A MANNER SATISFACTORY TO THE THE ENGINEER. THE FRAME SHALL BE BRACED DIAGONALLY WITH A NO. 9 (3.9 mm DIA.) GALVANIZED WIRE BRACE ATTACHED IN A MANNER TO PROVIDE ADJUSTMENT.

## CONSTRUCTION

GATES SHALL BE INSTALLED AT THE LOCATIONS INDICATED IN THE PLANS OR AS DIRECTED BY THE ENGINEER. THE GATE SHALL BE INSTALLED BETWEEN AND FASTENED TO PROPERLY SPACED GATE POSTS, WHICH SHALL BE SET IN THE GROUND A FULL 860 mm. THE POSTS AND BRACES SHALL BE SET IN CONCRETE BASES WHICH SHALL BE AT LEAST 200 mm IN DIAMETER AND SHALL EXTEND 910 mm OR MORE BELOW THE SURFACE OF THE GROUND.

## PAYMENT WILL BE MADE UNDER :

ITEM NO. 707M03.20 GATE (STOCK FENCE) (DESCRIPTION) PER EACH
ITEM NO. 707M03.21 GATE (STOCK FENCE) (DESCRIPTION) PER EACH
ETC. FOR VARIOUS DESCRIPTIONS.

TENNESSEE METRIC D.O.T.

ALL UNITS ARE IN MILLIMETERS UNLESS NOTED OTHERWISE.

MINOR REVISION -- FHWA APPROVAL NOT REQUIRED.

STATE OF TENNESSEE
DEPARTMENT OF TRANSPORTATION

STANDARD
STOCK FENCE
GATE

11-1-95 | SM-FG-11