REV. 11-1-95: CHANGED TO METRIC.

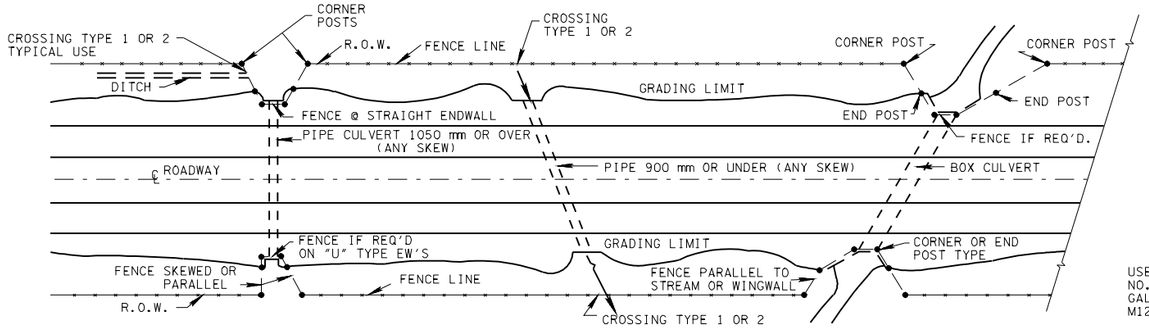

TYPICAL LOCATION PLAN

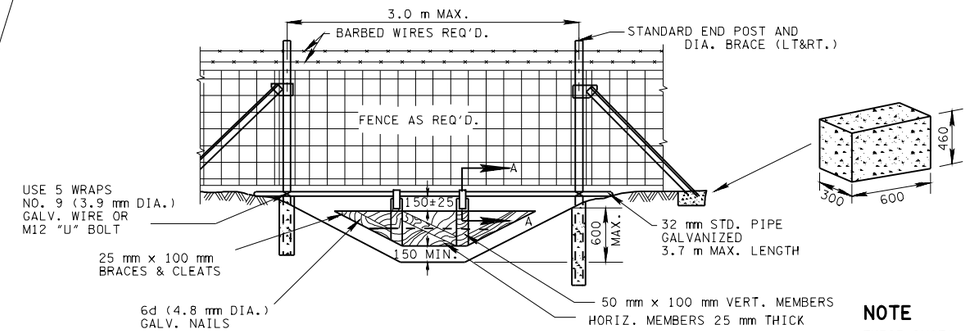

TYPICAL GATE FOR DITCH A

NOTE

THESE INSTALLATION SCHEMES ARE TYPICAL AND NOT TO BE CONSTRUED AS REPRESENTATIVE OF ALL CONDITIONS WHICH WILL BE ENCOUNTERED. CONSTRUCTION MAY BE VARIED AS REQUIRED TO MEET FIELD CONDITIONS AND/OR AS DIRECTED BY THE ENGINEER.

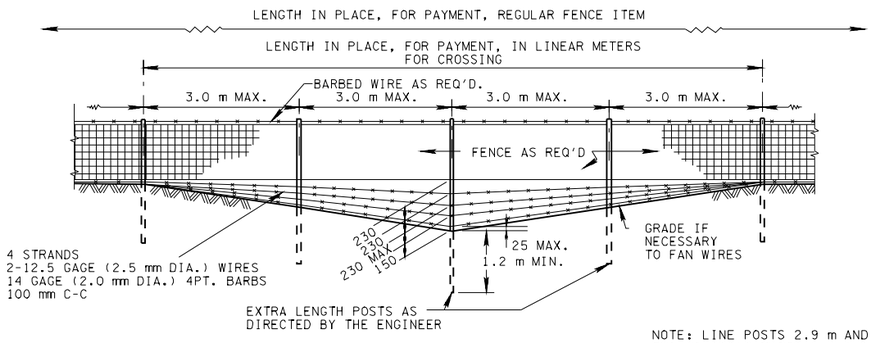

CROSSING TYPE 1

NOTE: LINE POSTS 2.9 m AND LONGER FOR CROSSING TYPES 1 & 2 SHALL BE SET IN CONCRETE FOOTINGS.

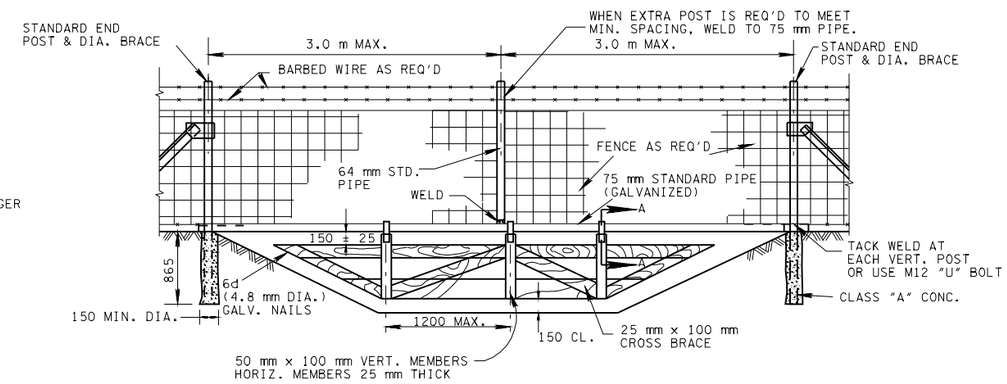

TYPICAL GATE FOR DITCH TYPE B

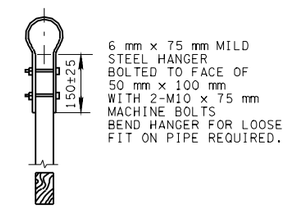

SECTION A-A

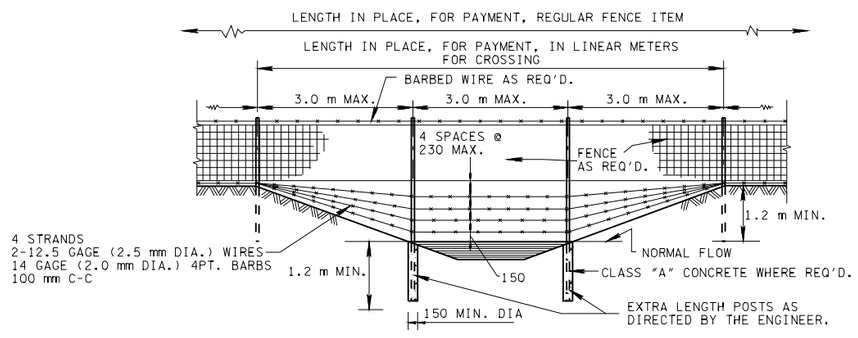

CROSSING TYPE 2

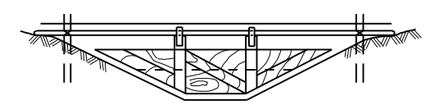

SKETCH SHOWING AREA

TO BE MEASURED FOR PAYMENT INDICATED BY HATCHING

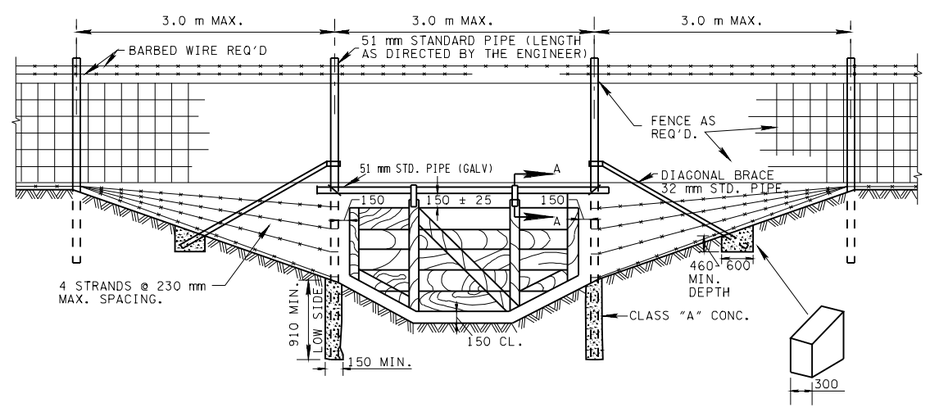

TYPICAL GATE FOR DITCH TYPE C

DETAILS NOT SHOWN ABOVE ARE SAME AS FOR TYPE "B" GATE

CONSTRUCTION:

GATE FOR DITCH SHALL BE ERECTED AT LOCATIONS INDICATED IN THE PLANS OR AS INDICATED BY THE ENGINEER.

COMPENSATION FOR WATER GATES AND WATER CROSSINGS IS INTENDED ONLY FOR ADDITIONAL MATERIAL* AND WORK REQUIRED FOR THE FACILITIES WHICH ARE NOT PROVIDED FOR IN THE REGULAR RIGHT-OF-WAY FENCE ITEM.

PAYMENT WILL BE MADE UNDER:
ITEM NO.707M04 WATER CROSSING PER LINEAR METER
ITEM NO.707M05 WATER GATE PER SQUARE METER

* INCLUDES ADDITIONAL PIPE, EXTRA LENGTHS OF POSTS, WIRE, LUMBER, HARDWARE AND CONCRETE.

TENNESSEE METRIC D.O.T.

ALL UNITS ARE IN MILLIMETERS UNLESS NOTED OTHERWISE.

MINOR REVISION -- FHWA APPROVAL NOT REQUIRED.

STATE OF TENNESSEE
DEPARTMENT OF TRANSPORTATION

EXAMPLES OF WATER GATES AND WATER CROSSINGS

11-1-95 | SM-FG-20