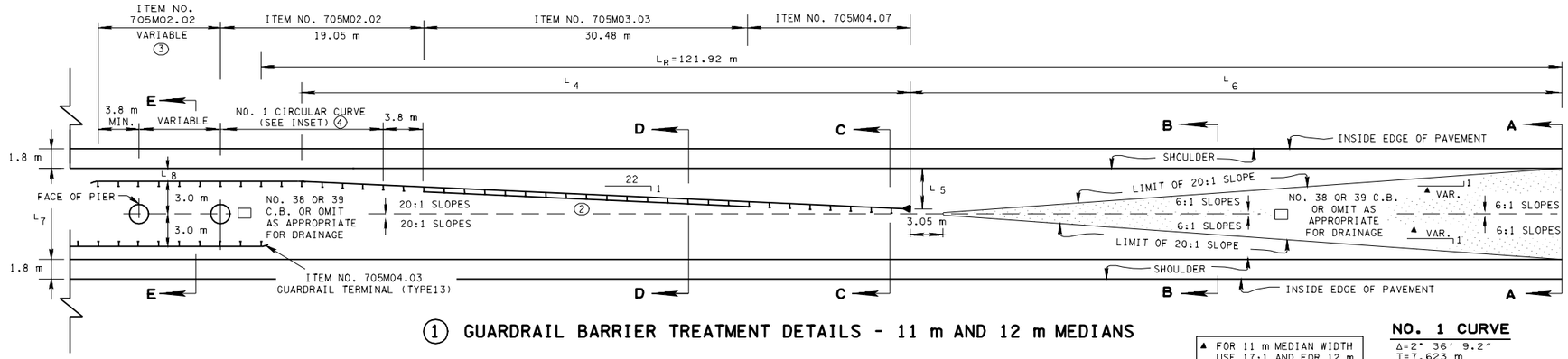


## ① GUARDRAIL BARRIER TREATMENT DETAILS - 11 m AND 12 m MEDIANS

▲ FOR 11 m MEDIAN WIDTH USE 17:1 AND FOR 12 m MEDIAN WIDTH USE 14:1.

**NO. 1 CURVE**

Δ=2° 36′ 9.2″
T=7.623 m
R=671.023 m
L=15.240 m

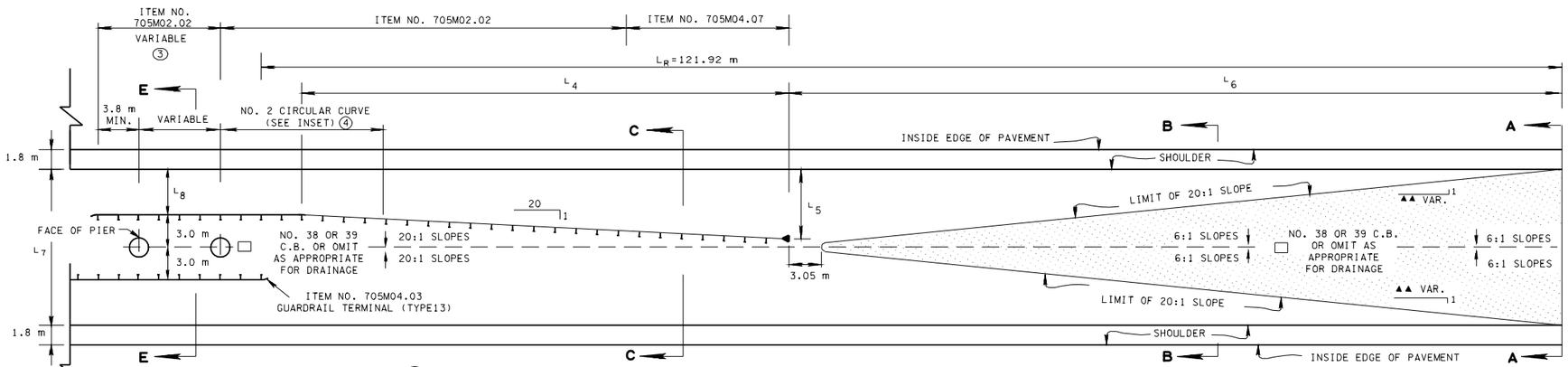


## ① GUARDRAIL BARRIER TREATMENT DETAILS - 15.0 m, 18.0 m AND 19.5 m MEDIANS

▲▲ FOR 15.0 m MEDIAN WIDTH USE 12:1 AND FOR 18.0 m AND 19.5 m MEDIAN WIDTH USE 9:1.

**NO. 2 CURVE**

Δ=2° 51′ 44.7″
T=7.623 m
R=305.053 m
L=15.240 m

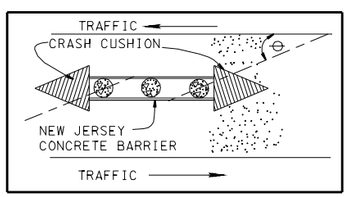


⊖ IS THE PROBABLE ANGLE OF IMPACT OF ENCROACHING VEHICLES. FOR MOST ROADSIDE CONDITIONS, AN ANGLE OF 10 DEGRESS OR LESS IS SUGGESTED. THE CRASH CUSHION SHALL BE INSTALLED PER APPROPRIATE STANDARD DRAWINGS OR MANUFACTURER'S SPECIFICATIONS.

## FOOTNOTES

① HALF TYPICAL - TREATMENT IS SAME FOR APPROACHING TRAFFIC IN OTHER DIRECTION BUT ON OPPOSITE SIDE FROM THAT AS SHOWN.

② USE 686 mm GUARDRAIL MOUNTING HEIGHT, OMIT THE RUB-RAIL OPTION.

③ VARIABLE TO NEAREST MULTIPLE OF 3.810 m REQUIRED TO CLEAR OUT-TO-OUT OF PIER, INCLUDING 1.905 m (MIN.) RAIL THAT SHALL EXTEND PAST THE TRAILING SIDE OF THE PIER.

④ P.I. OF CURVE IS LOCATED 15.24 m FROM CENTER OF FIRST PIER.

| G1 MEDIAN DIMENSIONS | | | | | | G2 GUARDRAIL QUANTITIES | | | |
|---|---|---|---|---|---|---|---|---|---|
| MEDIAN | $L_4$ | $L_5$ | $L_6$ | $L_7$ | $L_8$ | 705-02.02 | 705-03.03 | 705-04.03 | 705-04.07 |
| 11.0 | 57.092 | 3.206 | 61.018 | 7.315 | 0.610 | G3 45.72 | 60.96 | 2 | 2 |
| 12.0 | 57.092 | 3.816 | 61.018 | 8.534 | 1.219 | G3 45.72 | 60.96 | 2 | 2 |
| 15.0 | 49.470 | 4.916 | 68.641 | 10.973 | 2.438 | G3 91.44 | ——— | 2 | 2 |
| 18.0 | 45.662 | 6.553 | 72.448 | 14.630 | 4.267 | G3 83.82 | ——— | 2 | 2 |
| 19.5 | 45.662 | 7.163 | 72.448 | 15.850 | 4.877 | G3 83.82 | ——— | 2 | 2 |

G1 THE DIMENSIONS SHOWN IN THIS TABLE ARE TO BE USED IN ALL TANGENT OR NEARLY TANGENT SITUATIONS WITH DESIGN SPEEDS 100 Km/h OR BELOW. WHEN THE DESIGN SPEED EXCEEDS 100 K/h OR OTHER GEOMETRIC FEATURES SUCH AS CURVATURE, SKEWED BRIDGES, WHEN PIERS ARE NOT LOCATED AT THE CENTERLINE OF THE MEDIAN, OR ADDITIONAL HAZARDS ARE PRESENT, THE DESIGNER SHALL USE STANDARD DRAWING SM-GR-21.

G2 INCLUDES QUANTITIES FOR BOTH APPROACHES.

G3 DOES NOT INCLUDE GUARDRAIL QUANTITY BETWEEN PIERS ON EACH SIDE WHICH MUST BE ADDED BY THE DESIGNER.

## GENERAL NOTES

Ⓐ THE CONTRACTOR IS TO ELIMINATE THE 305 mm FLARE SHOWN ON GUARDRAIL STANDARD DRAWINGS FOR TYPE 38 GUARDRAIL TERMINAL ANCHORS (FLARED INSTALLATIONS ONLY).

Ⓑ THIS STANDARD, SHOWING BRIDGE PIERS IN THE MEDIAN, IS ALSO INTENDED TO SERVE AS BARRIER TREATMENT FOR OTHER UNAVOIDABLE MEDIAN HAZARDS.

PRIOR TO THE DESIGNATION OF ANY BARRIER TREATMENT, THE DESIGNER SHOULD CONSIDER THE FOLLOWING ASPECTS OF THE PROBLEM:

B1 COST EFFECTIVENESS STUDY MAY REVEAL THE CHOICE OF CRASH-CUSHION TYPE OF HAZARD PROTECTION, SEE SCHEMATIC LOCATED ABOVE FOOTNOTES.

B2 COST EFFECTIVENESS COMPARISON MAY WEIGHT THE DECISION IN FAVOR OF METAL BARRIERS IN WHICH CASE THIS STANDARD DRAWING WILL BE USED.

B3 (a) A WIDE MEDIAN IN WHICH THE MEDIAN BARRIER IS NOT WARRANTED (SEE DWG. RDM-S-17); OR

(b) LOW TRAFFIC VOLUME, LOW DESIGN SPEED, LOW CRASH RECORD, LIMITED FUNDS, OR ANY COMBINATION OF THESE, WHEN APPLIED IN ACCORDANCE WITH A FEASIBLE COST EFFECTIVENESS EVALUATION TECHNIQUE (SEE THE "ROADSIDE DESIGN GUIDE (1996), SECTION 3.2") MAY DICTATE THE OMISSION OF A BARRIER ENTIRELY.

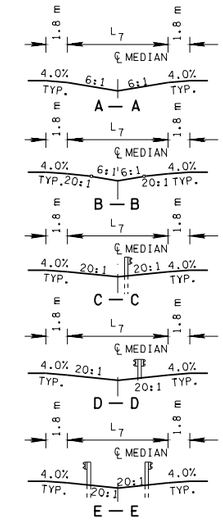


## SECTIONS - 11.0 m & 12.0 m MEDIANS

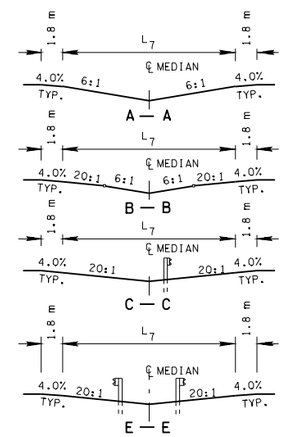


## SECTIONS - 15.0 m, 18.0 m, & 19.5 m MEDIANS

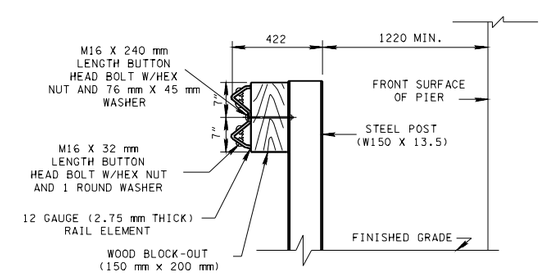


## TYPE II METAL BEAM RAIL SUPPORT DETAILS AT PIER

SEE STD. DWG. SM-GR-12 FOR POST REQUIREMENT BELOW FINISHED GRADE

- REV. 11-1-95: CHANGED TO METRIC.
- REV.7-29-96: MADE MINOR DIMENSIONING CHANGES.

  REV. 7-29-98: MODIFIED TYPE II RAIL SUPPORT DETAILS, MADE OTHER GENERAL REVISIONS.

  REV. 4-30-99: MODIFIED DRAWING IN GENERAL. ELIMINATED TYPE I RAIL SUPPORT DETAILS.

  REV. 5-27-99: MODIFIED VARIOUS NOTES ON DRAWING.
- REV. 5-27-01: CHANGED ITEM NO. 705M04.38 TO 705M04.07.

TENNESSEE METRIC D.O.T.

ALL UNITS ARE IN MILLIMETERS UNLESS NOTED OTHERWISE.

☐ MINOR REVISION -- FHWA APPROVAL NOT REQUIRED.

STATE OF TENNESSEE
DEPARTMENT OF TRANSPORTATION

GUARDRAIL BARRIER TREATMENT FOR PIERS IN MEDIAN

11-1-95 | SM-GR-16