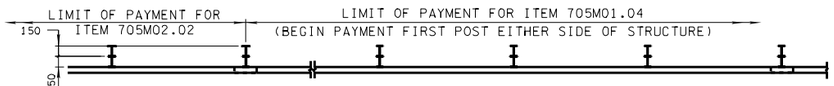

PLAN

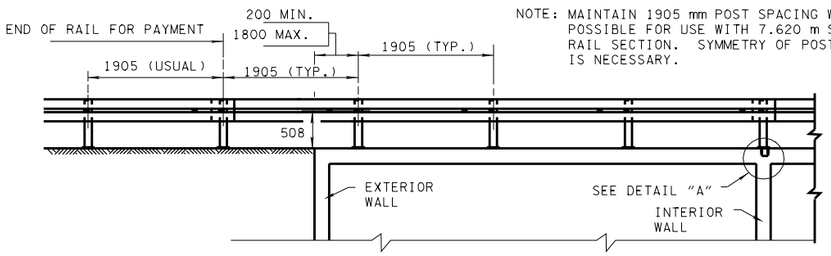

NOTE: MAINTAIN 1905 mm POST SPACING WHEREVER POSSIBLE FOR USE WITH 7.620 m STANDARD RAIL SECTION. SYMMETRY OF POST SPACING IS NECESSARY.

INSIDE ELEVATION OF GUARDRAIL

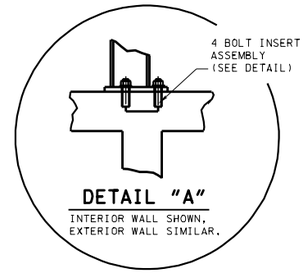

DETAIL "A"

INTERIOR WALL SHOWN, EXTERIOR WALL SIMILAR.

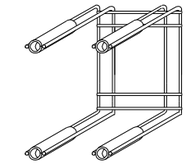

INSERT ASSEMBLY

FOR M19 X 102 mm HEX HEAD BOLTS (ASTM A307 SPECIFICATION)

INSERT ASSEMBLY IS FOR CONNECTION OF POSTS OVER WALLS ONLY AND NOT A SUBSTITUTE FOR PLATE ASSEMBLY ELSEWHERE.

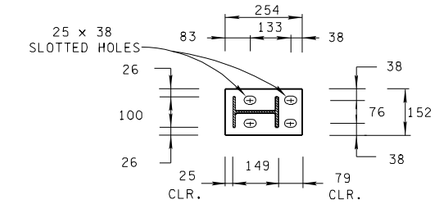

SECTION "A-A"

- REV. 11-1-95: CHANGED TO METRIC.
- REV. 7-29-96: MADE MINOR DIMENSIONING CHANGES.
- REV.9-5-97: MODIFIED INSIDE ELEVATION OF GUARDRAIL DETAIL.

  REV. 7-29-98: CHANGED STEEL BLOCK-OUTS TO WOOD BLOCK-OUTS IN ALL DETAILS AND NOTES.
- REV. 5-27-99: RELOCATED 32 mm DIAMETER FORMED HOLES OUTWARDLY 38 mm.
- REV. 10-26-00: ELIMINATED DETAILS FOR PRECAST, PRESTRESSED CONCRETE DECK PANELS FOR HEIGHT OF FILLS OVER 455 mm. CHANGED DESIGN NOTE 2.
- REV. 5-27-01: CHANGED ITEM NO. 705M06.01 TO 705M01.04.
- REV. 4-15-02: CHANGED SHEET NAME. ELIMINATED DETAILS FOR PRECAST, PRESTRESSED CONCRETE DECK PANCELS FOR HEIGHTS LESS THAN 455 mm. CHANGED TYPE OF CUEB TO COMPLY WITH NEW STANDARD DRAWINGS STD-15-6 AND STD-15-7.

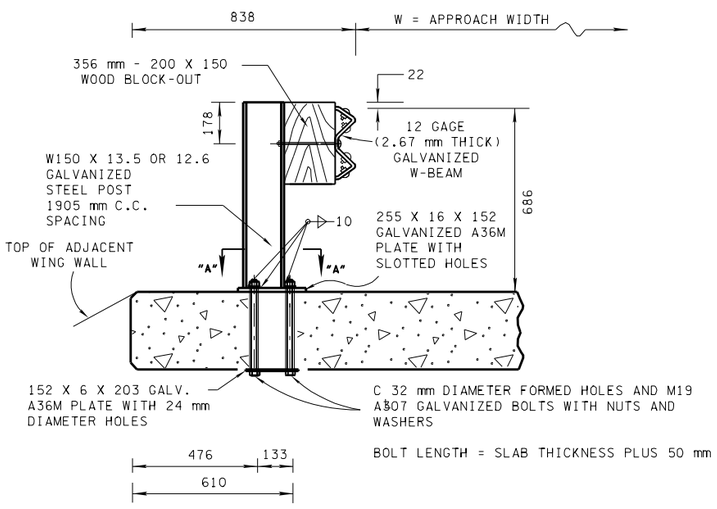

BOLT LENGTH = SLAB THICKNESS PLUS 50 mm

DETAIL FOR CONCRETE DECK USED AS A RIDING SURFACE SHOWING OUTLET END

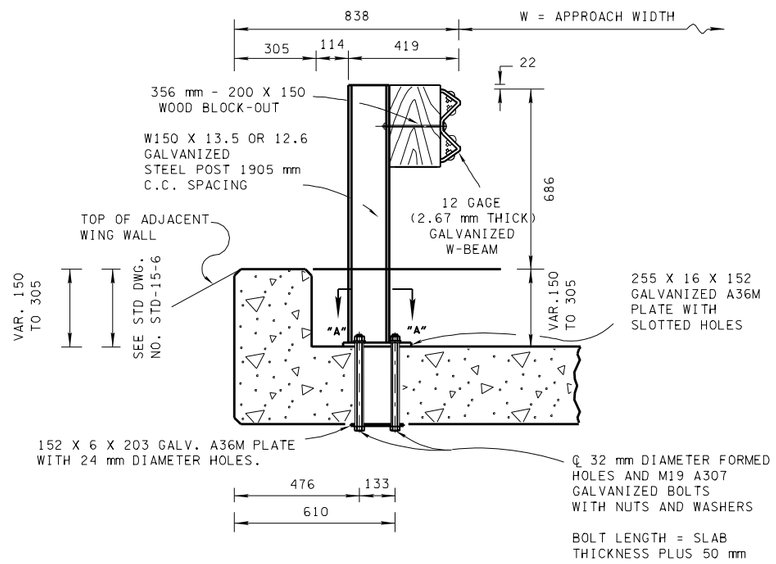

C 32 mm DIAMETER FORMED HOLES AND M19 A307 GALVANIZED BOLTS WITH NUTS AND WASHERS

BOLT LENGTH = SLAB THICKNESS PLUS 50 mm

DETAIL FOR CONCRETE DECK WITH 150 mm TO 305 mm OF COVER SHOWING OUTLET END

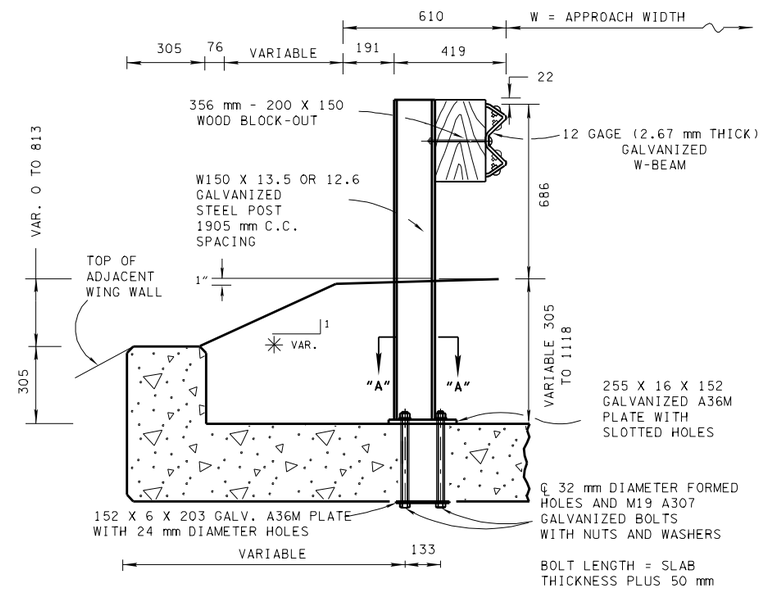

C 32 mm DIAMETER FORMED HOLES AND M19 A307 GALVANIZED BOLTS WITH NUTS AND WASHERS

BOLT LENGTH = SLAB THICKNESS PLUS 50 mm

✳ DENOTES ADJOINING ROADWAY SIDE SLOPE

DETAIL FOR CONCRETE DECK WITH 305 mm TO 1065 mm OF COVER SHOWING OUTLET END

GENERAL NOTES

(A) THE EXACT POSITION OF GUARDRAIL SHALL BE AS SHOWN ELSEWHERE ON THE PLANS OR AS DIRECTED BY THE ENGINEER. GUARDRAIL SHALL BE TRANSITIONED TO A SMOOTH CONNECTION WITH OTHER GUARDRAIL OR STRUCTURE RAILING AS SHOWN ELSEWHERE ON PLANS.

(B) AT THE OPTION OF THE CONTRACTOR THE RAIL ELEMENTS FOR THE GUARDRAIL MAY BE FURNISHED IN EITHER 3.810 m OR 7.620 m NOMINAL LENGTHS WITH POST BOLT SLOTS FOR CONNECTION TO POSTS.

(C) BOLTS SHALL BE OF SUFFICIENT LENGTH TO EXTEND THROUGH THE FULL THICKNESS OF THE NUT AND NO MORE THAN 19 mm BEYOND IT.

(D) GUARDRAIL THAT IS INSTALLED ON CURVE WITH A RADIUS OF 45 m OR LESS SHALL BE SHOP CURVED.

(E) STEEL POST SHALL BE BLOCKED OUT. A 200 X 150 WOOD BLOCK-OUT SHALL BE USED WITH EACH STEEL POST. SEE STANDARD DRAWING SM-GR-13 FOR SPECIFICATIONS AND DETAILS.

(F) WELDED STEEL POSTS SHALL MEET THE REQUIREMENTS OF ASTM A769M. THE FLANGE WIDTH AND THICKNESS, WEB THICKNESS, AND DEPTH OF WELDED POSTS SHALL EQUAL OR EXCEED THE DIMENSIONS OF A STANDARD ROLLED W150 X 12.6 OR W150 X 13.5 STEEL POST.

(G) STEEL POSTS SHALL MEET THE REQUIREMENTS OF ASTM A36M. BOLT HOLES SHALL BE APPROXIMATELY CENTERED BETWEEN WEB AND EDGE OF FLANGE OF SPACERS AND POSTS.

(H) FOR DIMENSIONS AND DETAILS NOT SHOWN SEE STANDARD DRAWING NOS. STD-15-6, STD-15-7, AND THE SM-GR-SERIES.

DESIGN NOTES

(1) WHEN DEPTH OF FILL AT FACE OF GUARDRAIL EXCEEDS 1065 mm DELETE THE USE OF BOLTED BASE PLATES AND DRIVE POSTS.

(2) THE USE OF PRECAST, PRESTRESSED CONCRETE DECK PANELS IN BOX AND SLAB TYPE CULVERTS IS PROHIBIED.

(3) THIS RAIL SYSTEM HAS BEEN TESTED IN ACCORDANCE WITH THE CRITERIA SET FORTH IN NCHRP REPORT NUMBER 230, MARCH 1981, AND SUCCESSFULLY CONTAINED A 2018 kg VEHICLE AT A VELOCITY OF 99.5 km/h AND AN IMPACT ANGLE OF 25.3 DEGREES. REFERENCE REPORT FHWA/TX-86/64-405-2F, NOVEMBER 1986.

(4) ANY REINFORCING STEEL THAT INTERFERES WITH THE 32 mm DIAMETER FORMED HOLES SHALL BE MOVED HORIZONTALLY TO PROVIDE A 25 mm MINIMUM CLEARANCE TO THE HOLE.

TENNESSEE METRIC D.O.T.

ALL UNITS ARE IN MILLIMETERS UNLESS NOTED OTHERWISE.

☐ MINOR REVISION -- FHWA APPROVAL NOT REQUIRED.

STATE OF TENNESSEE
DEPARTMENT OF TRANSPORTATION

GUARDRAIL ATTACHMENT TO CONCRETE DECKS OF BOX AND SLAB CULVERTS AND BRIDGES

11-1-95 | SM-GR-22