- REV. 9-11-01: CHANGED SPECIAL INSTALLATION NOTE.
- REV. 2-1-99: CHANGED DRAWING NAME AND MADE GENERAL REVISIONS.
- REV. 10-26-00: CHANGED GUARDRAIL EXTRUDER HEAD AND DECAL DETAILS.
- REV. 5-27-01: CHANGED PAY ITEM NO. 705M04.38 TO 705M04.07. ADDED SPECIAL INSTALLATION NOTE.

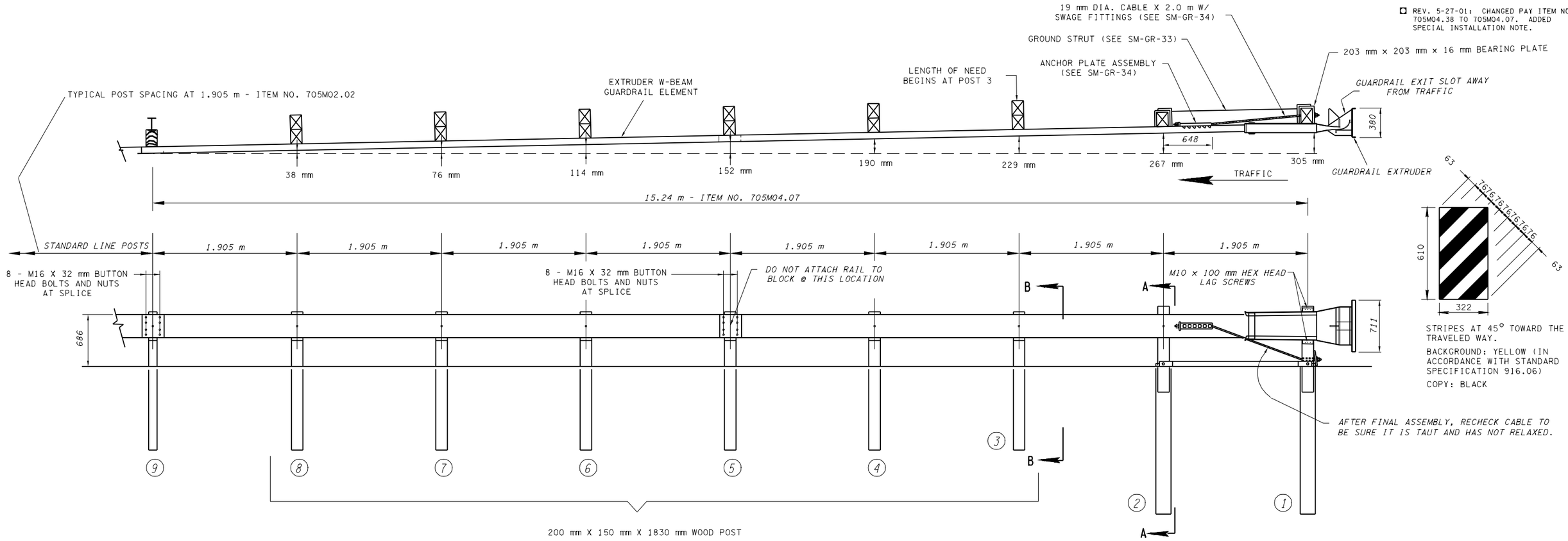

STRIPES AT 45° TOWARD THE TRAVELED WAY.

BACKGROUND: YELLOW (IN ACCORDANCE WITH STANDARD SPECIFICATION 916.06)

COPY: BLACK

50:1 TAPER OVER 15.24 m LENGTH OF SYSTEM		
CODE NO.	DECIMAL (m) X	DECIMAL (m) Y
9	0.000	0.000
8	0.038	1.905
7	0.076	3.810
6	0.114	5.715
5	0.152	7.620
4	0.190	9.525
3	0.229	11.430
2	0.267	13.335
1	0.305	15.240

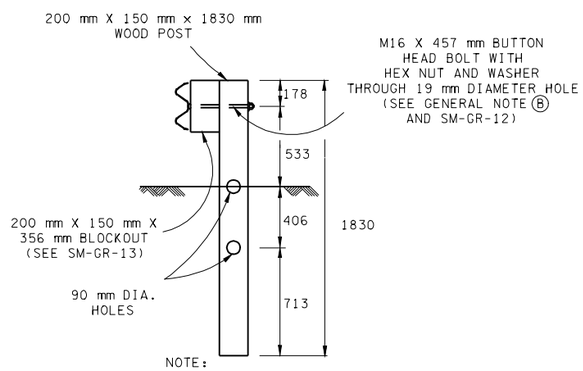

NOTE:
SECTION "B-B" IS SIMILAR AT POST NO.5 EXCEPT RAIL IS NOT ATTACHED AT POST NO.5

SECTION "B-B"

(TYPICAL AT POST NO. 3, 4, 6, 7, & 8)

SPECIAL INSTALLATION NOTE

FOR THE TYPE 38 GUARDRAIL TERMINAL TO FUNCTION AS IT WAS CRASH TESTED UNDER NCHRP-350 TEST LEVEL 3 THE EARTH PAD UNDER IT MUST BE CONSTRUCTED PER STANDARD DRAWING NO. SM-GR-38.

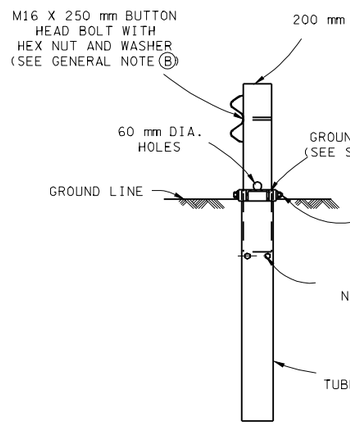

SECTION "A-A"

(TYPICAL AT POST NO. 2)

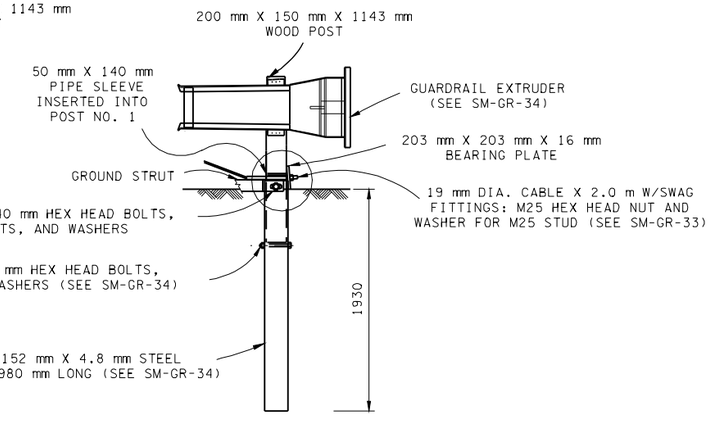

ENLARGED VIEW AT POST NO. 1

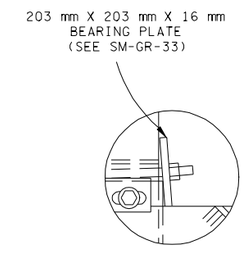

GENERAL NOTES

- (A) THE POST OFFSET DIMENSIONS ARE GIVEN TO THE CENTER OF THE TRAFFIC FACE OF THE GUARDRAIL.
- (B) THE M16 FLAT WASHER IS USED UNDER THE NUT, BEHIND THE POST ONLY. NO WASHER IS USED AT THE RAIL.
- (C) ET-2000 (2-TUBE) TERMINAL IS TO BE INSTALLED UNDER THE PRICE BID FOR ITEM NO. 705M04.07 TANGENT ENERGY ABSORBING TERMINAL (NCHRP 350-TL3) PER EACH.
- (D) A FOUR (4) TUBE OR EIGHT (8) TUBE OPTION MAY BE USED, SHOP DRAWINGS WILL BE REQUIRED.

TENNESSEE METRIC D.O.T.

ALL UNITS ARE IN MILLIMETERS UNLESS NOTED OTHERWISE.

MINOR REVISION -- FHWA APPROVAL NOT REQUIRED.

STATE OF TENNESSEE
DEPARTMENT OF TRANSPORTATION

ET-2000 GUARDRAIL TERMINAL ANCHOR (TYPE 38) POST LAYOUT AND ERECTION DETAILS

7-29-98 | SM-GR-32