REV. 2-1-99: CHANGED DRAWING NAME AND MADE GENERAL REVISIONS.

REV. 10-26-00: CHANGED GUARDRAIL EXTRUDER DETAIL FROM ORIGINAL HEAD TO ET-PLUS HEAD.

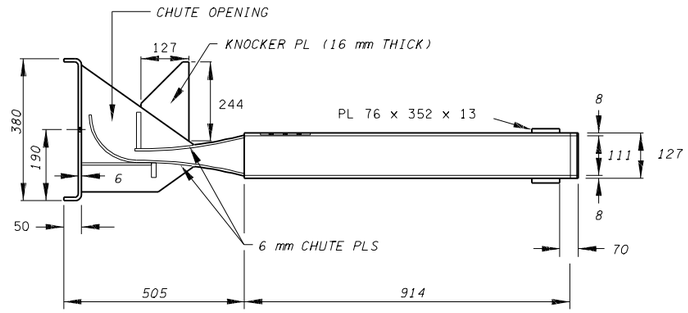

TOP VIEW

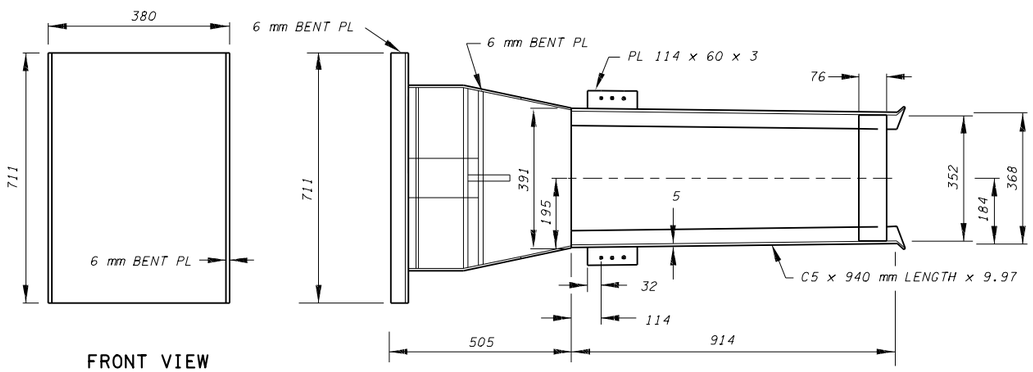

FRONT VIEW

SIDE VIEW

GUARDRAIL EXTRUDER DETAILS FOR ET-PLUS

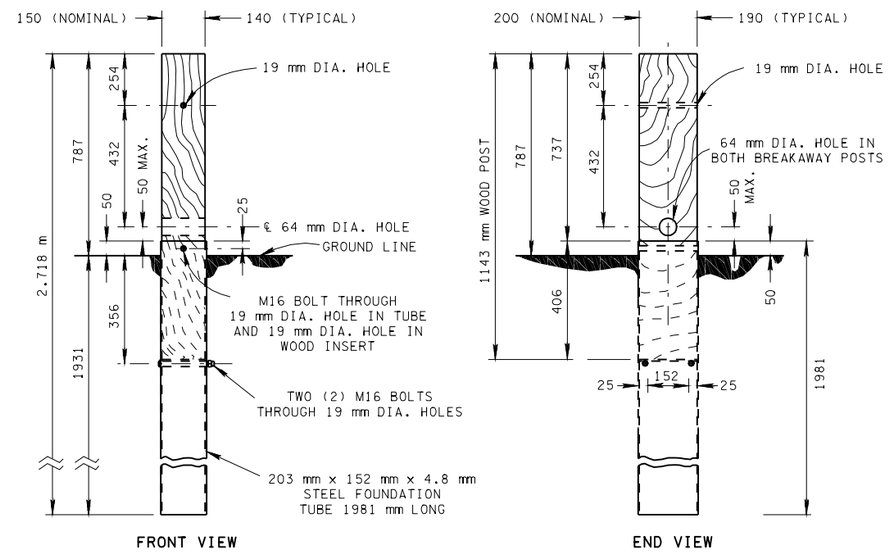

FRONT VIEW

END VIEW

NO. 1 & 2 BREAKAWAY POSTS WITH 1981 mm TUBE SLEEVE

GENERAL NOTES

(A) THE NO. 1 AND NO. 2 BREAKAWAY POSTS WILL HAVE A 150 mm x 200 mm (NOMINAL) CROSS-SECTION AREA AND WILL HAVE A 64 mm DIAMETER HOLE CENTERED 686 mm BELOW THE TOP OF THE POST ON THE 200 mm SIDE AS SHOWN. ALL POSTS SHALL BE ERECTED SO THAT THE GUARDRAIL WILL HAVE A TOP-OF-RAIL HEIGHT OF 686 mm.

(B) ALL HOLES IN WOOD POSTS ARE TO BE DRILLED BEFORE PRESERVATIVE TREATMENT.

(C) ALL CUTTING, DRILLING, AND WELDING OF STEEL COMPONENTS SHALL BE DONE BEFORE GALVANIZING.

(D) THE FINISHED CABLE ASSEMBLY WILL NOT BE ACCEPTABLE UNLESS IT IS IN TENSION WITH NO SAG.

(E) SEE STANDARD DRAWING NOS. SM-GR-32 AND SM-GR-33 FOR ADDITIONAL DETAILS AND GENERAL NOTES.

(F) THE STEEL TUBES ARE TO BE DRIVEN INTO THE GROUND BEFORE THE WOODEN POSTS ARE INSERTED.

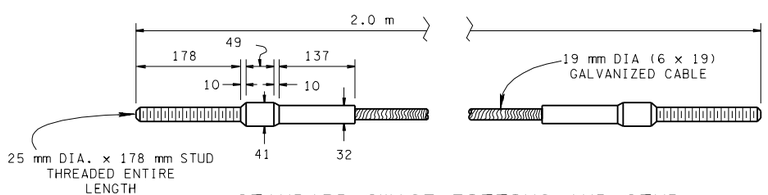

STANDARD SWAGE FITTING AND STUD

NOTE: CABLE TO BE SWAGE-CONNECTED

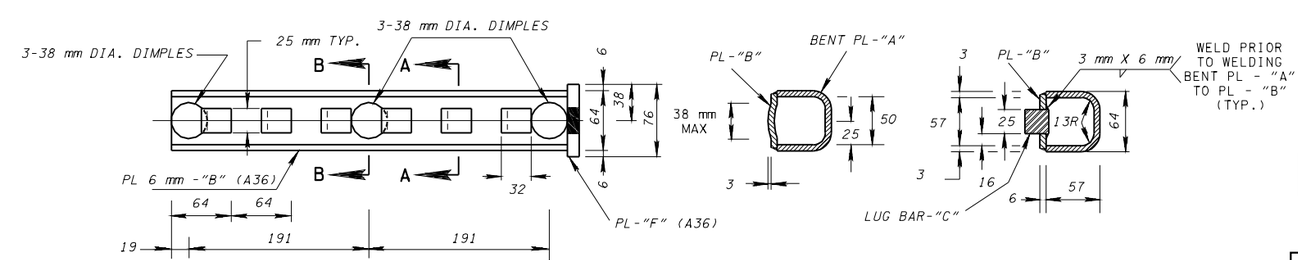

ANCHOR PLATE ASSEMBLY

SECTION B-B

SECTION A-A

ALL UNITS ARE IN MILLIMETERS UNLESS NOTED OTHERWISE.

MINOR REVISION -- FHWA APPROVAL NOT REQUIRED.

STATE OF TENNESSEE
DEPARTMENT OF TRANSPORTATION

ET-2000
(2 TUBE)
POST AND
ASSEMBLY DETAILS

7-29-98

SM-GR-34