REV. 10-10-01: CHANGED SPECIAL INSTALLATION NOTE AND MODIFIED GUARDRAIL TERMINAL IMPACT HEAD.

REV. 2-1-99: MADE GENERAL REVISION.

REV. 5-27-01: CHANGED PAY ITEM NO. 705M04.38 TO 705M04.07. ADDED SPECIAL INSTALLATION NOTE.

REV. 9-11-01: CHANGED SPECIAL INSTALLATION NOTE.

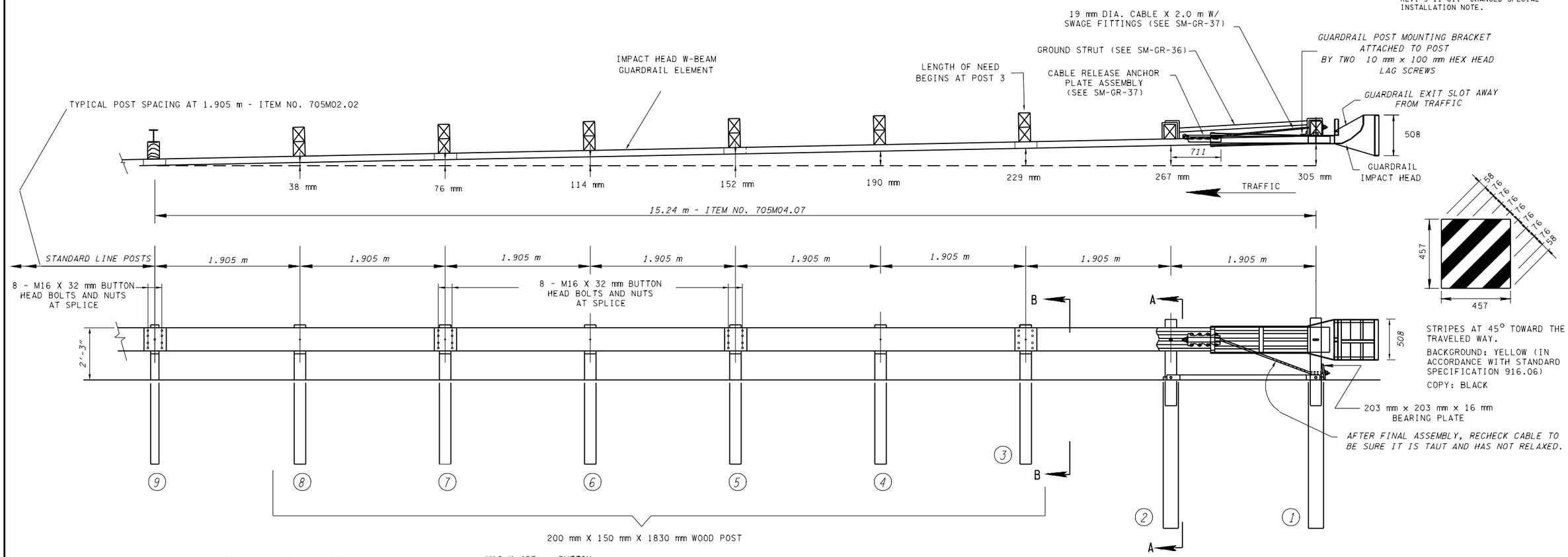

50:1 TAPER OVER 15.24 m LENGTH OF SYSTEM		
CODE NO.	DECIMAL (m) X	DECIMAL (m) Y
9	0.000	0.000
8	0.038	1.905
7	0.076	3.810
6	0.114	5.715
5	0.152	7.620
4	0.190	9.525
3	0.229	11.430
2	0.267	13.335
1	0.305	15.240

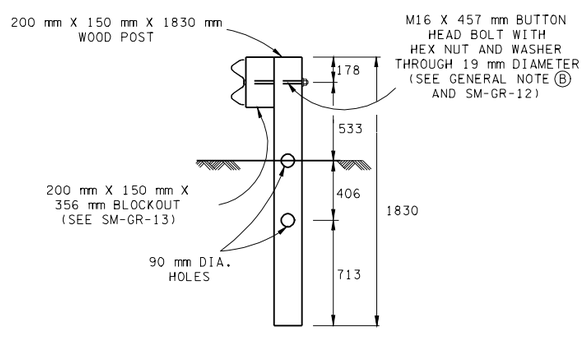

SECTION "B-B"

(TYPICAL AT POST NO. 3, 4, 5, 6, 7, & 8)

SPECIAL INSTALLATION NOTE

FOR THE TYPE 38 GUARDRAIL TERMINAL TO FUNCTION AS IT WAS CRASH TESTED UNDER NCHRP-350 TEST LEVEL 3 THE EARTH PAD UNDER IT MUST BE CONSTRUCTED PER STANDARD DRAWING NO. SM-GR-38.

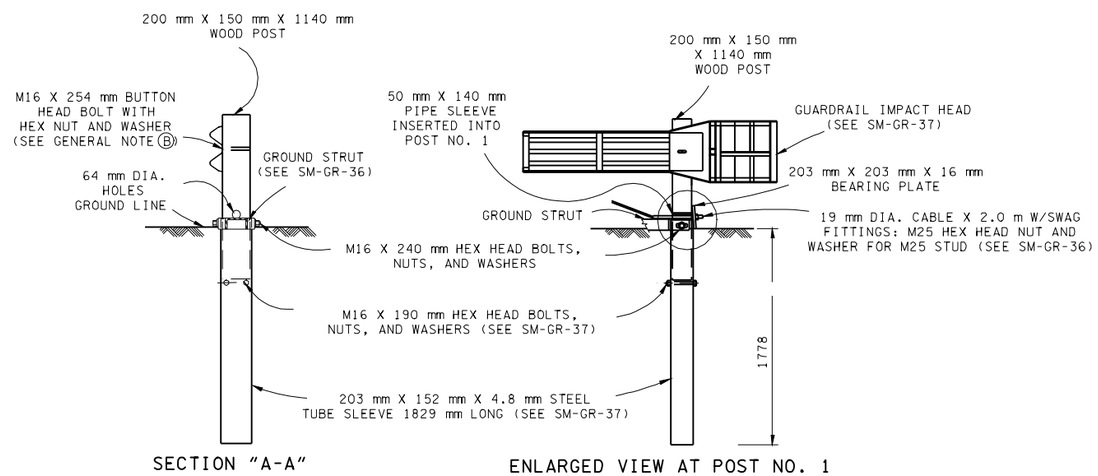

SECTION "A-A"

(TYPICAL AT POST NO. 2)

ENLARGED VIEW AT POST NO. 1

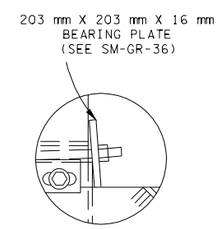

GENERAL NOTES

(A) THE POST OFFSET DIMENSIONS ARE GIVEN TO THE CENTER OF THE TRAFFIC FACE OF THE GUARDRAIL.

(B) THE M16 FLAT WASHER IS USED UNDER THE NUT, BEHIND THE POST ONLY. NO WASHER IS USED AT THE RAIL.

(C) SKT-350 (2-TUBE) TERMINAL IS TO BE INSTALLED UNDER THE PRICE BID FOR ITEM NO. 705M04.07 TANGENT ENERGY ABSORBING TERMINAL (NCHRP 350-TL3) PER EACH.

(D) A FOUR (4) TUBE OR EIGHT (8) TUBE OPTION MAY BE USED, SHOP DRAWINGS WILL BE REQUIRED.

TENNESSEE METRIC D.O.T.

ALL UNITS ARE IN MILLIMETERS UNLESS NOTED OTHERWISE.

MINOR REVISION -- FHWA APPROVAL NOT REQUIRED.

STATE OF TENNESSEE
DEPARTMENT OF TRANSPORTATION

SKT-350 GUARDRAIL TERMINAL ANCHOR (TYPE 38) POST LAYOUT AND ERECTION DETAILS

7-29-98 | SM-GR-35