REV. 2-1-99: MADE GENERAL REVISION.

IMPACT HEAD W-BEAM GUARDRAIL ELEMENT DETAILS

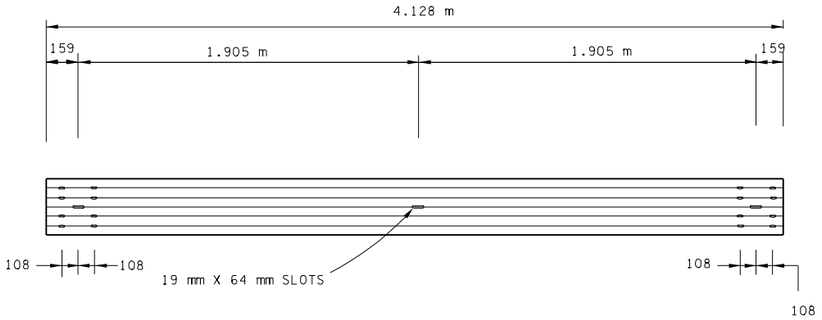

SECOND, THIRD AND FOURTH SECTIONS OF GUARDRAIL

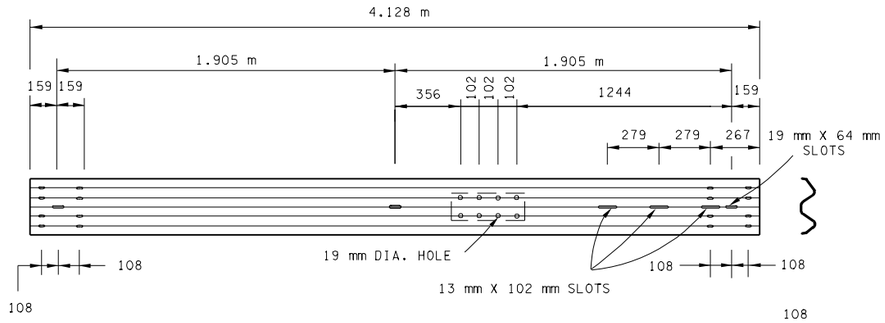

FIRST SECTION OF GUARDRAIL

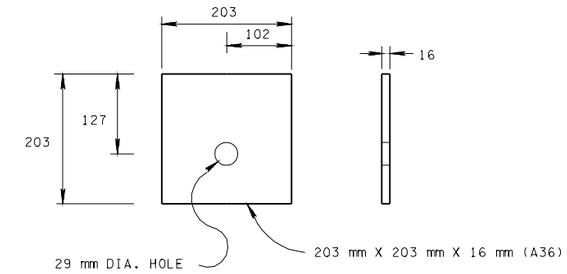

BEARING PLATE DETAIL

FOR BEARING PLATE PLACEMENT THE 127 mm SIDE SHOULD BE INSTALLED UP.

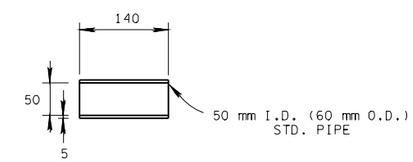

PIPE SLEEVE

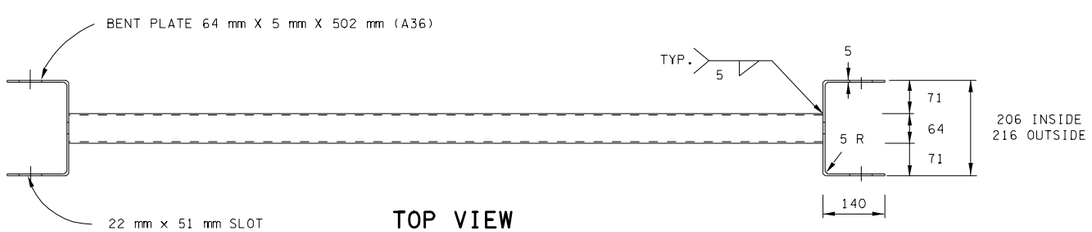

TOP VIEW

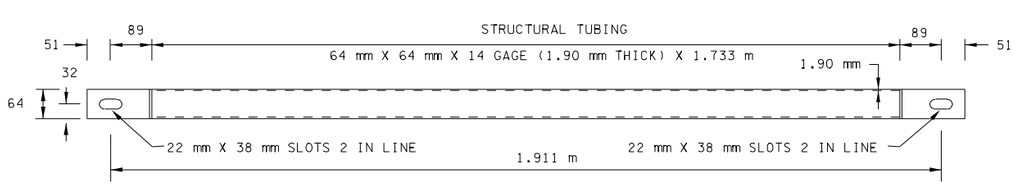

FRONT VIEW

GROUND STRUT

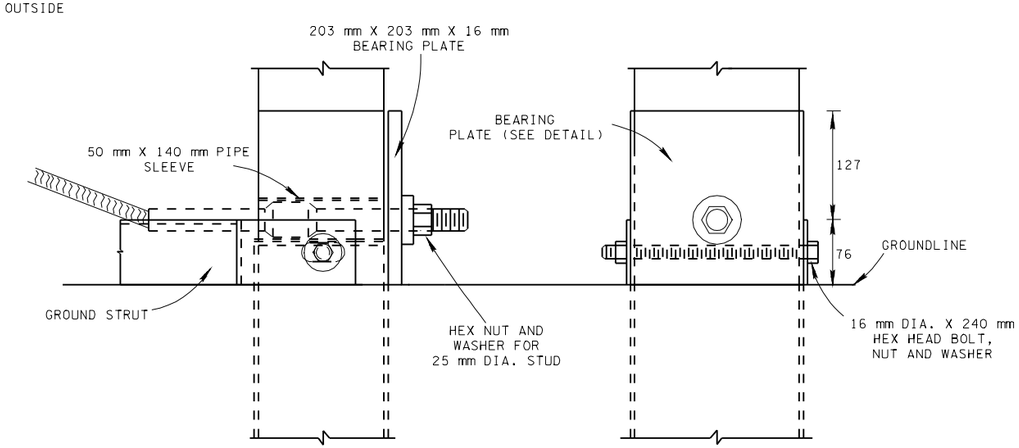

FRONT VIEW **END VIEW**

BEARING PLATE ASSEMBLY DETAIL

ALL UNITS ARE IN MILLIMETERS UNLESS NOTED OTHERWISE.

MINOR REVISION -- FHWA APPROVAL NOT REQUIRED.

STATE OF TENNESSEE
DEPARTMENT OF TRANSPORTATION

SKT-350
(2 TUBE)
GUARDRAIL ELEMENT
ASSEMBLY DETAILS

7-29-98 SM-GR-36