- REV. 2-1-99: MADE GENERAL REVISION.
- REV. 10-10-01: MODIFIED GUARDRAIL IMPACT HEAD DETAILS AND ADDED DETAIL FOR GUARDRAIL POST MOUNTING BRACKET.
- REV. 5-5-05: MODIFIED TOP VIEW.

GENERAL NOTES

(A) THE NO. 1 AND NO. 2 BREAKAWAY POSTS WILL HAVE A 150 mm x 200 mm (NOMINAL) CROSS-SECTION AREA AND WILL HAVE A 64 mm DIAMETER HOLE CENTERED 686 mm BELOW THE TOP OF THE POST ON THE 200 mm SIDE AS SHOWN. ALL POSTS SHALL BE ERECTED SO THAT THE GUARDRAIL WILL HAVE A TOP-OF-RAIL HEIGHT OF 686 mm.

(B) ALL HOLES IN WOOD POSTS ARE TO BE DRILLED BEFORE PRESERVATIVE TREATMENT.

(C) ALL CUTTING, DRILLING, AND WELDING OF STEEL COMPONENTS SHALL BE DONE BEFORE GALVANIZING.

(D) THE FINISHED CABLE ASSEMBLY WILL NOT BE ACCEPTABLE UNLESS IT IS IN TENSION WITH NO SAG.

(E) SEE STANDARD DRAWING NOS. SM-GR-35 AND SM-GR-36 FOR ADDITIONAL DETAILS AND GENERAL NOTES.

(F) THE STEEL TUBES ARE TO BE DRIVEN INTO GROUND BEFORE THE WOODEN POSTS ARE INSERTED.

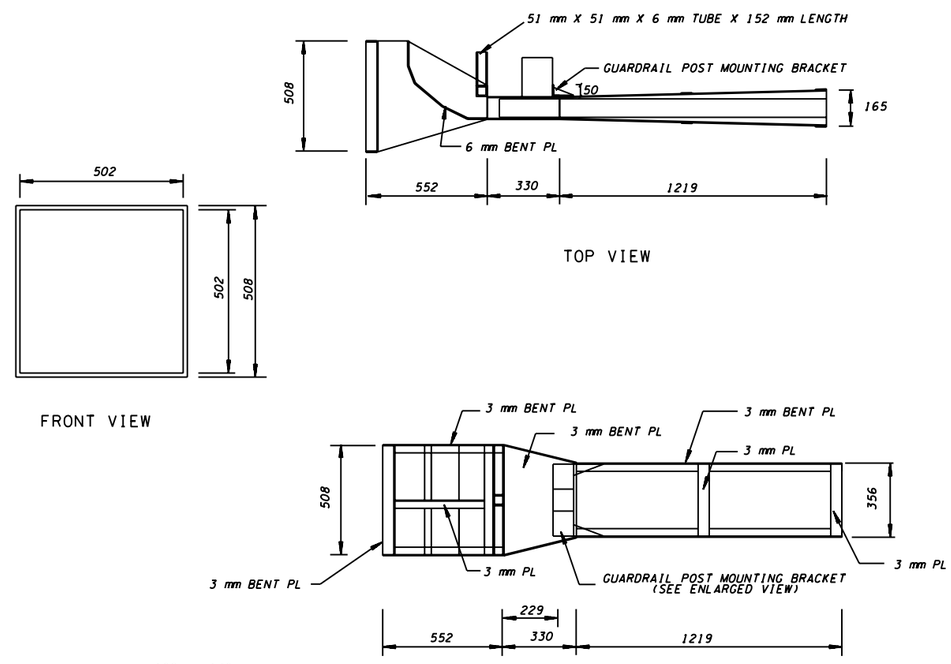

GUARDRAIL IMPACT HEAD DETAILS

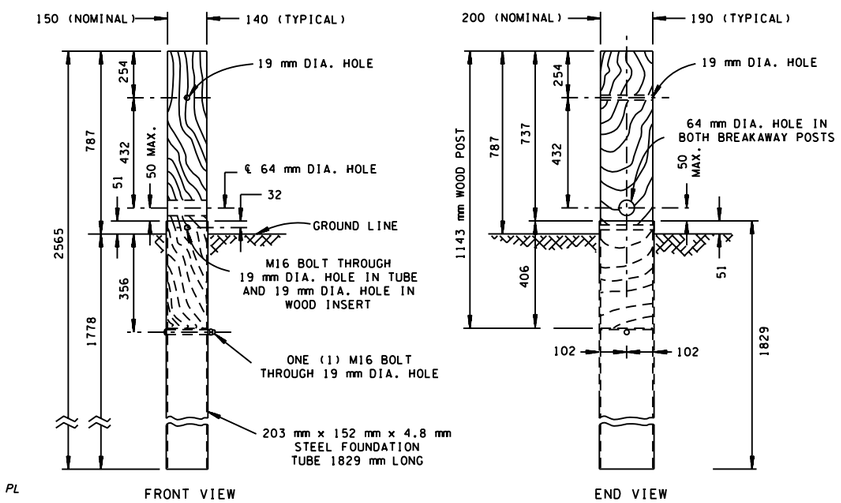

NO. 1 & 2 BREAKAWAY POSTS WITH 1829 mm TUBE SLEEVE

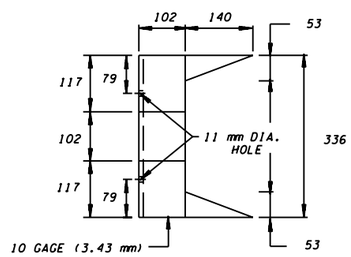

GUARDRAIL POST MOUNTING BRACKET

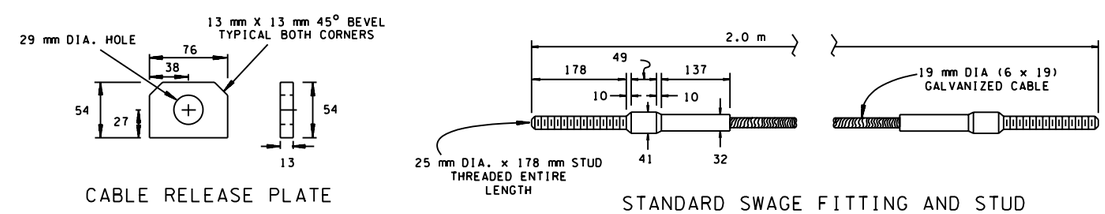

CABLE RELEASE PLATE

STANDARD SWAGE FITTING AND STUD

NOTE: CABLE TO BE SWAGE-CONNECTED

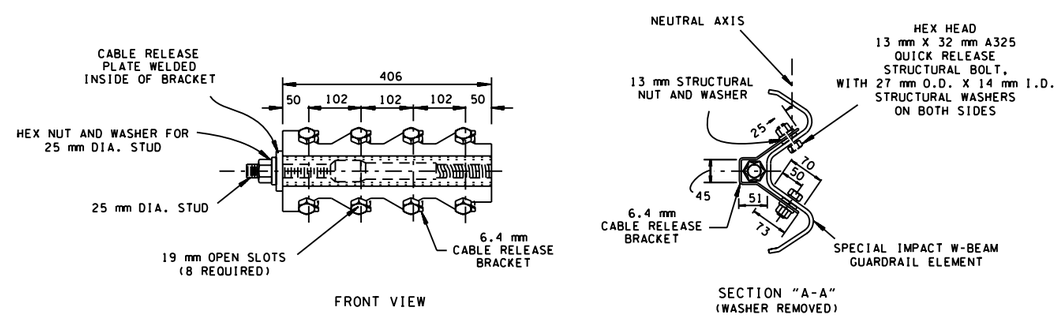

CABLE RELEASE ANCHOR PLATE ASSEMBLY DETAILS

SEE DRAWING NO. SM-GR-35 FOR RELATION OF SECTION "A-A" TO FRONT ELEVATION VIEW OF GUARDRAIL ANCHORS

ALL UNITS ARE IN MILLIMETERS UNLESS NOTED OTHERWISE.

☐ MINOR REVISION -- FHWA APPROVAL NOT REQUIRED.

STATE OF TENNESSEE
DEPARTMENT OF TRANSPORTATION

SKT-350
(2 TUBE)
POST AND
ASSEMBLY DETAILS

7-29-98 | SM-GR-37

6/20/2005
DGNSPEC

smgr37.dgn 6/20/2005 7:56:34 AM