REV. 11-1-95: CHANGED TO METRIC.

REV. 12-16-03: DELETED GROUNDING CONDUCTOR CHART. ADDED NOTE (E).

REV. 7-29-04: CHANGED DRAWING NO. FROM T-L-1A TO T-L-1. ADDED GENERAL NOTE (E). DELTED GROUNDING CONDOCTOR SIZE TABLE.

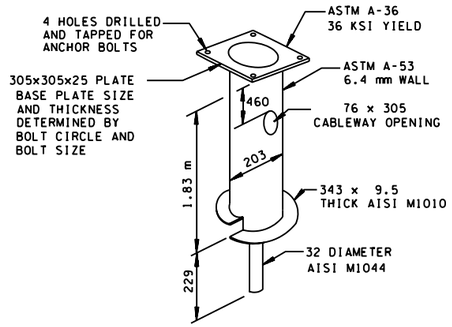

METAL FOUNDATION DETAIL
ALTERNATE

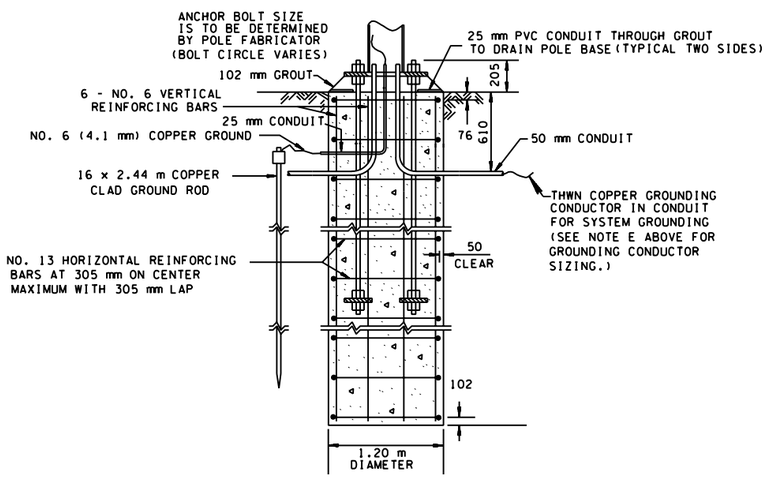

HIGH MAST FOUNDATION DETAIL

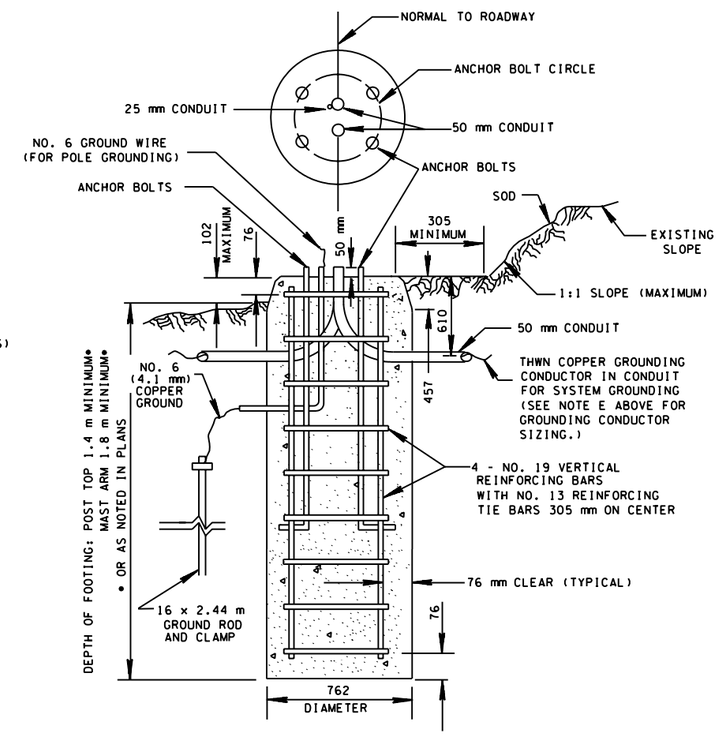

LIGHT STANDARD FOUNDATION DETAIL

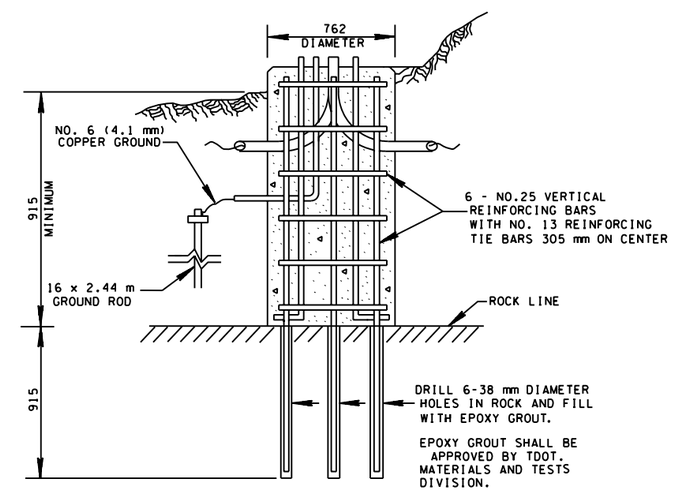

LIGHT STANDARD FOUNDATION DETAIL
(IN ROCK)

MINIMUM HIGH MAST FOOTING DEPTH	
TOWER HEIGHT	MINIMUM FOOTING DEPTH
30.5 m	4.3 m
30.8 m -36.6 m	5.5 m
36.9 m -42.7 m	6.7 m
43.0 m -45.8 m	7.9 m

THE ABOVE FOOTING DEPTHS ARE FOR BIDING PURPOSES ONLY. THE FINAL FOOTING DEPTH WILL BE DETERMINED BY AN ANALYSIS OF THE SOIL INFORMATION OBTAINED BY THE CONTRACTOR AND SUPPLIED TO THE ENGINEER OF STRUCTURES. SEE SPECIAL NOTES FOR HIGH MAST POLES.

GENERAL NOTES

(A) ANCHOR BOLT CIRCLE DIAMETER SHALL COMPLY WITH POLE MANUFACTURER'S ANCHOR BOLT PATTERN FOR THE SPECIFIC POLE AND BREAKAWAY BASE.

(B) THE TOP 305 mm OF THE FOUNDATION MAY BE FORMED SQUARE.

(C) WHEN NECESSARY DUE TO ROCK, THE GROUND ROD SHALL BE PLACED HORIZONTALLY IN THE CONDUIT TRENCH, MAINTAINING A 75 mm MINIMUM SEPARATION FROM CONDUIT.

(D) FOUNDATION SHALL BE PLACED AGAINST UNDISTURBED SOIL. IF ROCK OR WATER IS ENCOUNTERED DURING EXCAVATION FOR FOUNDATION, THE CONTRACTOR MAY PROPOSE MODIFICATIONS TO THE FOUNDATION DESIGN, SUBJECT TO THE REVIEW AND APPROVAL OF THE ENGINEER.

(E) THE GROUNDING CONDUCTOR WIRE INSIDE THE CONDUIT FOR SYSTEM GROUNDING SHALL BE THE SAME SIZE AS THE LARGEST DIAMETER WIRE USED FOR THE POWER CONDUCTOR.

TENNESSEE METRIC D.O.T.

ALL UNITS ARE IN MILLIMETERS UNLESS NOTED OTHERWISE.

MINOR REVISION -- FHWA APPROVAL NOT REQUIRED.

STATE OF TENNESSEE
DEPARTMENT OF TRANSPORTATION

STANDARD LIGHTING DETAILS-FOUNDATIONS

11-1-95 | TM-L-1

11/3/2004
$$$$DGNSPEC$$$$