- REV. 11-1-95: CHANGED TO METRIC.
- REV. 10-26-96: CHANGED PAY ITEM NO. IN GENERAL NOTE (M).
- REV. 5-27-01: CHANGED NOTE UNDER SHIM DETAIL.
- REV. 5-27-03: CORRECTED GENERAL NOTE (H).

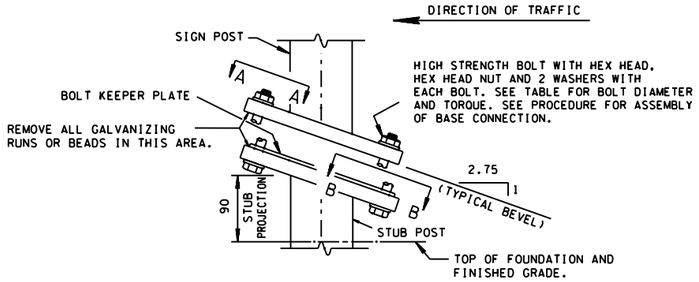

SIGN POST AND STUB POST BASE CONNECTION DETAIL ELEVATION VIEW
(FOR SQUARE TUBE SUPPORT POSTS)

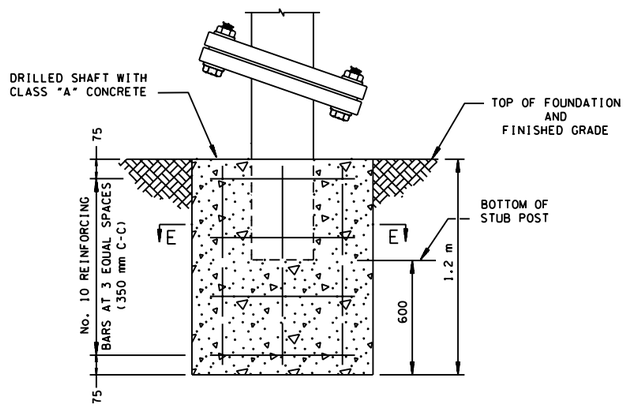

FOUNDATION AND FOOTING ELEVATION DETAIL FOR SQUARE TUBES
TYPE 4 FOOTING

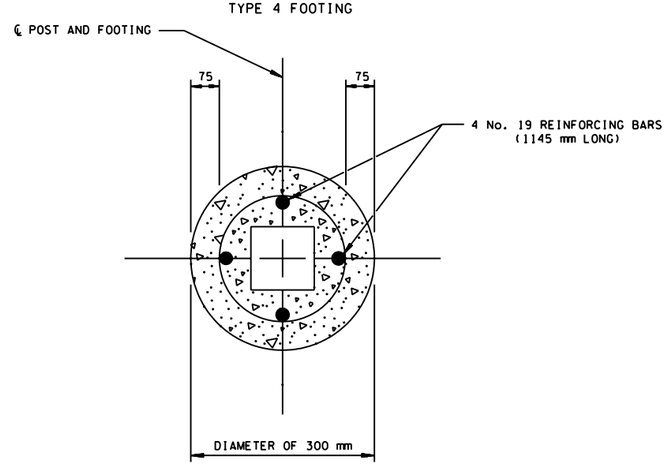

SECTION E-E
TYPE 4 FOOTING

PROCEDURE FOR ASSEMBLY OF BASE CONNECTION

1. ASSEMBLE POST TO STUB WITH BOLTS AND ONE BOLT KEEPER PLATE BETWEEN THEM.
2. SHIM AS REQUIRED TO PLUMB POST.
3. TIGHTEN ALL BOLTS THE MAXIMUM POSSIBLE WITH 300 mm TO 375 mm WRENCH TO BED WASHERS AND SHIMS AND TO CLEAN BOLT THREADS, THEN LOOSEN.
4. RETIGHTEN BOLTS IN A SYSTEMATIC ORDER TO THE PRESCRIBED TORQUE (SEE TABLE).
5. BURR THREADS AT JUNCTION WITH NUT USING A CENTER PUNCH TO PREVENT NUT LOOSENING.

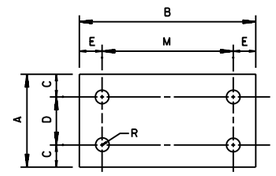

BOLT KEEPER PLATE
(28 GAUGE [0.47 mm THICK] GALVANIZED STEEL)

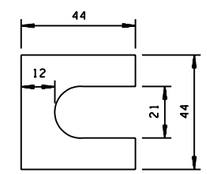

SHIM DETAIL

THE THICKNESS OF SHIMS SHALL NOT BE MORE THAN 0.8 mm NOR LESS THAN 0.3 mm AT ANY SINGLE BOLT. SHIMS SHALL BE FABRICATED FROM BRASS SHIM STOCK OR STRIP CONFORMING TO ASTM-B36M.

GENERAL NOTES

- (A) THE DESIGN CONFORMS WITH THE AASHTO STANDARD SPECIFICATIONS FOR STRUCTURAL SUPPORTS FOR HIGHWAY SIGNS, LUMINAIRES AND TRAFFIC SIGNALS (CURRENT EDITION).
- (B) THE MATERIALS AND FABRICATION SHALL CONFORM TO THE STANDARD SPECIFICATIONS OF THE TENNESSEE DEPARTMENT OF TRANSPORTATION.
- (C) ALL STEEL SHALL BE GALVANIZED AFTER FABRICATION IN ACCORDANCE WITH STANDARD SPECIFICATION ASTM-A123 FOR SIGN SUPPORTS.
- (D) ALL HIGH STRENGTH BOLTS AND WASHERS SHALL CONFORM TO STANDARD SPECIFICATION ASTM-A325M OR SAE GRADE 5.
- (E) ALL HIGH STRENGTH NUTS SHALL BE OF SUCH CAPACITY AS TO DEVELOP THE BOLT STRENGTH.
- (F) TIGHTEN THE HIGH STRENGTH BOLTS IN THE BASE CONNECTION ONLY TO THE TORQUE SHOWN. CAUTION - DO NOT OVERTIGHTEN.
- (G) ALL BOLT, NUTS AND WASHERS OTHER THAN LABELED HIGH STRENGTH SHALL CONFORM TO STANDARD SPECIFICATION ASTM-A307, CLASS A.
- (H) THE WELDING SHALL BE DONE IN ACCORDANCE WITH THE AASHTO STANDARD SPECIFICATIONS FOR STRUCTURAL SUPPORTS FOR HIGHWAY SIGNS, LUMINARIES AND TRAFFIC SIGNALS (CURRENT EDITION).
- (I) ALL BOLTS AND NUTS SHALL BE COATED WITH A SUITABLE LUBRICANT.
- (J) THE MATERIAL USED FOR STRUCTURAL SHAPES AND PLATES SHALL BE ASTM-A36M GRADE STEEL.
- (K) ALL HIGH STRENGTH BOLTS, NUTS AND WASHERS MAY BE CADMIUM PLATED IN ACCORDANCE WITH STANDARD SPECIFICATION ASTM-B766 OR GALVANIZED IN ACCORDANCE WITH STANDARD SPECIFICATION ASTM-A153.
- (L) CLASS "A" CONCRETE CONSTRUCTION AND MATERIALS SHALL MEET THE REQUIREMENTS OF THE "STANDARD SPECIFICATIONS FOR ROAD AND BRIDGE CONSTRUCTION OF THE TENNESSEE DEPARTMENT OF TRANSPORTATION, SECTION 604".
- (M) CLASS "A" CONCRETE AND REINFORCING STEEL USED IN CONJUNCTION WITH INSTALLATION OF THE SIGN SUPPORTS IS TO BE PAID FOR UNDER ITEM NO. 713M01.01, CLASS "A" CONCRETE (FOUNDATION FOR SIGN SUPPORTS) PER CUBIC METER, AND 713M01.02, STEEL BAR REINFORCEMENT (FOUNDATION FOR SIGN SUPPORTS) PER KILOGRAM.
- (N) CLASS "A" CONCRETE FOOTING SHALL BE PLACED ONLY ON UNDISTURBED MATERIAL OR IN FILL MATERIAL PLACED BY CONTROLLED COMPACTION AT DEPTHS UNAFFECTED BY FROST.
- (O) MATERIALS SURROUNDING FOOTING SHALL BE CAPABLE OF CARRYING A MINIMUM BEARING OF 120000 Pa. WHERE SOLID ROCK IS ENCOUNTERED, FOOTING SHALL BE LENGTH SHOWN ON THE SIGN SCHEDULE SHEET OR EXTEND A MINIMUM OF 600 mm INTO THE ROCK.

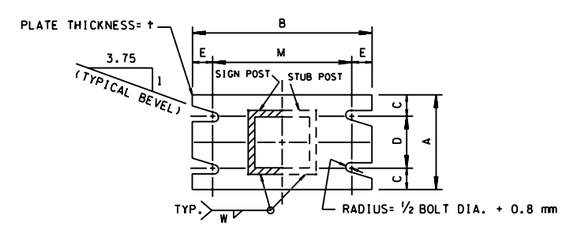

SECTION A-A SECTION B-B
SEE TABLE FOR DIMENSIONS

SECTIONS SHOWN ARE FOR INSTALLATIONS ON RIGHT SHOULDER AND IN GORE AREAS. PLATE SLOT LEVELS ARE OPPOSITE HAND FROM THAT SHOWN FOR INSTALLATIONS ON LEFT SHOULDER.

TUBE SIZE	BASE CONNECTION DIMENSIONS									FOUNDATION
	BOLT SIZE AND TORQUE	A	B	C	D	E	M	t	W	DIAMETER OF TYPE 4 FOOTING
50 mm SQ.	M13 x 50 mm TORQUE= 10.7 N·m TO 16.0 N·m	114	159	25	64	19	121	13	6	300 mm
64 mm SQ.		114	184	25	64	19	146	13	8	
75 mm SQ.	M13 x 64 mm TORQUE= 10.7 N·m TO 16.0 N·m	114	203	25	64	19	165	19	8	

ALL UNITS ARE IN MILLIMETERS UNLESS NOTED OTHERWISE.

MINOR REVISION -- FHWA APPROVAL NOT REQUIRED.

STATE OF TENNESSEE
DEPARTMENT OF TRANSPORTATION

STANDARD STEEL GROUND MOUNTED SIGNS, BREAK-AWAY TYPE POST FOOTING DETAILS, SQUARE TUBES

11-1-95 | TM-S-12

2/22/2005
DGNSPEC