- REV. 11-1-95: CHANGED TO METRIC.
- REV. 7-29-96: CHANGED DEPTH OF EMBEDMENT OF POST FOR DIAMOND SIGNS.
- REV. 12-18-97: CHANGED GENERAL NOTE (A) REGARDING PAY ITEM NUMBERS.
- REV. 5-27-01: CHANGED GENERAL NOTE (A).

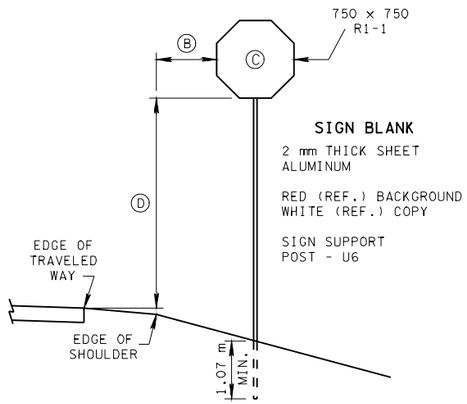

STOP SIGN DETAIL

SEE NOTE (A)

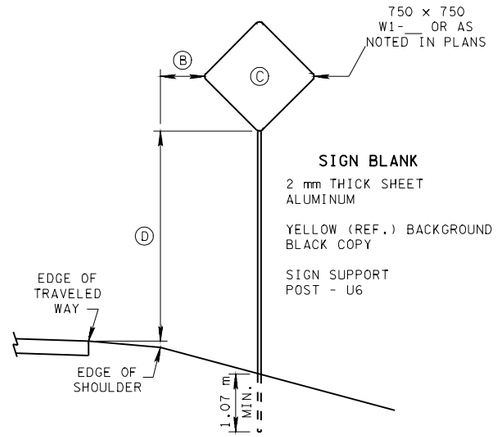

750 mm x 750 mm DIAMOND SIGN DETAIL

SEE NOTE (A)

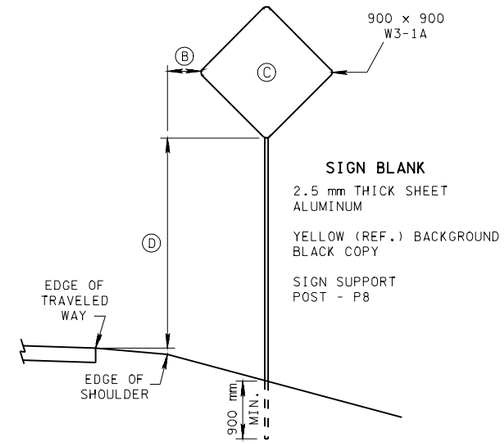

900 mm x 900 mm DIAMOND SIGN DETAIL

SEE NOTE (A)

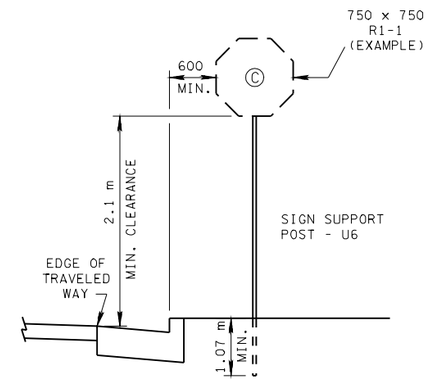

TYPICAL CURB & GUTTER SECTION SIGN DETAIL

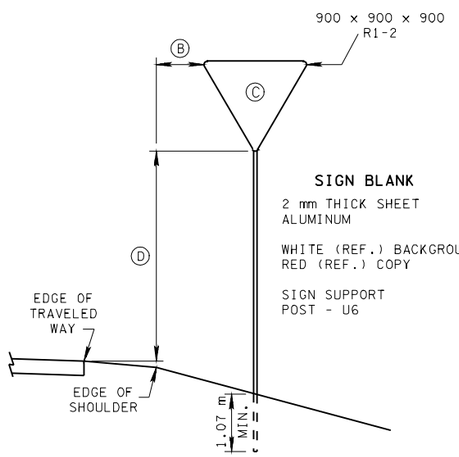

YIELD SIGN DETAIL

SEE NOTE (A)

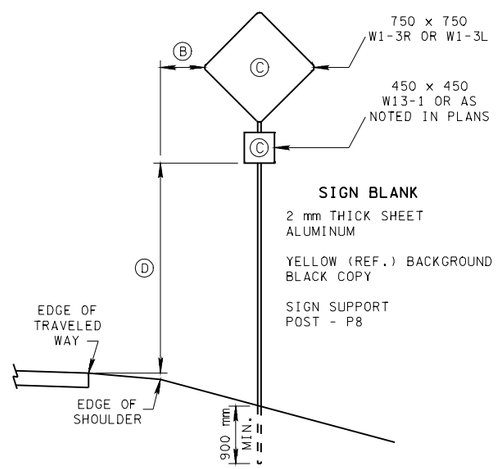

SUPPLEMENTAL PLATE DETAIL

SEE NOTE (A)

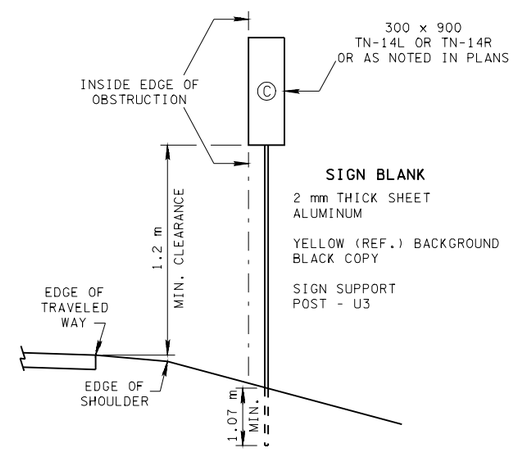

OBJECT MARKER

SEE NOTE (A)

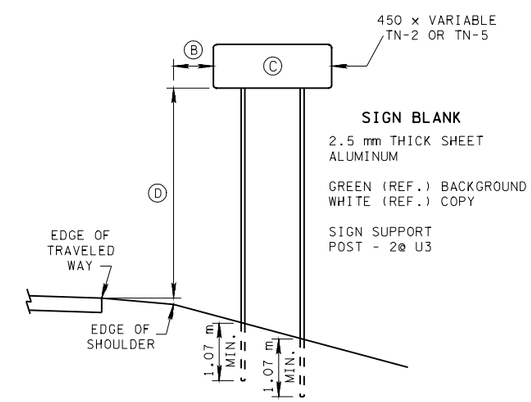

STREAM OR COUNTY LINE SIGN DETAIL

SEE NOTE (A)

GENERAL NOTES

(A) SIGN FACE, SUPPORT, INSTALLATION, AND HARDWARE INCLUDED IN ITEM NOS. 713M16.20 THROUGH 713M16.29 SIGNS (DESCRIPTION) PER EACH.

(B) 1.8 m DESIRABLE FROM EDGE OF SHOULDER, OR IF NONE, 3.6 m DESIRABLE FROM EDGE OF TRAVELED WAY (SEE CURRENT EDITION MUTCD SECTIONS 2A-21 AND 2A-24). 1.2 m DESIRABLE FROM FACE OF GUARDRAIL.

(C) LETTERS, BORDERS, AND ALPHABET ACCESSORIES SHALL BE APPLIED BY SILK SCREENING PROCESS.

(D) SIGNS ERECTED AT THE SIDE OF THE ROAD IN RURAL DISTRICTS SHALL BE MOUNTED AT A HEIGHT OF AT LEAST 1.5 m, MEASURED FROM THE BOTTOM OF THE SIGN TO THE NEAR EDGE OF THE PAVEMENT. IN BUSINESS, COMMERCIAL, AND RESIDENTIAL DISTRICTS WHERE PARKING AND/OR PEDESTRIAN MOVEMENT IS LIKELY TO OCCUR OR WHERE THERE ARE OTHER OBSTRUCTIONS TO VIEW, THE CLEARANCE TO THE BOTTOM OF THE SIGN SHALL BE AT LEAST 2.1 m. THE HEIGHT TO THE BOTTOM OF A SECONDARY SIGN MOUNTED BELOW ANOTHER SIGN MAY BE 300 mm LESS THAN THE APPROPRIATE HEIGHT SPECIFIED ABOVE.

TENNESSEE METRIC D.O.T.

ALL UNITS ARE IN MILLIMETERS UNLESS NOTED OTHERWISE.

☐ MINOR REVISION -- FHWA APPROVAL NOT REQUIRED.

STATE OF TENNESSEE
DEPARTMENT OF TRANSPORTATION

SIGN DETAILS

NOT TO SCALE

11-1-95 | TM-S-20