☐ REV. 11-1-95: CHANGED TO METRIC.
☐ REV. 2-14-99: REVISED GENERAL NOTE (K).

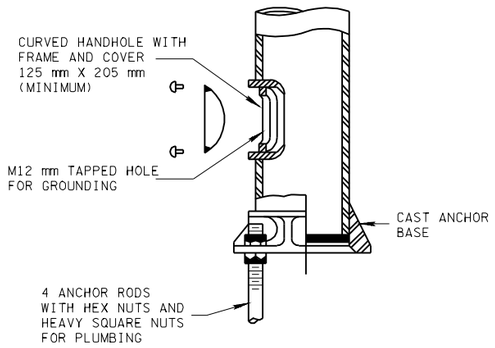

HANDHOLE DETAIL

GENERAL NOTES

(A) ALL STEEL POLES SHALL CONFORM TO "STANDARD SPECIFICATIONS FOR ROAD AND BRIDGE CONSTRUCTION" OF THE TENNESSEE DEPARTMENT OF TRANSPORTATION, SECTION 730-TRAFFIC SIGNALS.

(B) STRAIN POLES SHALL BE DESIGNED ACCORDING TO AASHTO STANDARD SPECIFICATIONS FOR STRUCTURAL SUPPORTS FOR HIGHWAY SIGNS, LUMINAIRES AND TRAFFIC SIGNALS (CURRENT EDITION).

(C) THE CONTRACTOR SHALL FURNISH POLES DESIGNED FOR A WIND VELOCITY AS FOLLOWS:
REGIONS 1, 2 AND 3...130 km/h
REGION 4.....113 km/h

(D) ANCHOR BOLTS SHALL BE DESIGNED BY THE POLE FABRICATOR. THEY SHALL BE CAPABLE OF RESISTING THE FULL BENDING MOMENT OF THE SHAFT AT ITS YIELD STRENGTH STRESS.

(E) THE COST OF ALL FOOTING MATERIALS AND INSTALLATION SHALL BE INCLUDED IN THE PRICE BID FOR STEEL STRAIN POLES.

(F) THE CONTRACTOR SHALL SUBMIT SHOP DRAWINGS AND NOTES TO THE ENGINEER OF STRUCTURES FOR APPROVAL PRIOR TO FABRICATION.

(G) ELECTRICAL SERVICE SHALL BE RUN INSIDE STEEL POLE.

(H) THE MOMENT CAPACITY OF THE POLE AND THE FOOTING DEPTH SHALL BE AS SPECIFIED IN THE PLANS.

(I) CANTILEVER SIGNAL SUPPORTS SHALL BE DESIGNED BY THE POLE FABRICATOR.

(J) TOP OF FOOTING SHALL BE FLUSH IN SIDEWALK OR PAVED ISLANDS. TOP OF FOOTING SHALL NOT EXTEND MORE THAN 100 mm ABOVE THE GROUND LINE IN OTHER AREAS.

(K) IF ROCK IS ENCOUNTERED WHILE DRILLING FOR FOOTING, AND CORE AND THE DRILLING INDICATES ROCK IS SOLID, DRILL SIX 29 mm DIAMETER HOLES INTO ROCK A MINIMUM DISTANCE OF 0.91 METERS. FILL HOLES WITH A-B EPOXY MIX AND ROTATE THE A2200 BARS UNTIL FULL DEPTH IS ACHIEVED. THE A-B EPOXY MIX SHALL BE APPROVED BY TENNESSEE DEPARTMENT OF TRANSPORTATION, MATERIALS AND TEST DIVISION. GROUND ROD MAY BE PLACED HORIZONTALLY, AS DEEP AS ROCK ALLOWS, WITH A 75 mm MINIMUM SEPARATION FROM ANY CONDUIT.

ESTIMATED FOOTING QUANTITIES FOR STRAIN POLE

FOOTING DEPTH (METERS)	T1300 REINFORCING BARS			A2200 REINFORCING BARS			CONCRETE (CUBIC METERS)
	NUMBER OF BARS	LENGTH OF EACH BAR IN METERS	TOTAL WEIGHT IN KILOGRAMS	NUMBER OF BARS	LENGTH OF EACH BAR IN METERS	TOTAL WEIGHT IN KILOGRAMS	
1.225	4	2.690	10.70	6	1.075	19.62	0.80
1.375	5	2.690	13.37	6	1.225	22.36	0.90
1.525	5	2.690	13.37	6	1.375	25.10	1.00
1.675	6	2.690	16.04	6	1.525	27.83	1.10
1.825	6	2.690	16.04	6	1.675	30.57	1.20
1.980	7	2.690	18.72	6	1.825	33.31	1.30
2.135	7	2.690	18.72	6	1.980	36.14	1.40
2.290	8	2.690	21.39	6	2.135	38.97	1.50
2.440	8	2.690	21.39	6	2.290	41.80	1.60
2.590	9	2.690	24.06	6	2.440	44.53	1.70
2.745	9	2.690	24.06	6	2.590	47.27	1.80
2.900	10	2.690	26.74	6	2.745	50.10	1.90
3.050	10	2.690	26.74	6	2.900	52.93	2.00
3.200	11	2.690	29.41	6	3.050	55.67	2.10
3.350	11	2.690	29.41	6	3.200	58.41	2.20
3.505	12	2.690	32.09	6	3.350	61.14	2.30
3.660	12	2.690	32.09	6	3.505	63.97	2.40
3.810	13	2.690	34.76	6	3.660	66.80	2.50
3.960	13	2.690	34.76	6	3.810	69.54	2.60
4.115	14	2.690	37.43	6	3.960	72.28	2.70
4.265	14	2.690	37.43	6	4.115	75.11	2.80
4.420	15	2.690	40.11	6	4.265	77.84	2.90
4.570	15	2.690	40.11	6	4.420	80.67	3.00
4.725	16	2.690	42.78	6	4.570	83.41	3.10
4.875	16	2.690	42.78	6	4.725	86.24	3.20
5.030	17	2.690	45.45	6	4.875	88.98	3.30
5.180	17	2.690	45.45	6	5.030	91.81	3.40
5.335	18	2.690	48.13	6	5.180	94.55	3.50
5.485	18	2.690	48.13	6	5.335	97.37	3.60
5.640	19	2.690	50.80	6	5.485	100.11	3.70
5.790	19	2.690	50.80	6	5.640	102.94	3.80
5.945	20	2.690	53.48	6	5.790	105.68	3.90
6.100	20	2.690	53.48	6	5.945	108.51	4.00
6.250	21	2.690	56.15	6	6.100	111.34	4.10
6.400	21	2.690	56.15	6	6.250	114.08	4.20
6.555	22	2.690	58.82	6	6.400	116.81	4.30
6.705	22	2.690	58.82	6	6.555	119.64	4.40
6.860	23	2.690	61.50	6	6.705	122.38	4.50
7.010	23	2.690	61.50	6	6.860	125.21	4.60
7.165	24	2.690	64.17	6	7.010	127.94	4.70
7.315	24	2.690	64.17	6	7.165	130.78	4.80
7.470	25	2.690	66.85	6	7.315	133.51	4.90
7.620	25	2.690	66.85	6	7.470	136.34	5.00

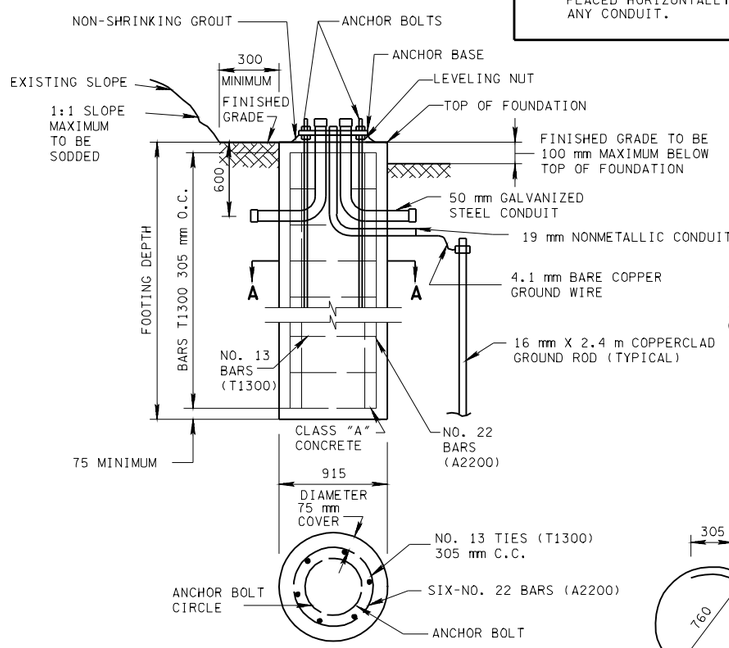

SECTION A-A

FOOTING DETAIL FOR STRAIN POLE

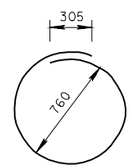

T1300 BARS SHALL LAP 305 mm

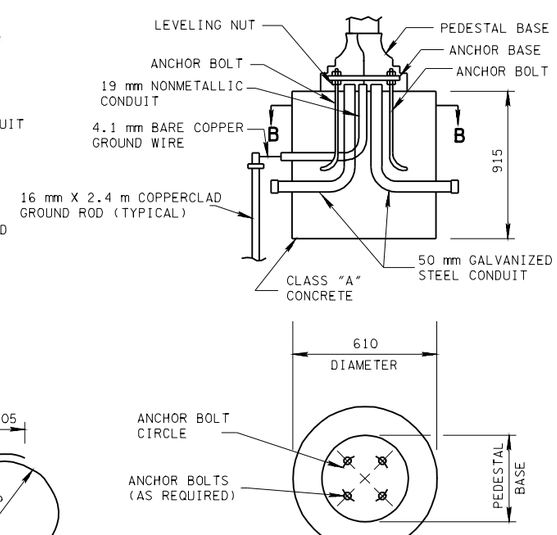

SECTION B-B

FOOTING DETAIL FOR STEEL PEDESTAL POLE

ALL UNITS ARE IN MILLIMETERS UNLESS NOTED OTHERWISE.

☐ MINOR REVISION -- FHWA APPROVAL NOT REQUIRED.

STATE OF TENNESSEE
DEPARTMENT OF TRANSPORTATION

DETAILS AND NOTES FOR STRAIN POLES

11-1-95 | TM-SG-10