REV. 11-1-95: CHANGED TO METRIC.

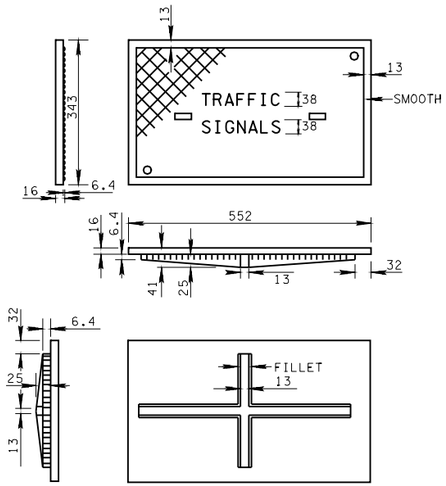

EXTRA HEAVY COVER

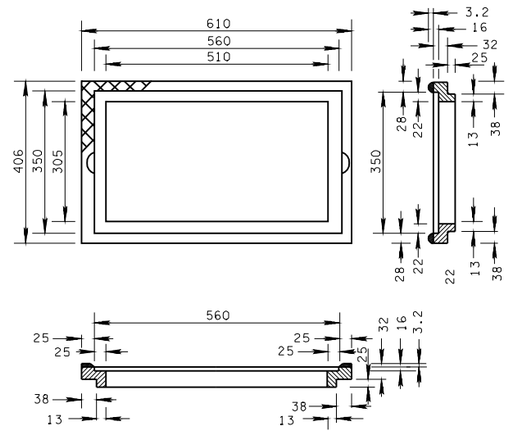

FRAME

CASTING WEIGHTS

FRAME.....19 kg

EXTRA HEAVY COVER.....24.5 kg

TOTAL WEIGHT..43.5 kg

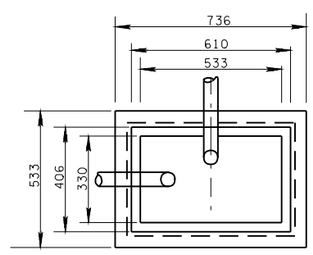

PLAN
FRAME REMOVED

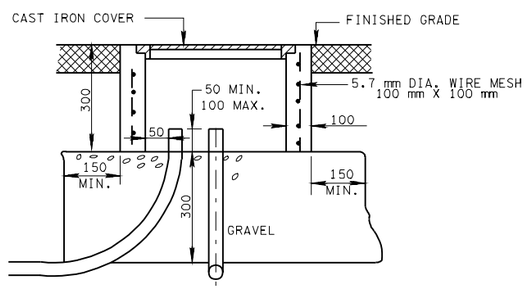

ELEVATION

PULL BOX DETAILS

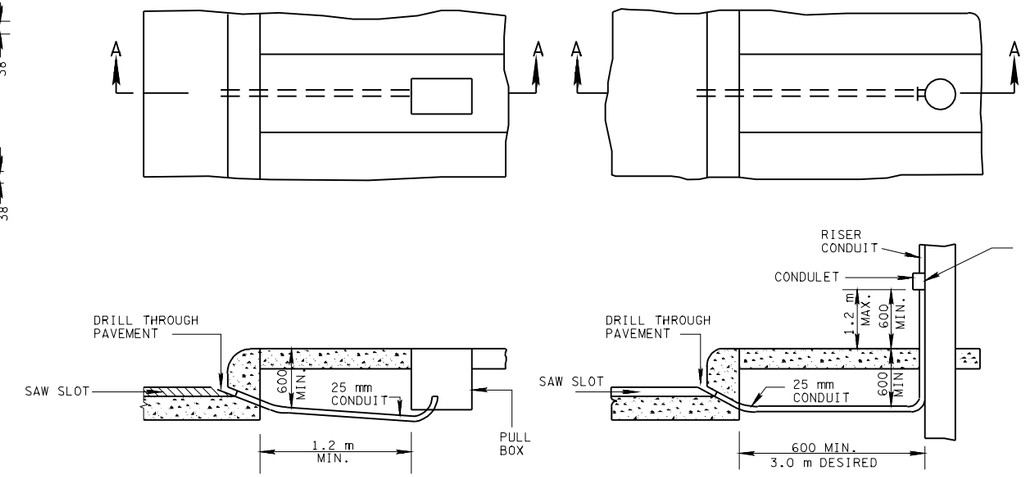

UNDERGROUND INSTALLATION
SECTION A-A

OVERHEAD INSTALLATION
SECTION A-A

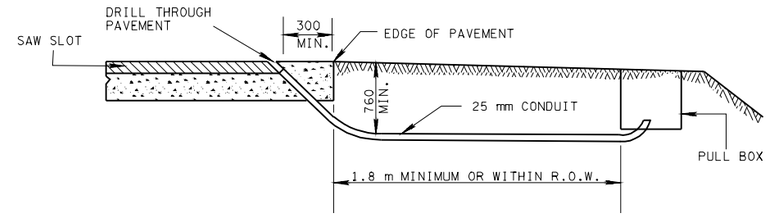

UNDERGROUND INSTALLATION

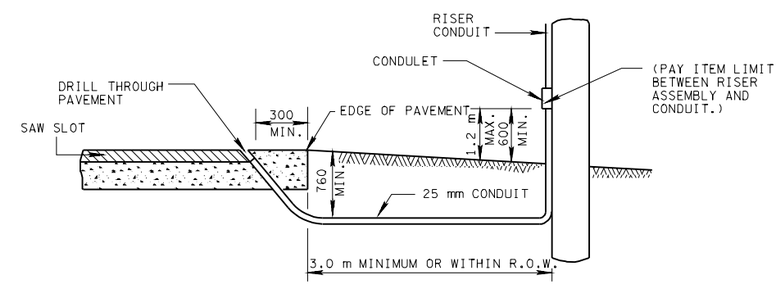

OVERHEAD INSTALLATION

TYPICAL INSTALLATIONS FOR LOOP LEAD-INS

ALL UNITS ARE IN MILLIMETERS UNLESS NOTED OTHERWISE.

MINOR REVISION -- FHWA APPROVAL NOT REQUIRED.

STATE OF TENNESSEE
DEPARTMENT OF TRANSPORTATION

LOOP LEAD-INS
AND
PULL BOXES

11-1-95 | TM-SG-2