DETECTION LOOP NOTES

(A) THE DETECTION LOOPS SHALL BE OF THE SIZE AND LOCATION DETAILED IN THE PLANS UNLESS OTHERWISE DIRECTED BY THE ENGINEER.

(B) THE CONTRACTOR SHALL INSTALL LOOPS BY WET CUTTING A NARROW SLOT (10 mm WIDE) IN THE ROADWAY SURFACE WITH A DIAMOND SAW, INSTALLING THE WIRE AND BACKFILLING WITH A SUITABLE SEALER. SAW SLOTS SHALL BE A MINIMUM OF 75 mm IN DEPTH IN BITUMINOUS PAVEMENT, AND A MINIMUM OF 64 mm IN DEPTH IN CONCRETE PAVEMENT.

(C) THE CONTRACTOR SHALL EXERCISE CARE IN PLACING THE DETECTION LOOPS AND LEAD-INS IN THE PAVEMENT SLOTS. FILTERED COMPRESSED AIR SHALL BE USED TO REMOVE ALL DUST AND MOISTURE FROM THE SLOT. A FOAM BACKER ROD OR FLEXIBLE TUBING SHALL BE PLACED IN THE BOTTOM OF THE SLOT. THE LOOP WIRE WILL THEN BE PUSHED INTO THE SLOTS WITHOUT THE USE OF SHARP OBJECTS WHICH MIGHT DAMAGE THE WIRE INSULATION. USE OF METAL TOOLS ARE NOT PERMITTED.

(D) WHERE THE DETECTION LOOPS OR LEAD-INS CROSS A PAVEMENT CRACK OR JOINT, A CONTINUOUS INSULATING SLEEVE SHALL BE INSTALLED OVER THE WIRE TO PREVENT IT FROM BONDING TO THE PAVEMENT.

(E) THE DETECTION LOOPS IN ANY GIVEN TRAFFIC LANE SHALL BE WIRED TOGETHER IN SERIES TO ENTER ONE DETECTOR AMPLIFIER UNLESS OTHERWISE NOTED ON THE PLANS. IF THE MANUFACTURER OF THE RELATED DETECTOR SENSOR UNIT RECOMMENDS ANOTHER WIRING SCHEME, APPROVAL SHALL BE OBTAINED FROM THE ENGINEER BEFORE CHANGING THE WIRING.

(F) BEFORE THE SLOTS ARE SEALED, THE RESISTANCE OF THE DETECTION LOOPS AND LEAD-INS (INCLUDING SPLICES) SHALL BE CHECKED AGAINST GROUND WITH A MEGGAR. A RESISTANCE OF LESS THAN TEN MEGAOHMS WILL INDICATE A FAULT REQUIRING CORRECTION BEFORE THE SLOT IS SEALED.

(G) ALSO BEFORE THE SLOTS ARE SEALED, THE INDUCTANCE OF THE DETECTION LOOP AND LEAD-INS SHALL BE CHECKED AT THE LOCATION OF THE DETECTOR SENSOR UNIT. THE INDUCTANCE SHALL BE NO LESS THAN 50 MICROHENRIES AND NO MORE THAN 300 MICROHENRIES. IF IT MEASURES OUT OF THIS RANGE, THE SPLICING OF THE LOOPS (SERIES AND/OR PARALLEL) SHALL BE CHANGED TO PROVIDE AN INDUCTANCE READING BETWEEN 50 AND 300 MICROHENRIES.

(H) AFTER THE LOOP WIRES ARE INSTALLED AND ALL CHECKS SATISFACTORILY COMPLETED, A 25 mm STRIP OF BACKER ROD OR FLEXIBLE TUBING SHALL BE INSERTED AT APPROXIMATE 600 mm INTERVALS TO HOLD THE LOOP IN PLACE. THESE HOLD DOWN STRIPS SHALL BE A MINIMUM OF 13 mm FROM THE PAVEMENT SURFACE. THE SLOT SHALL THEN BE BACKFILLED AND SEALED WITH AN APPROVED LOOP SEALANT TO WITHIN 3 mm OF THE PAVEMENT SURFACE. SURPLUS SEALENT SHALL BE REMOVED FROM THE ADJACENT ROAD SURFACE WITHOUT THE USE OF SOLVENTS.

(I) LOOPS AND LEAD-INS TO PULL BOXES SHALL BE ONE CONTINUOUS LENGTH OF 1.63 mm STRANDED XHHW CROSS-LINK POLYETHYLENE SINGLE CONDUCTOR WIRE. THE LEAD-INS TO THE PULL BOX SHALL BE TWISTED 10 TIMES PER METER.

(J) SPLICES SHALL BE PERMITTED ONLY IN PULL BOXES, POLE BASES, CONDULETS, OR CABINETS AND SHALL BE WATERPROOF.

(K) ALL LEADS FROM PULL BOX TO CONTROLLER SHALL CONSIST OF A TWISTED PAIR OF SHIELDED CABLES, 1.63 mm AWG STRANDED, WHICH MEET THE REQUIREMENTS OF I.M.S.A. SPECIFICATION #19-2.

(L) LOOP LEADS SHALL NOT BE COILED IN PULL BOXES OR HANDHOLES. TERMINAL BLOCKS SHALL BE USED FOR ALL CONNECTIONS IN EQUIPMENT CABINETS.

(M) LOOP WIRES AND LEAD-INS ARE TO BE COLOR-CODED. ALL LEADS ARE TO BE TAGGED IN PULL BOXES AND CONTROLLER CABINETS.

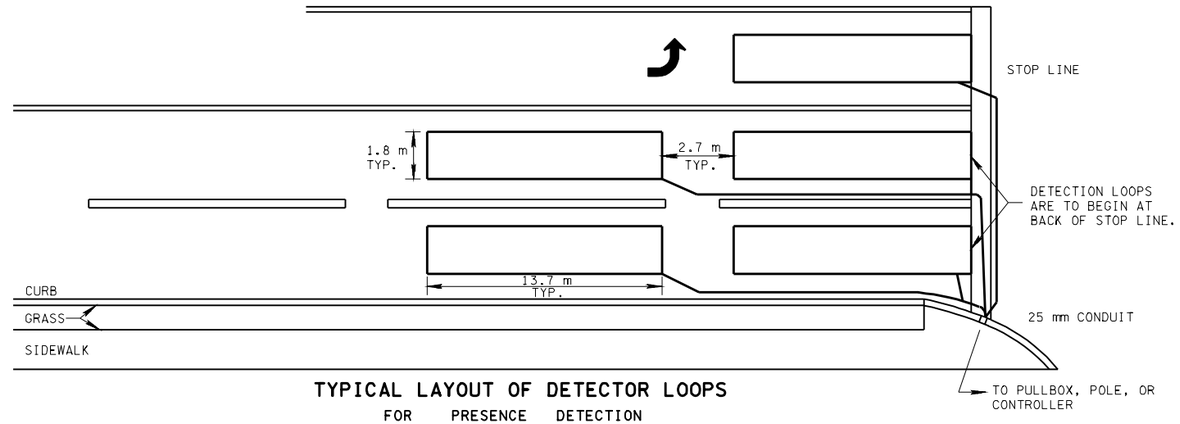

TYPICAL LAYOUT OF DETECTOR LOOPS
FOR PRESENCE DETECTION
*** REFER TO TM-SG-2 FOR PULL BOX CONDUIT DETAILS

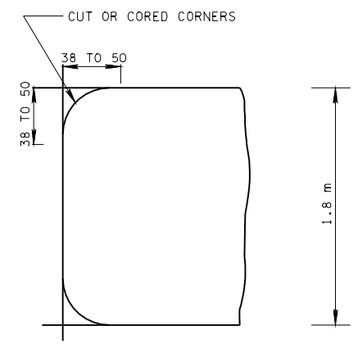

SAW CUT DIAGRAM

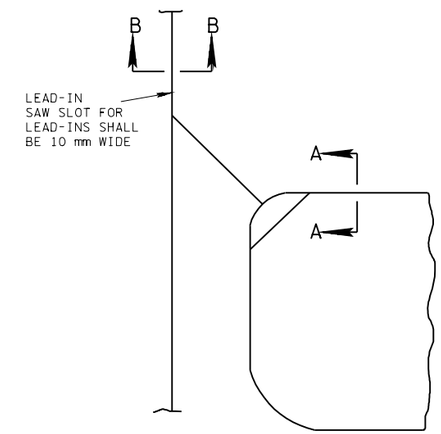

LOOP WIRE PLAN

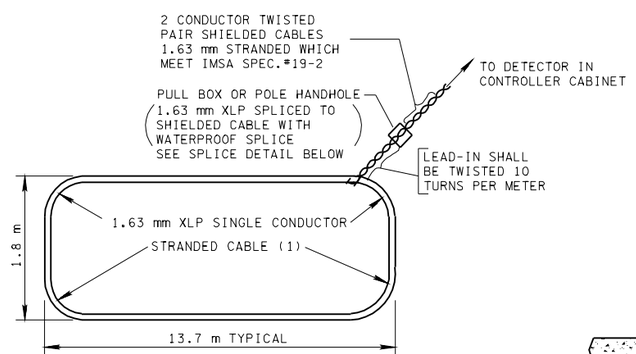

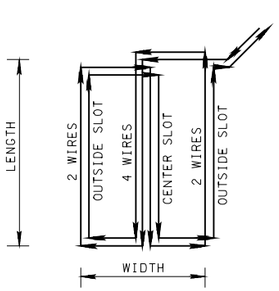

QUADRUPOLE LOOP WIRE ROUTING

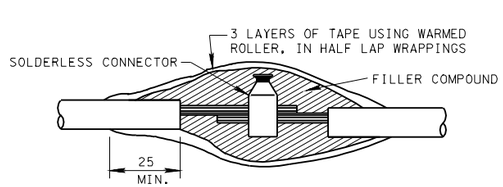

TYPICAL SPLICING & TAPING DETAILS

NOTE: COMPRESSION FITTING CONNECTOR KITS OR EQUAL MAY BE USED AS ALTERNATE.

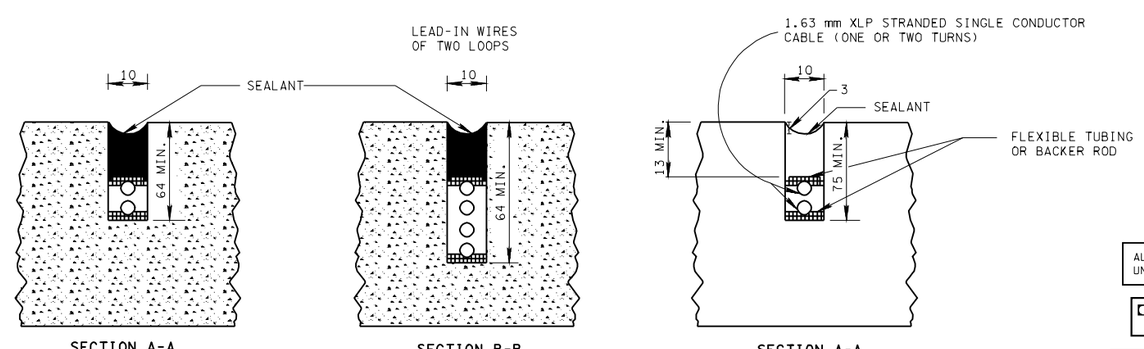

LOOP IN CONCRETE

LOOP IN ASPHALT

TYPICAL SAW SLOT DETAIL

ALL UNITS ARE IN MILLIMETERS UNLESS NOTED OTHERWISE.

MINOR REVISION -- FHWA APPROVAL NOT REQUIRED.

STATE OF TENNESSEE
DEPARTMENT OF TRANSPORTATION

STANDARD NOTES AND DETAILS OF DETECTION LOOPS

11-1-95 | TM-SG-3