CONST. NO. _____

| PROJECT NO. | YEAR | SHEET NO. |
|---|---|---|
| | 2010 | |

REVISIONS

| NO. | DATE | BY | BRIEF DESCRIPTION |
|---|---|---|---|
| | | | |

## 2 @ 12 x 7 REINFORCED CONCRETE SLAB BRIDGE

| | Fill Height ft. | Dimensions ST in. | WT in. | IT in. | BW ft. | Bars TST Size | No. | Spacing in. | Length ft. | Bars TSB Size | No. | Spacing in. | Length ft. | Bars EWE Size | No. | Spacing in. | Length ft. | Bars EWI Size | No. | Spacing in. | Length ft. | Bars IW Size | No. | Spacing in. | Length ft. | Bars LNT No. | Bars LND No. | Bars WS No. | Bars WF No. | Bars EWF Length ft. | Bars IWF Length ft. | Concrete CY/LF | Reinf. Steel LB/LF |
|---|---|---|---|---|---|---|---|---|---|---|---|---|---|---|---|---|---|---|---|---|---|---|---|---|---|---|---|---|---|---|---|---|---|
| Continuous | No Fill | 10.5 | 8 | 8 | 26.00 | 7 | 2 | 6 | 25.50 | 7 | 2 | 6 | 25.50 | 4 | 2 | 12 | 5.50 | 5 | 2 | 12 | 5.50 | 4 | 2 | 12 | 5.50 | 65 | 48 | 3 | 3 | 1.67 | 1.67 | 1.61 | 402 |
| | 3 | 14 | 8 | 8 | 26.00 | 7 | 2 | 6 | 25.50 | 7 | 2 | 6 | 25.50 | 4 | 2 | 12 | 5.50 | 5 | 2 | 12 | 5.50 | 4 | 2 | 12 | 5.50 | 65 | 48 | 3 | 3 | 1.67 | 1.67 | 1.89 | 402 |
| | 5 | 14 | 8 | 8 | 26.00 | 7 | 2 | 6 | 25.50 | 6 | 2 | 6 | 25.50 | 4 | 2 | 12 | 5.50 | 5 | 2 | 12 | 5.50 | 4 | 2 | 12 | 5.50 | 91 | 0 | 3 | 3 | 1.67 | 1.67 | 1.89 | 359 |
| | 10 | 16 | 8 | 8 | 26.00 | 8 | 2 | 6 | 25.50 | 6 | 2 | 6 | 25.50 | 4 | 2 | 12 | 5.50 | 5 | 2 | 12 | 5.50 | 4 | 2 | 12 | 5.50 | 91 | 0 | 3 | 3 | 1.67 | 1.67 | 2.05 | 391 |
| Moment Break | 20 | 16 | 8 | 8 | 26.00 | 4 | 2 | 12 | 12.67 | 9 | 2 | 6 | 25.50 | 4 | 2 | 12 | 5.50 | 5 | 2 | 12 | 5.50 | 4 | 2 | 12 | 5.50 | 91 | 0 | 3 | 3 | 1.67 | 1.67 | 2.05 | 369 |
| | 30 | 21 | 8 | 8 | 26.00 | 4 | 2 | 12 | 12.67 | 8 | 2 | 6 | 25.50 | 4 | 2 | 12 | 5.50 | 5 | 2 | 12 | 5.50 | 5 | 2 | 12 | 5.50 | 91 | 0 | 3 | 3 | 1.67 | 1.67 | 2.45 | 336 |
| | 40 | 26 | 9 | 8 | 26.17 | 4 | 2 | 12 | 12.67 | 8 | 2 | 6 | 25.67 | 4 | 2 | 12 | 5.50 | 5 | 2 | 12 | 5.50 | 4 | 4 | 6 | 5.50 | 91 | 0 | 3 | 3 | 1.75 | 1.67 | 2.91 | 340 |
| | 50 | 31 | 10 | 8 | 26.33 | 4 | 2 | 12 | 12.67 | 8 | 2 | 6 | 25.83 | 4 | 2 | 12 | 5.50 | 5 | 2 | 12 | 5.50 | 7 | 2 | 12 | 5.50 | 91 | 0 | 3 | 3 | 1.83 | 1.67 | 3.37 | 349 |
| | 60 | 34 | 10 | 8 | 26.33 | 4 | 2 | 12 | 12.67 | 9 | 2 | 6 | 25.83 | 4 | 2 | 12 | 5.50 | 5 | 2 | 12 | 5.50 | 7 | 2 | 12 | 5.50 | 91 | 0 | 3 | 3 | 1.83 | 1.67 | 3.62 | 386 |

## 2 @ 12 x 8 REINFORCED CONCRETE SLAB BRIDGE

| | Fill Height ft. | Dimensions ST in. | WT in. | IT in. | BW ft. | Bars TST Size | No. | Spacing in. | Length ft. | Bars TSB Size | No. | Spacing in. | Length ft. | Bars EWE Size | No. | Spacing in. | Length ft. | Bars EWI Size | No. | Spacing in. | Length ft. | Bars IW Size | No. | Spacing in. | Length ft. | Bars LNT No. | Bars LND No. | Bars WS No. | Bars WF No. | Bars EWF Length ft. | Bars IWF Length ft. | Concrete CY/LF | Reinf. Steel LB/LF |
|---|---|---|---|---|---|---|---|---|---|---|---|---|---|---|---|---|---|---|---|---|---|---|---|---|---|---|---|---|---|---|---|---|---|
| Continuous | No Fill | 10.5 | 8 | 8 | 26.00 | 7 | 2 | 6 | 25.50 | 7 | 2 | 6 | 25.50 | 4 | 2 | 12 | 6.50 | 5 | 2 | 12 | 6.50 | 4 | 2 | 12 | 6.50 | 71 | 48 | 3 | 3 | 1.67 | 1.67 | 1.69 | 410 |
| | 3 | 14 | 8 | 8 | 26.00 | 7 | 2 | 6 | 25.50 | 7 | 2 | 6 | 25.50 | 4 | 2 | 12 | 6.50 | 5 | 2 | 12 | 6.50 | 4 | 2 | 12 | 6.50 | 71 | 48 | 3 | 3 | 1.67 | 1.67 | 1.97 | 410 |
| | 5 | 14 | 8 | 8 | 26.00 | 7 | 2 | 6 | 25.50 | 6 | 2 | 6 | 25.50 | 4 | 2 | 12 | 6.50 | 5 | 2 | 12 | 6.50 | 4 | 2 | 12 | 6.50 | 97 | 0 | 3 | 3 | 1.67 | 1.67 | 1.97 | 368 |
| | 10 | 16 | 8 | 8 | 26.00 | 8 | 2 | 6 | 25.50 | 6 | 2 | 6 | 25.50 | 4 | 2 | 12 | 6.50 | 6 | 2 | 12 | 6.50 | 4 | 2 | 12 | 6.50 | 97 | 0 | 3 | 3 | 1.67 | 1.67 | 2.13 | 406 |
| Moment Break | 20 | 16 | 8 | 8 | 26.00 | 4 | 2 | 12 | 12.67 | 9 | 2 | 6 | 25.50 | 4 | 2 | 12 | 6.50 | 6 | 2 | 12 | 6.50 | 4 | 2 | 12 | 6.50 | 97 | 0 | 3 | 3 | 1.67 | 1.67 | 2.13 | 383 |
| | 30 | 21 | 9 | 8 | 26.17 | 4 | 2 | 12 | 12.67 | 8 | 2 | 6 | 25.67 | 4 | 2 | 12 | 6.50 | 6 | 2 | 12 | 6.50 | 5 | 2 | 12 | 6.50 | 97 | 0 | 3 | 3 | 1.75 | 1.67 | 2.59 | 352 |
| | 40 | 26 | 10 | 8 | 26.33 | 4 | 2 | 12 | 12.67 | 8 | 2 | 6 | 25.83 | 4 | 2 | 12 | 6.50 | 6 | 2 | 12 | 6.50 | 4 | 4 | 6 | 6.50 | 97 | 0 | 3 | 3 | 1.83 | 1.67 | 3.05 | 357 |
| | 50 | 31 | 11 | 8 | 26.50 | 4 | 2 | 12 | 12.67 | 8 | 2 | 6 | 26.00 | 4 | 2 | 12 | 6.50 | 5 | 2 | 12 | 6.50 | 7 | 2 | 12 | 6.50 | 97 | 0 | 3 | 3 | 1.92 | 1.67 | 3.53 | 361 |
| | 60 | 34 | 12 | 8 | 26.67 | 4 | 2 | 12 | 12.67 | 9 | 2 | 6 | 26.17 | 4 | 2 | 12 | 6.50 | 5 | 2 | 12 | 6.50 | 7 | 2 | 12 | 6.50 | 97 | 0 | 3 | 3 | 2.00 | 1.67 | 3.84 | 400 |

## 2 @ 12 x 9 REINFORCED CONCRETE SLAB BRIDGE

| | Fill Height ft. | Dimensions ST in. | WT in. | IT in. | BW ft. | Bars TST Size | No. | Spacing in. | Length ft. | Bars TSB Size | No. | Spacing in. | Length ft. | Bars EWE Size | No. | Spacing in. | Length ft. | Bars EWI Size | No. | Spacing in. | Length ft. | Bars IW Size | No. | Spacing in. | Length ft. | Bars LNT No. | Bars LND No. | Bars WS No. | Bars WF No. | Bars EWF Length ft. | Bars IWF Length ft. | Concrete CY/LF | Reinf. Steel LB/LF |
|---|---|---|---|---|---|---|---|---|---|---|---|---|---|---|---|---|---|---|---|---|---|---|---|---|---|---|---|---|---|---|---|---|---|
| Continuous | No Fill | 10.5 | 8 | 8 | 26.00 | 7 | 2 | 6 | 25.50 | 7 | 2 | 6 | 25.50 | 4 | 2 | 12 | 7.50 | 5 | 2 | 12 | 7.50 | 4 | 2 | 12 | 7.50 | 77 | 48 | 3 | 3 | 1.67 | 1.67 | 1.76 | 419 |
| | 3 | 14 | 8 | 8 | 26.00 | 7 | 2 | 6 | 25.50 | 7 | 2 | 6 | 25.50 | 4 | 2 | 12 | 7.50 | 5 | 2 | 12 | 7.50 | 4 | 2 | 12 | 7.50 | 77 | 48 | 3 | 3 | 1.67 | 1.67 | 2.04 | 419 |
| | 5 | 14 | 8 | 8 | 26.00 | 7 | 2 | 6 | 25.50 | 6 | 2 | 6 | 25.50 | 4 | 2 | 12 | 7.50 | 6 | 2 | 12 | 7.50 | 4 | 2 | 12 | 7.50 | 103 | 0 | 3 | 3 | 1.67 | 1.67 | 2.04 | 384 |
| | 10 | 16 | 8 | 8 | 26.00 | 8 | 2 | 6 | 25.50 | 6 | 2 | 6 | 25.50 | 4 | 2 | 12 | 7.50 | 6 | 2 | 12 | 7.50 | 4 | 2 | 12 | 7.50 | 103 | 0 | 3 | 3 | 1.67 | 1.67 | 2.20 | 416 |
| Moment Break | 20 | 16 | 8 | 8 | 26.00 | 4 | 2 | 12 | 12.66 | 9 | 2 | 6 | 25.50 | 4 | 2 | 12 | 7.50 | 6 | 4 | 6 | 7.50 | 4 | 2 | 12 | 7.50 | 103 | 0 | 3 | 3 | 1.67 | 1.67 | 2.20 | 416 |
| | 30 | 21 | 10 | 8 | 26.33 | 4 | 2 | 12 | 12.66 | 8 | 2 | 6 | 25.83 | 4 | 2 | 12 | 7.50 | 5 | 4 | 6 | 7.50 | 5 | 2 | 12 | 7.50 | 103 | 0 | 3 | 3 | 1.83 | 1.67 | 2.73 | 372 |
| | 40 | 26 | 11 | 8 | 26.50 | 4 | 2 | 12 | 12.66 | 8 | 2 | 6 | 26.00 | 4 | 2 | 12 | 7.50 | 7 | 2 | 12 | 7.50 | 4 | 4 | 6 | 7.50 | 103 | 0 | 3 | 3 | 1.92 | 1.67 | 3.21 | 377 |
| | 50 | 31 | 13 | 8 | 26.83 | 4 | 2 | 12 | 12.66 | 8 | 2 | 6 | 26.33 | 4 | 2 | 12 | 7.50 | 6 | 2 | 12 | 7.50 | 7 | 2 | 12 | 7.50 | 103 | 0 | 3 | 3 | 2.08 | 1.67 | 3.76 | 382 |
| | 60 | 34 | 14 | 8 | 27.00 | 4 | 2 | 12 | 12.66 | 9 | 2 | 6 | 26.50 | 4 | 2 | 12 | 7.50 | 7 | 2 | 12 | 7.50 | 7 | 2 | 12 | 7.50 | 105 | 0 | 3 | 3 | 2.17 | 1.67 | 4.08 | 431 |

Note: Maximum fill height is measured from the bottom of the top slab. To obtain the total fill height from the flow line, add the height of the box.
Note: When height of fill above the top slab is less than 1 foot, the top mat of reinforcing in the top slab shall be constructed with 2-1/2 inches of concrete cover.

The following bar information applies to all fill cases in the tables above:
Bars LNT Size = 4 Spacing = 12 in.
Bars LND Size = 4 Spacing = 6 in.
Bars WS Size = 8 Length = 5.00 ft. Spacing = 12 in.
Bars WF Size = 8 Length = 6.00 ft. Spacing = 12 in.
Bars IWF Size = 4 No. = 1 Spacing = 12 in.
Bars EWF Size = 4 No. = 2 Spacing = 12 in.

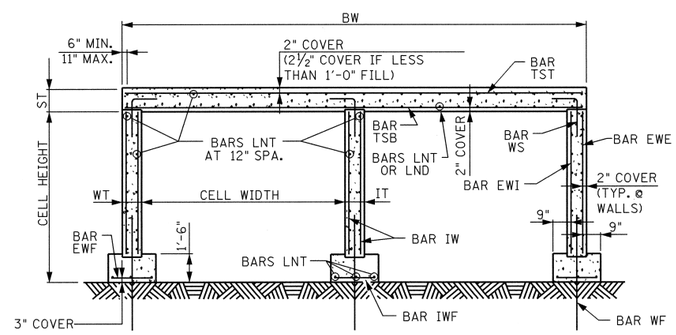


TYPICAL SECTION

NOTE: FOR DESCRIPTIONS OF BOX DIMENSIONS AND REINFORCING BAR DESIGNATIONS SEE STANDARD DRAWING NO. STD-17-5.

STATE OF TENNESSEE
**DEPARTMENT OF TRANSPORTATION**

STANDARD REINFORCED CONCRETE SLAB BRIDGE
INTERIOR SECTION
SPANS: 2 BARRELS AT 12'-0"
CLEAR HEIGHTS 7'-0" THRU 9'-0"
0' THRU 60' FILL
2010

CORRECT Edward P. Wasserman
ENGINEER OF STRUCTURES

| | | | |
|---|---|---|---|
| DESIGNED BY | RLL/ALP | DATE | 12-09 |
| DRAWN BY | KEVIN MARTINKO | DATE | 1-10 |
| SUPERVISED BY | EPW/RLC | DATE | 12-09 |
| CHECKED BY | RLL/ALP | DATE | 2-10 |

STD-17-137