TYPE	YEAR	PROJECT NO.	SHEET NO.
CONST.	2015	BH-I-40-4(86)	2T

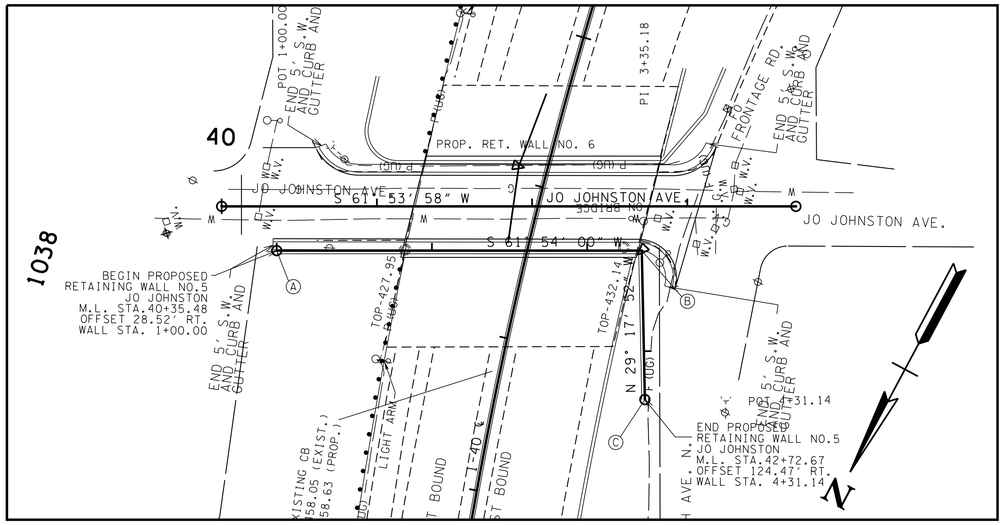

PLAN VIEW OF RETAINING WALL NO.5

CONTROL POINT DATA

CP-S58

N 667,519.1385

E 1,734,172.6320

STA. 1037+14.08

OFFSET 63.00' RT.

NOTE : THE RETAINING WALL PAY QUANTITY IS BASED ON THE SURFACE AREA OF CONCRETE FROM THE APPROXIMATE TOP OF WALL TO A MINIMUM OF 2' BELOW THE EXISTING/PROPOSED GROUND LINE.

ESTIMATED QUANTITIES FOR RETAINING WALL

ITEM NO.	604-07.05
DESCRIPTION	RETAINING WALL NO.5 S.F.
QUANTITY	6,850 S.F.

THE RETAINING WALL PAY QUANTITY INCLUDES 22' REINFORCED SELECT BACKFILL USED IN ALL FILL LOCATIONS. ALSO INCLUDES REMOVAL OF EXISTING 1' OF TOPSOIL AND TEXTURE COATING (630 SY).

UNDERCUTTING AND BACKFILLING WITH GRANULAR MATERIAL, FILL OUTSIDE OF THE REINFORCED ZONE AND TEMPORARY SHORING REQUIRED FOR CONSTRUCTION OF THE WALL ARE PAID IN SEPARATE PAY ITEMS.

PROPOSED WALL NO.5 ALIGNMENT

WALL STA.	CODE	LOCATION	M.L. STA.	N	E	M.L. OFFSET	FROM-TO	BEARING/RADIUS	LENGTH
1+00.00	Ⓐ	JO JOHNSTON	40+35.48	667,475.9756	1,734,414.9392	28.52' RT.	Ⓐ - Ⓑ	S 61°54'00" W	235.18
3+35.18	Ⓑ	JO JOHNSTON	42+70.66	667,365.2016	1,734,207.4774	28.53' RT.	Ⓑ - Ⓒ	N 29°17'52" W	95.96'
4+31.14	Ⓒ	JO JOHNSTON	42+72.67	667,448.8874	1,734,160.5193	124.47' RT.			

WALL NO.5 LOCATION STAKE-OUT POINTS

RET. WALL BASELINE STATION	JO JOHNSTON CENTERLINE STATION	N	E	JO JOHNSTON CENTERLINE REFERENCE	TOP RET. WALL ELEVATION	BOTTOM RET. WALL ELEVATION
1+00.00	40+35.48	667,475.9756	1,734,414.9392	28.52' RT.	427.87	423.49
1+80.86	41+16.44	667,437.8433	1,734,343.5237	28.52' RT.	459.62	425.49
2+00.00	41+35.48	667,428.8745	1,734,326.7265	28.52' RT.	455.28	425.49
3+00.00	42+35.48	667,381.7734	1,734,238.5138	28.53' RT.	451.58	429.49
3+32.91	42+68.39	667,366.2722	1,734,209.4826	28.53' RT.	452.86	429.49
3+35.18	42+70.66	667,365.2016	1,734,207.4774	28.53' RT.	452.76	429.49
4+00.00	42+72.02	667,421.7273	1,734,175.7595	93.33' RT.	444.82	435.49
4+31.14	42+72.67	667,448.8874	1,734,160.5193	124.47' RT.	443.02	439.49

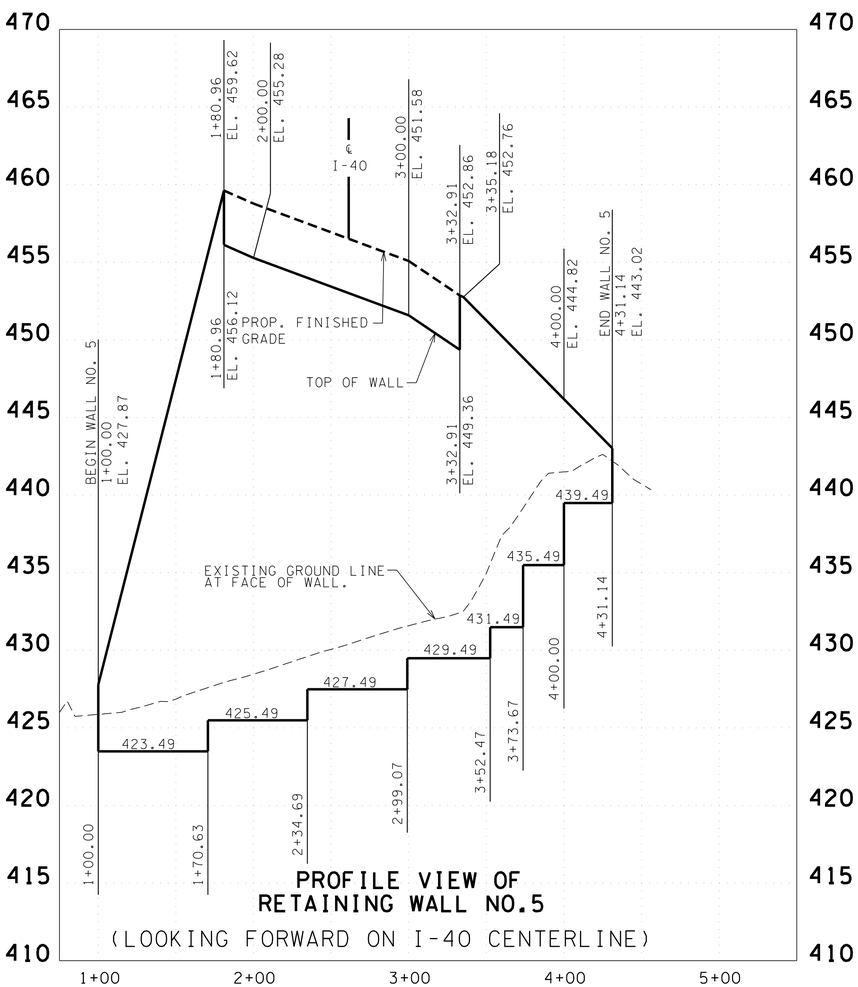

PROFILE VIEW OF RETAINING WALL NO.5

(LOOKING FORWARD ON I-40 CENTERLINE)

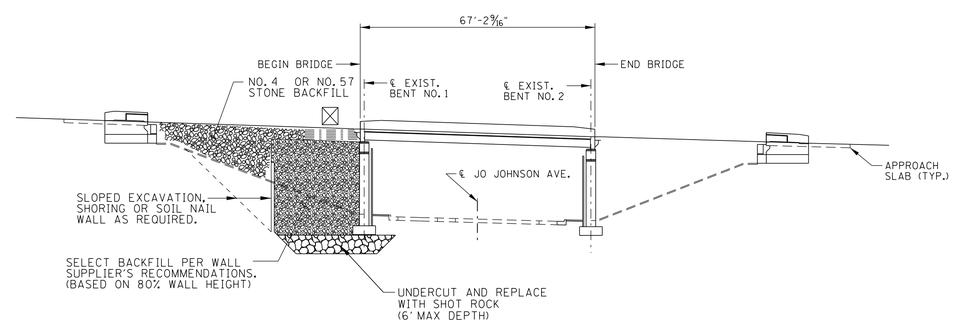

☒ NOTE: SLEEPER SLAB FOOTING FOR PAVEMENT AT BRIDGE ENDS MAY BE ELIMINATED WITH THE INSTALLATION GEOSYNTHETICALLY REINFORCED SOIL BACKFILL WITH BIAXIAL GEOGRID AT 4" LIFTS WITH SELECT BACKFILL.

SEE SHEETS 2X AND 2Y FOR ADDITONAL NOTES AND DETAILS

SEALED BY

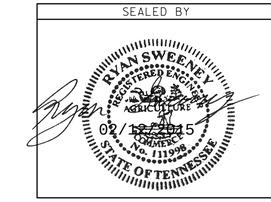

COORDINATES ARE NAD/83(1995), ARE DATUM ADJUSTED BY THE FACTOR OF 1.00006 AND TIED TO THE TGRN. ALL ELEVATIONS ARE REFERENCED TO THE NAVD 1988.

STATE OF TENNESSEE

DEPARTMENT OF TRANSPORTATION

RETAINING WALL CONCEPTUAL DRAWING

WALL NO. 5

SCALE: 1"=50' HORIZ.
1"=5' VERT.

02/12/2015 4:42:19 PM
Q:\280715\1\002T.sht