CONST. NO. 19005-3161-44		
PROJECT NO.	YEAR	SHEET NO.
BH-I-40-4(86)	2015	

REVISIONS

NO.	DATE	BY	BRIEF DESCRIPTION

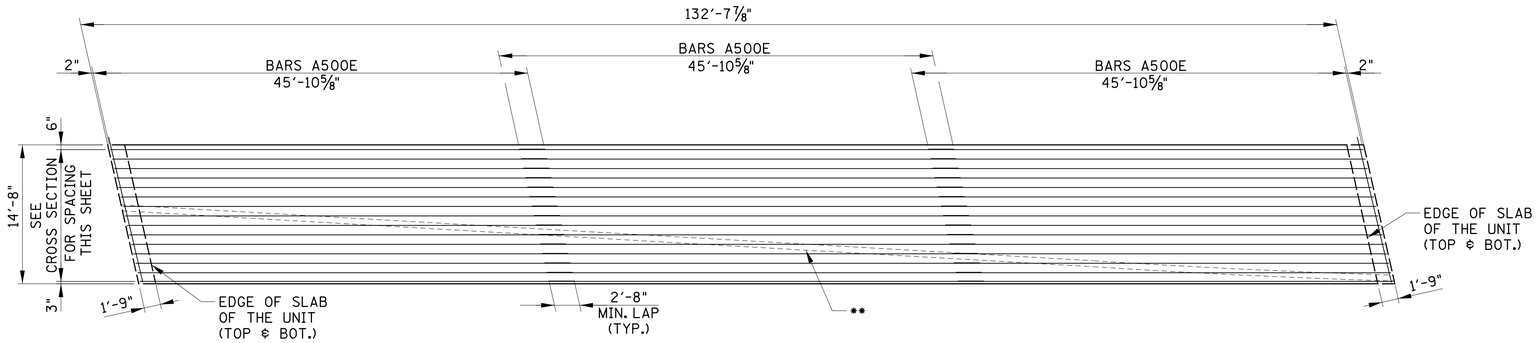

UNIT "E" SLAB PLAN - TOP MAT

** NOTE: SLAB TO INCLUDE BARS B570E @ 8" FOR VARYING BRIDGE RAIL. SEE STD-1-1SS FOR REINFORCING DETAILS.

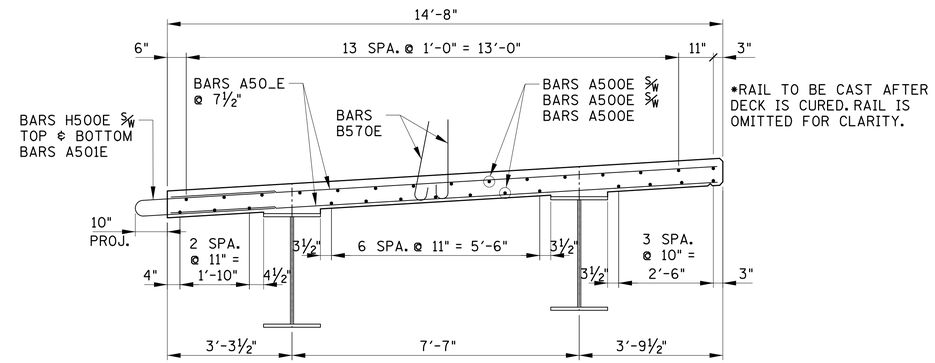

SLAB SECTION "E"

NOTE: VERTICAL FACE OF SUPERSTRUCTURE UNITS SHALL BE ROUGHENED AT TIME OF CASTING BY

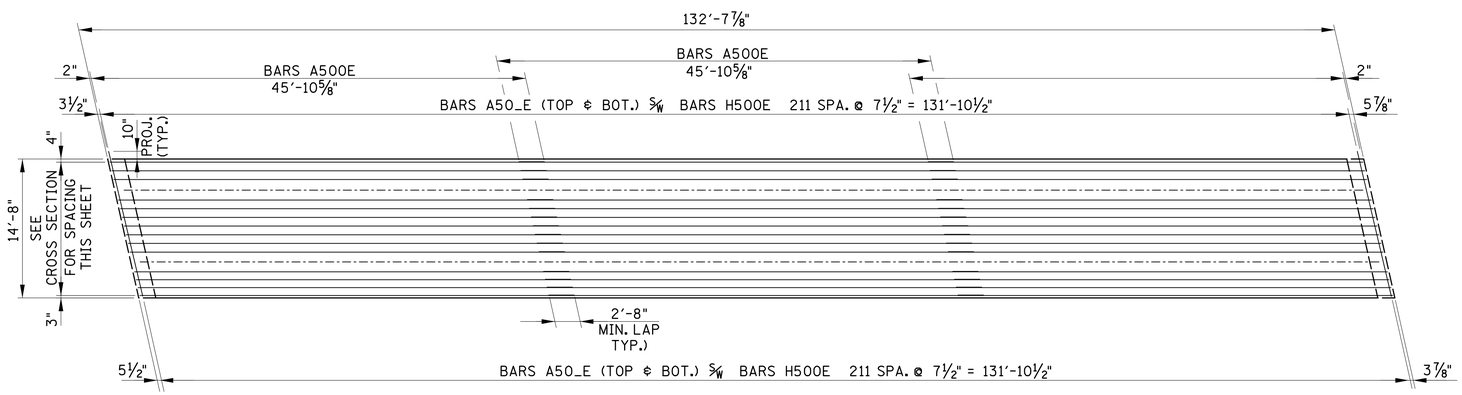

UNIT "E" SLAB PLAN - BOTTOM MAT

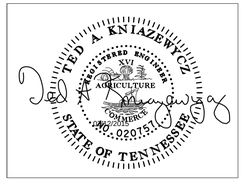

BRIDGE NO. 5
STATE OF TENNESSEE
DEPARTMENT OF TRANSPORTATION
SUPERSTRUCTURE DETAILS
SLAB UNIT LAYOUT
I-40
OVER
CHARLOTTE AVE.
BR. NO. 19-I0040-17.09
DAVIDSON COUNTY
2015

BR-119-191

DESIGNED BY GRESHAM SMITH & PARTNERS DATE 2/09/2015
DRAWN BY C.YOUNG DATE 1/2015
SUPERVISED BY T. KNIAZEWYCZ DATE 1/2015
CHECKED BY T. KNIAZEWYCZ DATE 2/2015

GRESHAM SMITH AND PARTNERS

knlazet
Q:\2807115\b\Bridge D Charlotte\Bridge 1\8071b15dbls7.sht
2/12/2015
PRF