CONST. NO.	19005-3161-44	
PROJECT NO.	YEAR	SHEET NO.
BH-I-40-4(86)	2015	

REVISIONS

NO.	DATE	BY	BRIEF DESCRIPTION

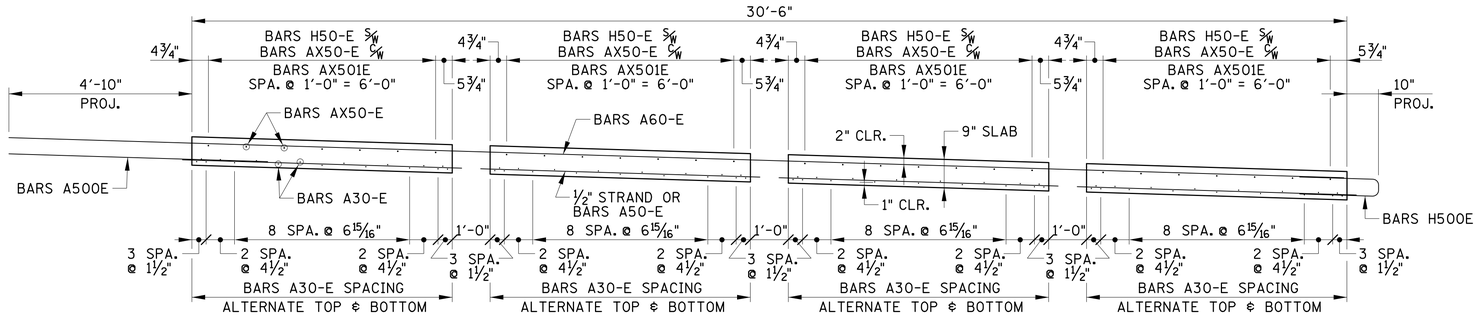

PANEL SECTION

(ONE (1) PANEL REQUIRED)

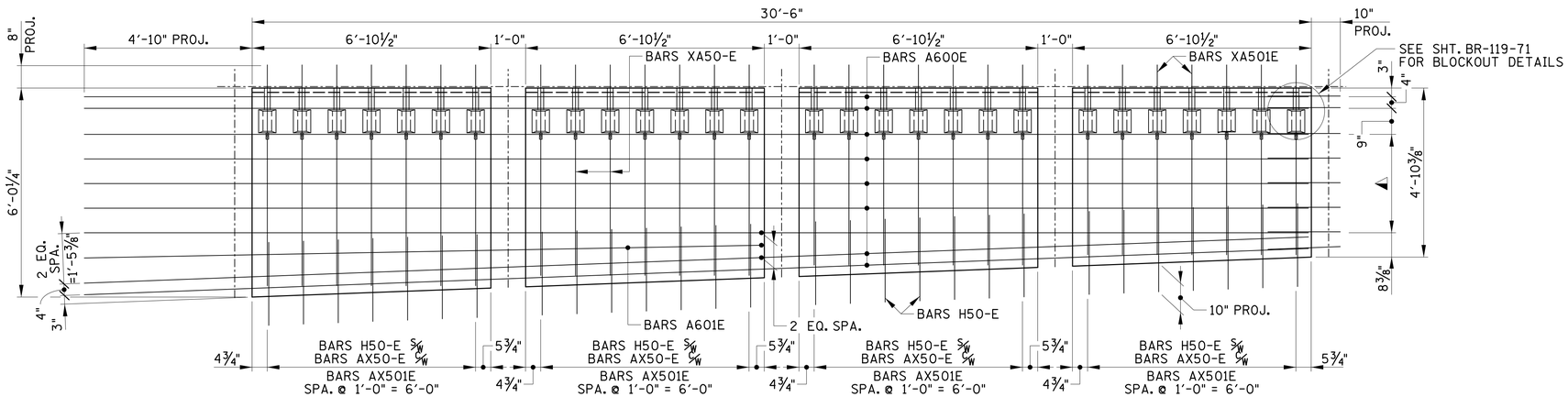

PANEL (TOP MAT)

◭ DENOTES: BARS H500E & BARS A600E SPA. @ 8½" = 2'-10". PLACE BARS H500 ON LEFT SIDE OF A600 BARS (1'-3" EMBED., 10" PROJECT.)

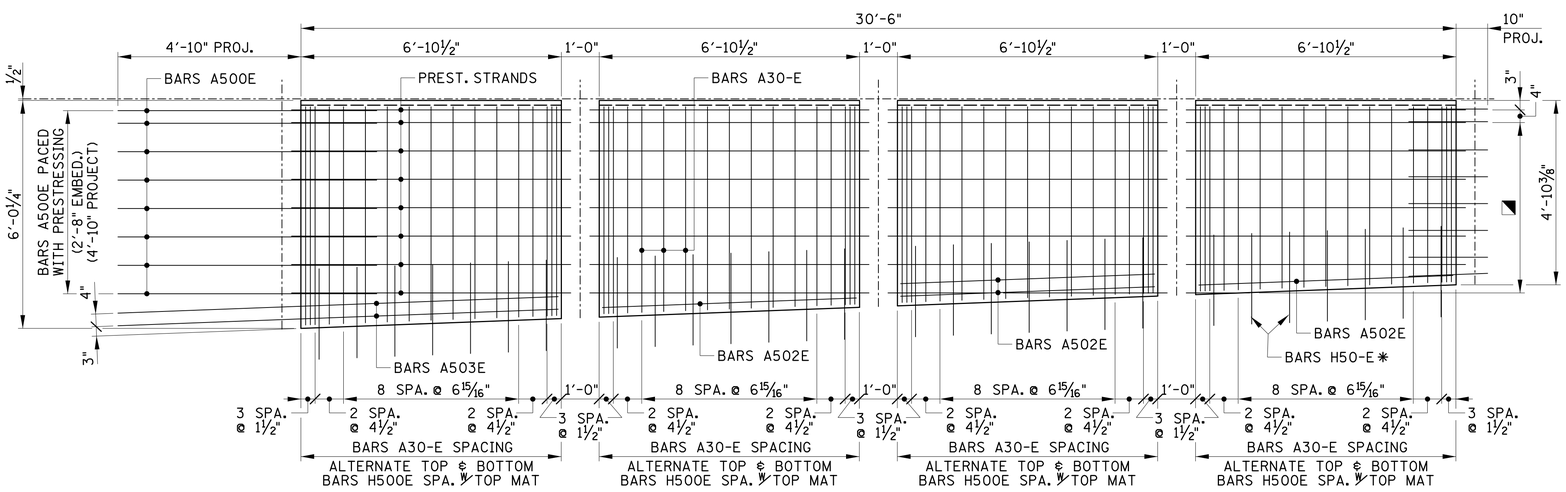

✱ DENOTES: BARS H50-E SPACING WITH TOP MAT (EMBED.VARIES, 10" PROJECT.)

PANEL (BOTTOM MAT)

◪ DENOTES: ½" ø PRESTRESSING STRANDS, 9" = 4'-6" BARS H500E SPACING WITH TOP MAT (1'-3" EMBED., 10" PROJECT.)

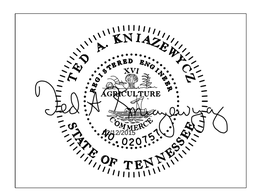

BRIDGE NO. 2

STATE OF TENNESSEE
DEPARTMENT OF TRANSPORTATION

PANEL A-1 DETAILS

I-40
OVER
CSX RAILROAD
BR. NO. 19-I0040-16.75
DAVIDSON COUNTY
2015

DESIGNED BY	GRESHAM SMITH & PARTNERS	DATE	2/09/2015
DRAWN BY	R. PALMER	DATE	1/2015
SUPERVISED BY	T. KNIAZEWYCZ	DATE	1/2015
CHECKED BY	T. KNIAZEWYCZ	DATE	2/2015

GRESHAM SMITH AND PARTNERS

BR-119-55

kniazet
Q:\2807115\b\Bridge B Clinton\bridge 1\8071b15b1s4.sht
2/12/2015
PRF