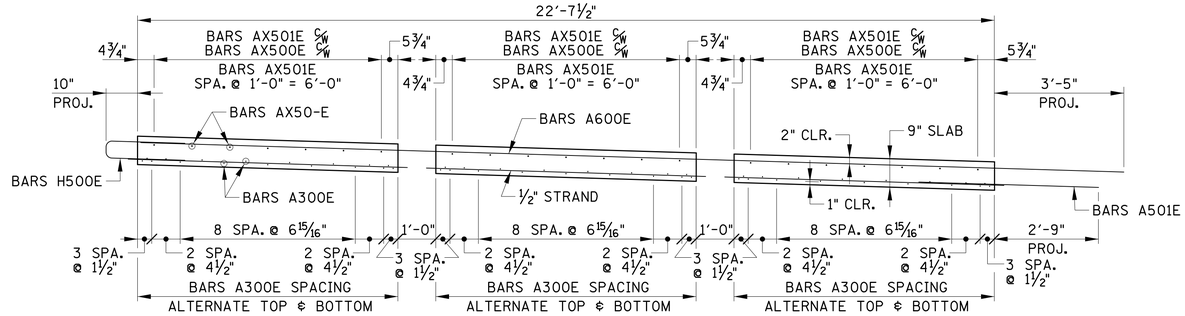

PANEL SECTION

(4 PANELS REQUIRED)

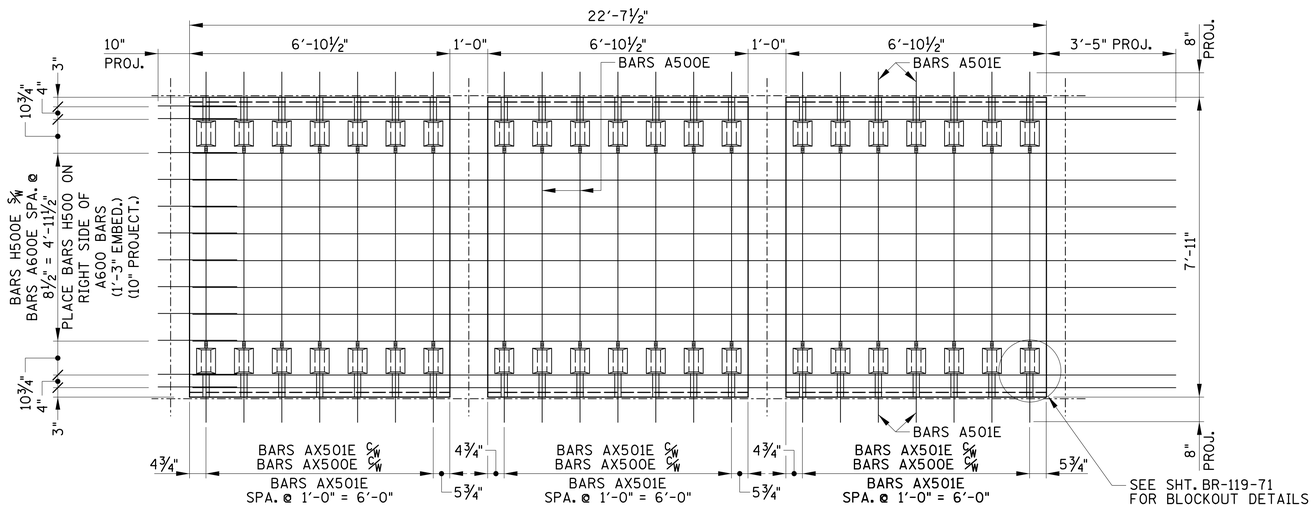

PANEL (TOP MAT)

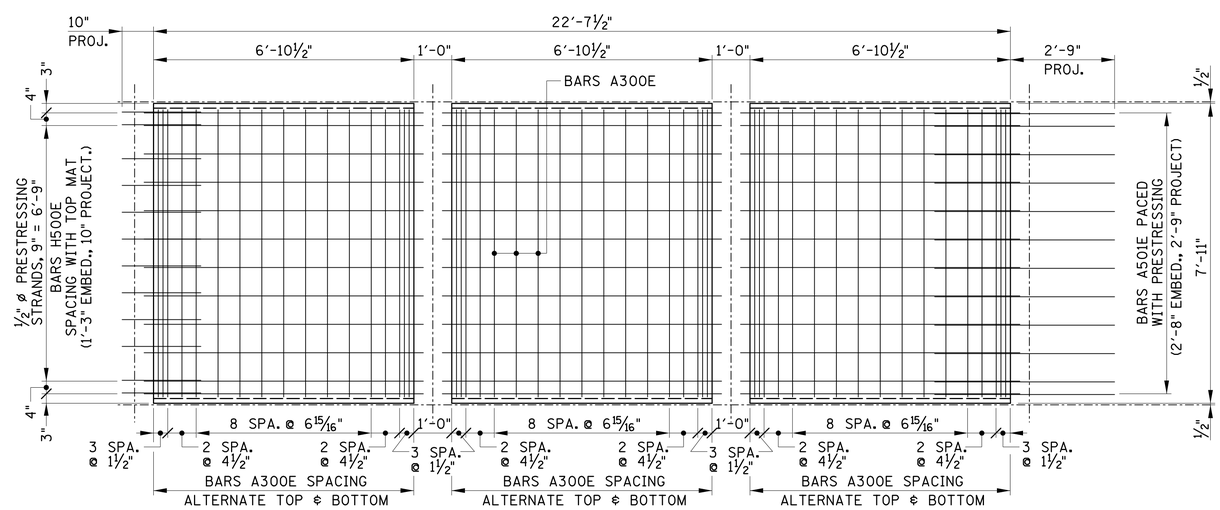

PANEL (BOTTOM MAT)

CONST. NO.	19005-3161-44	
PROJECT NO.	YEAR	SHEET NO.
BH-I-40-4(86)	2015	

REVISIONS

NO.	DATE	BY	BRIEF DESCRIPTION

BRIDGE NO. 2

STATE OF TENNESSEE
DEPARTMENT OF TRANSPORTATION

PANEL C-2 DETAILS

I-40
OVER
CSX RAILROAD
BR. NO. 19-10040-16.75
DAVIDSON COUNTY
2015

BR-119-64

DESIGNED BY GRESHAM SMITH & PARTNERS DATE 2/09/2015
DRAWN BY R. PALMER DATE 1/2015
SUPERVISED BY T. KNIAZEWYCZ DATE 1/2015
CHECKED BY T. KNIAZEWYCZ DATE 2/2015

GRESHAM SMITH AND PARTNERS

kniazet
Q:\2807115\b\Bridge B Clinton\bridge 1\807tb15b1s13.sht
2/12/2015
PRF