TYPE	YEAR	PROJECT NO.	SHEET NO.
CONST.	2015	BH-I-40-4(86)	43C

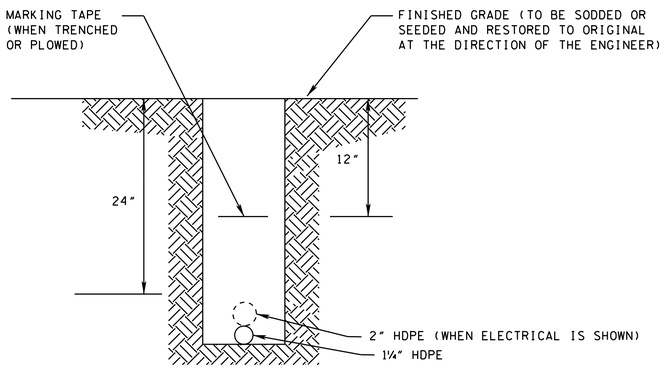

CONDUIT BANK TYPE 1

N.T.S.

ONE 1¼" HDPE COMMUNICATIONS CONDUIT WITH
OR WITHOUT ONE 2" HDPE ELECTRICAL CONDUIT
WHICH IS PAID SEPARATELY

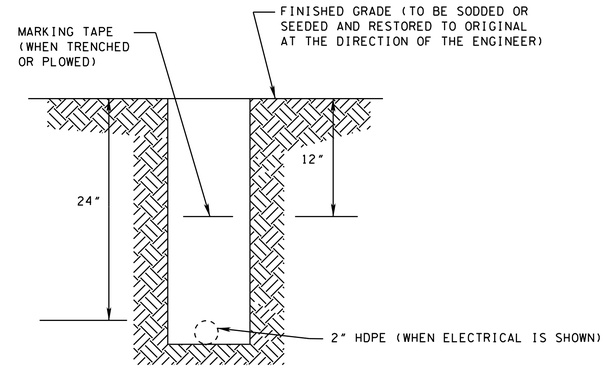

1-2" CONDUIT

N.T.S.

ONE 2" HDPE ELECTRICAL CONDUIT

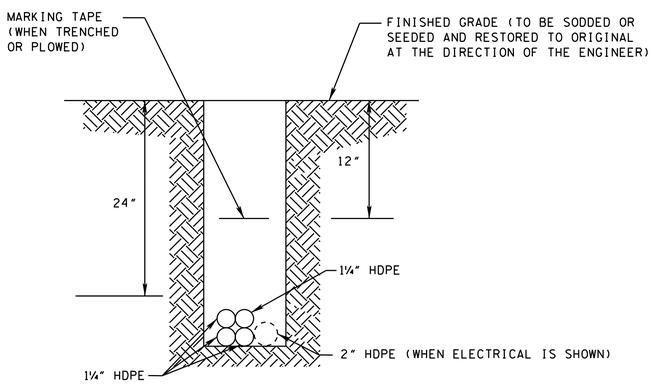

CONDUIT BANK TYPE 4

N.T.S.

FOUR 1¼" HDPE COMMUNICATIONS CONDUITS WITH
OR WITHOUT ONE 2" HDPE ELECTRICAL CONDUIT
WHICH IS PAID SEPARATELY

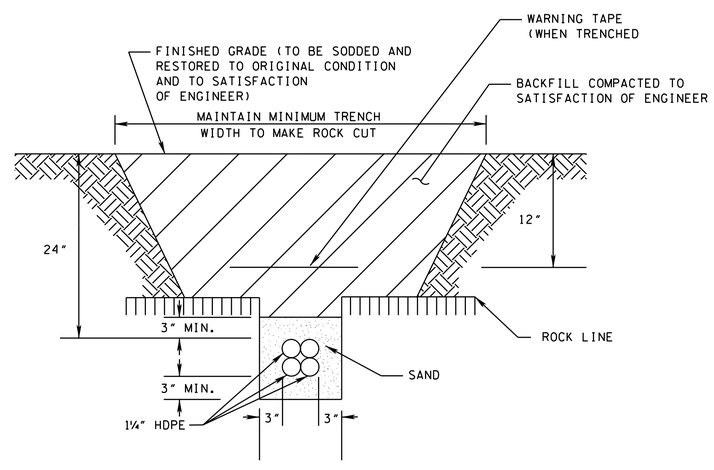

CONDUIT BANK IN ROCK

N.T.S.

CONDUIT COLORS

ALL CONDUIT USED ON THIS PROJECT SHALL CONFORM
TO THE COLOR SCHEME AND USE DESCRIBED BELOW:

CONDUIT BANK TYPE 1: GREEN (DROP FIBER OR RDS COMM)

CONDUIT BANK TYPE 4: ORANGE (TRUNK FIBER CABLE)
BLUE (RDS COMM OR DROP FIBER)
WHITE (SPARE OR 2ND RDS COMM)
BROWN (SPARE)

2" ELECTRICAL CONDUIT: GREY (ELECTRICAL WIRE)

NOTES:

1. ROCK LINE WILL VARY. ROCK EXCAVATION TO BE INCLUDED IN CONDUIT BANK.
2. WHERE ROCK IS FOUND TRENCH MUST CONTAIN MINUMUM 3" SAND COVER OVER CONDUIT THEN 9" BACK FILL WITH SOIL FREE OF ROCKS OR OTHER FOREIGN MATTER. THE REMAINDER OF THE TRENCH MAY BE BACK-FILLED WITH EXISTING MATERIAL REMOVED FROM THE TRENCH PROVIDED NO STONES ARE GREATER THAN #2 STONE.
3. DETAILS FOR CONDUIT BANKS APPEAR AS TRENCHED INSTALLATION FOR GRAPHICAL PURPOSES ONLY.
4. THERE IS NOT A SEPARATE ITEM # FOR CONDIT IN ROCK. COST OF CONDUIT IN ROCK SHALL BE INCLUDED IN COST OF INSTALLING CONDUIT TYPE.
5. MARKING TAPE AND TRACE WIRE IS INCLUDED IN COST OF CONDUIT.

SEALED BY

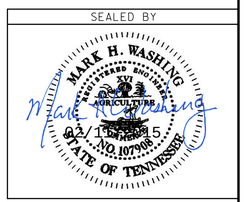

STATE OF TENNESSEE
DEPARTMENT OF TRANSPORTATION

TRENCHING DETAILS

N.T.S.

2/10/2015 10:57:52 PM
Q:\2807115\TITS\Trenching.sht