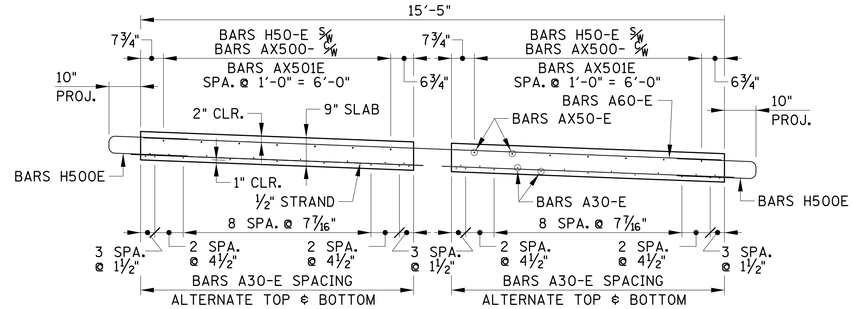

PANEL SECTION

(ONE (1) PANEL REQUIRED)

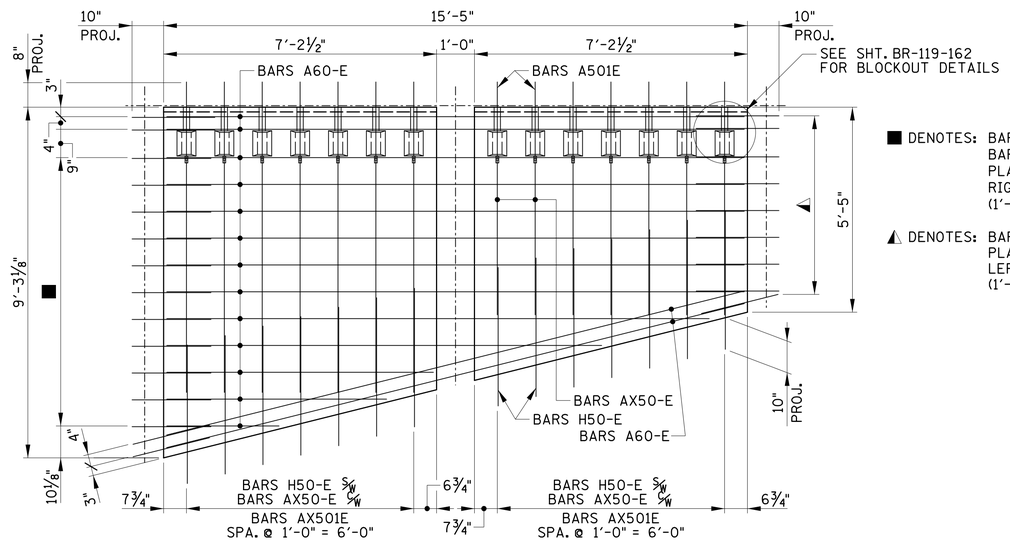

■ DENOTES: BARS A60-E SPA. @ 8½" = 7'-1"
BARS H500E ⅝W BARS A60-E,
PLACE BARS H500E ON
RIGHT SIDE OF A60-E BARS
(1'-3" EMBED., 10" PROJECT.)

◭ DENOTES: BARS H500E ⅝W BARS A60-E,
PLACE BARS H500E ON
LEFT SIDE OF A60-E BARS
(1'-3" EMBED., 10" PROJECT.)

PANEL (TOP MAT)

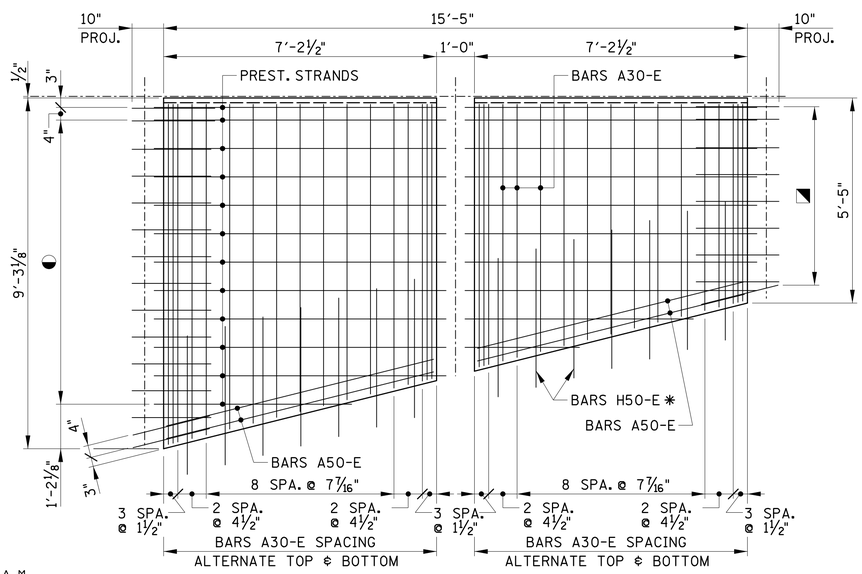

◑ DENOTES: ½" ø PRESTRESSING STRANDS
SPA. @ 9" = 7'-6", BARS H500E
SPACING WITH TOP MAT
(1'-3" EMBED., 10" PROJECT.)

✱ DENOTES: BARS H50-E SPACING WITH TOP MAT
(EMBED.VARIES, 10" PROJECT.)

◪ DENOTES: BARS H500E SPACING WITH TOP MAT
(1'-3" EMBED., 10" PROJECT.)

PANEL (BOTTOM MAT)

CONST. NO.	19005-3161-44	
PROJECT NO.	YEAR	SHEET NO.
BH-I-40-4(86)	2015	

REVISIONS

NO.	DATE	BY	BRIEF DESCRIPTION

BRIDGE NO. 4

STATE OF TENNESSEE
DEPARTMENT OF TRANSPORTATION

PANEL A-6 DETAILS

I-40
OVER
JO JOHNSTON AVE.
BR. NO. 19-I0040-16.88
DAVIDSON COUNTY
2015

BR-119-142

DESIGNED BY GRESHAM SMITH & PARTNERS DATE 2/09/2015
DRAWN BY R. PALMER DATE 1/2015
SUPERVISED BY T. KNIAZEWYCZ DATE 1/2015
CHECKED BY T. KNIAZEWYCZ DATE 2/2015

GS&P GRESHAM SMITH AND PARTNERS

knizet
Q:\2807115\b\Bridge C Jo Johnston\bridge 1\8071b15cb1s7.sht
2/13/2015
PRF