CONST. NO.	19005-3161-44	
PROJECT NO.	YEAR	SHEET NO.
BH-I-40-4(86)	2015	

REVISIONS

NO.	DATE	BY	BRIEF DESCRIPTION

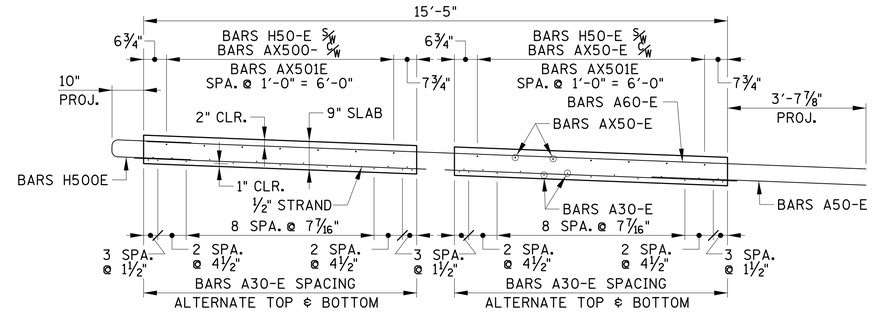

PANEL SECTION

(ONE (1) PANEL REQUIRED)

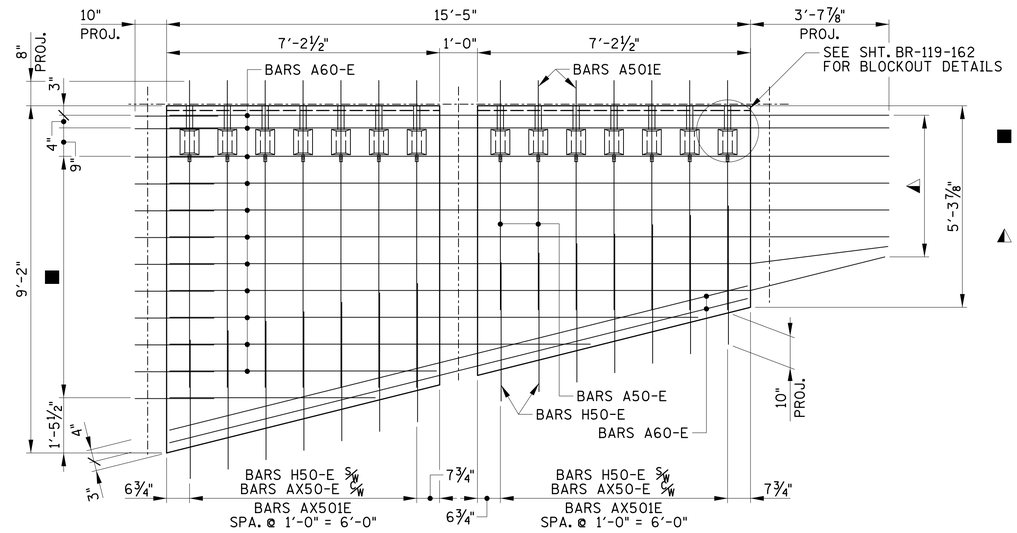

PANEL (TOP MAT)

■ DENOTES: BARS A60-E SPA. @ 8½" = 6'-4½"
BARS H500E BARS A60-E,
PLACE BARS H500E ON
RIGHT SIDE OF A60-E BARS
(1'-3" EMBED., 10" PROJECT.)

◭ DENOTES: BARS A60-E TO BE FIELD
BEND AS NECESSARY
(3'-7⅞" PROJECT.)

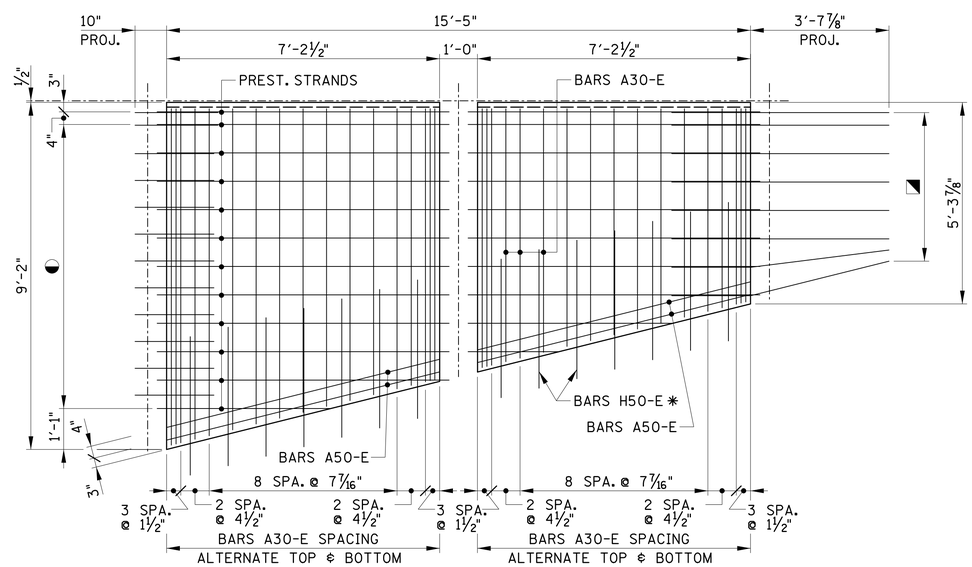

PANEL (BOTTOM MAT)

◑ DENOTES: ½" ø PRESTRESSING STRANDS
SPA. @ 9" = 7'-6", BARS H500E
SPACING WITH TOP MAT
(1'-3" EMBED., 10" PROJECT.)

✳ DENOTES: BARS H50-E SPACING WITH TOP MAT
(EMBED.VARIES, 10" PROJECT.)

◪ DENOTES: BARS A50-E
PRESTRESSING STRANDS
(2'-8" EMBED., 3'-7⅞" PROJECT.)

BRIDGE NO. 4

STATE OF TENNESSEE
DEPARTMENT OF TRANSPORTATION

PANEL A-7 DETAILS

I-40
OVER
JO JOHNSTON AVE.
BR. NO. 19-I0040-16.88
DAVIDSON COUNTY
2015

TED A. KNIAZEWYCZ
REGISTERED ENGINEER
AGRICULTURE COMMERCE
NO. 102075
STATE OF TENNESSEE

DESIGNED BY	GRESHAM SMITH & PARTNERS	DATE	2/09/2015
DRAWN BY	R. PALMER	DATE	1/2015
SUPERVISED BY	T. KNIAZEWYCZ	DATE	1/2015
CHECKED BY	T. KNIAZEWYCZ	DATE	2/2015

GRESHAM SMITH AND PARTNERS

knlazet
Q:\2807115\b\Bridge C Jo Johnston\bridge 1\8071b15cb1s7a.sht
2/13/2015
PRF

BR-119-143