TYPE	YEAR	PROJECT NO.	SHEET NO.
CONST.	2015	BH-I-40-4(86)	67

FILE NO.

TENNESSEE D.O.T.
DESIGN DIVISION

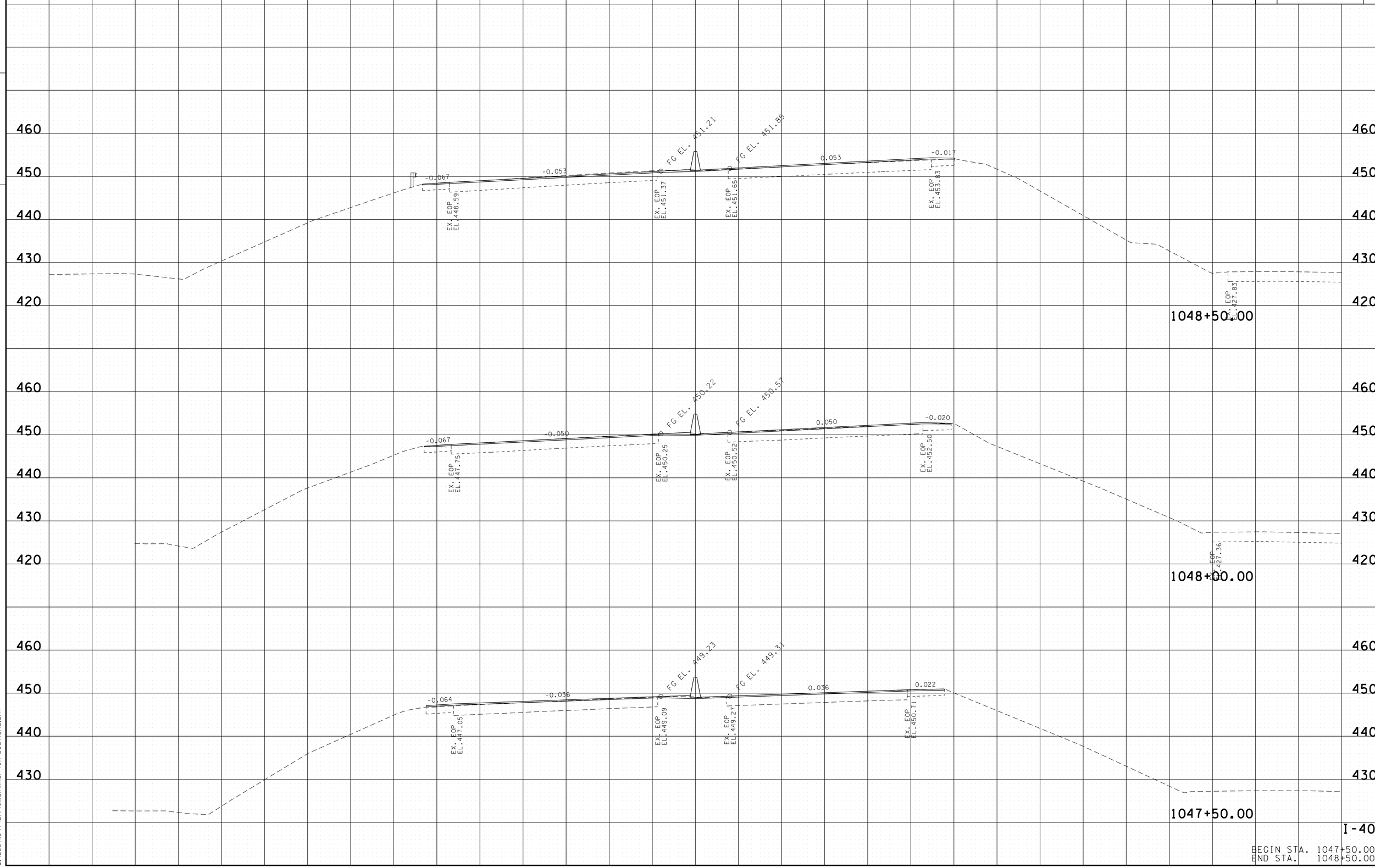

I-40

BEGIN STA. 1047+50.00
END STA. 1048+50.00

2/13/2015 7:13:19 AM
Q:\2807115\T\DA40MainLine1-40X-Sections.sht