CONST. NO. 19005-3161-44

PROJECT NO.	YEAR	SHEET NO.
BH-I-40-4(86)	2015	

REVISIONS

NO.	DATE	BY	BRIEF DESCRIPTION

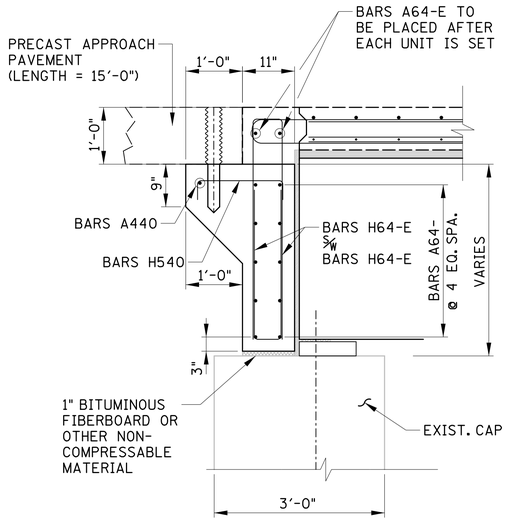

SECTION B-B

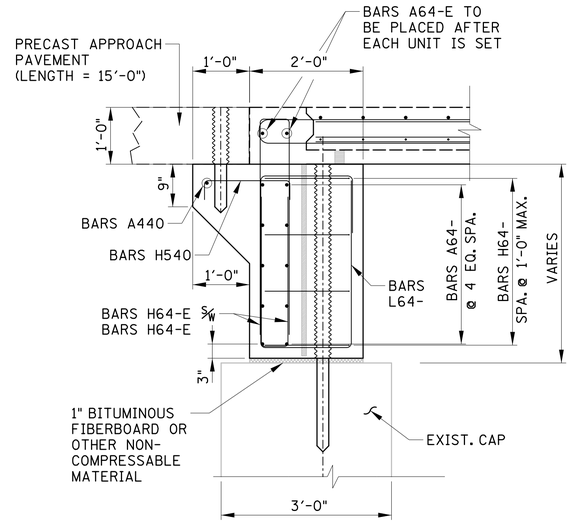

SECTION C-C

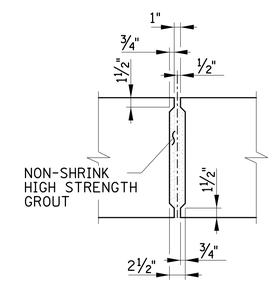

JOINT DETAIL

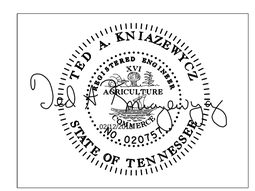

BRIDGE NO. 3

STATE OF TENNESSEE
DEPARTMENT OF TRANSPORTATION

ABUTMENT NOS. 1 & 2
PRECAST ENDWALL DETAILS
I-40
OVER
CLINTON STREET
BR. NO. 19-I0040-16.75
DAVIDSON COUNTY
2015

BR-119-120

DESIGNED BY GRESHAM SMITH & PARTNERS DATE 2/09/2015
DRAWN BY R. PALMER DATE 1/2015
SUPERVISED BY T. KNIAZEWYCZ DATE 1/2015
CHECKED BY T. KNIAZEWYCZ DATE 2/2015

GRESHAM SMITH AND PARTNERS

knizet
Q:\2807115\b\Bridge B Clinton\bridge 2\807115b2b3.sht
2/13/2015
PRF