CONST. NO.	19005-3161-44	
PROJECT NO.	YEAR	SHEET NO.
BH-I-40-4(86)	2015	

REVISIONS

NO.	DATE	BY	BRIEF DESCRIPTION

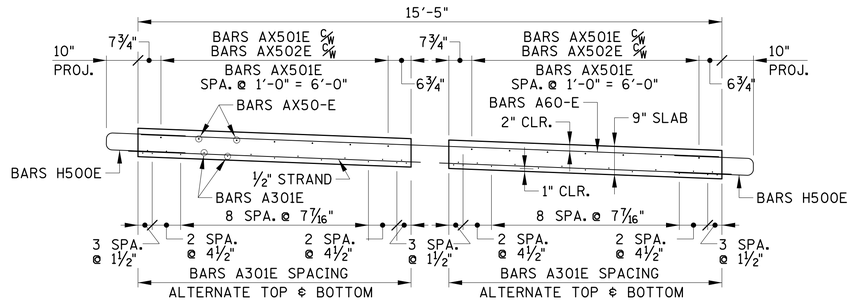

PANEL E1 SECTION

(ONE (1) PANEL REQUIRED)

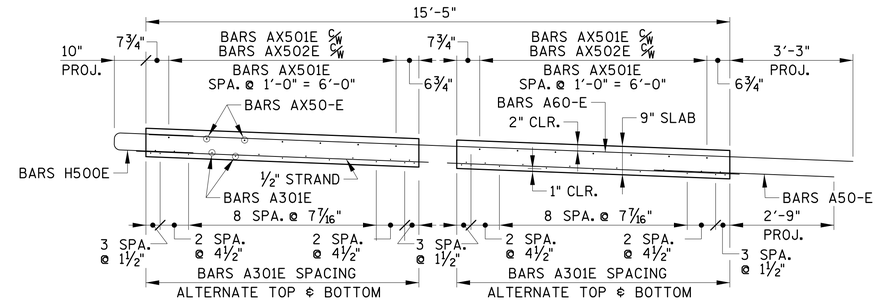

PANEL E2 SECTION

(ONE (1) PANEL REQUIRED)

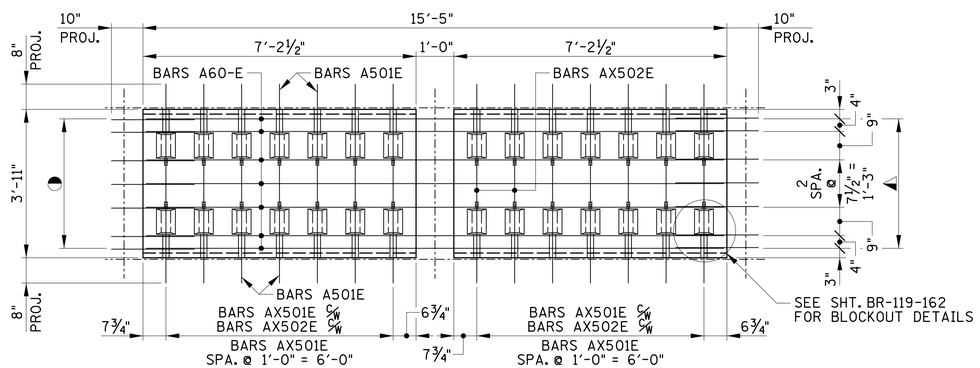

PANEL E1 (TOP MAT)

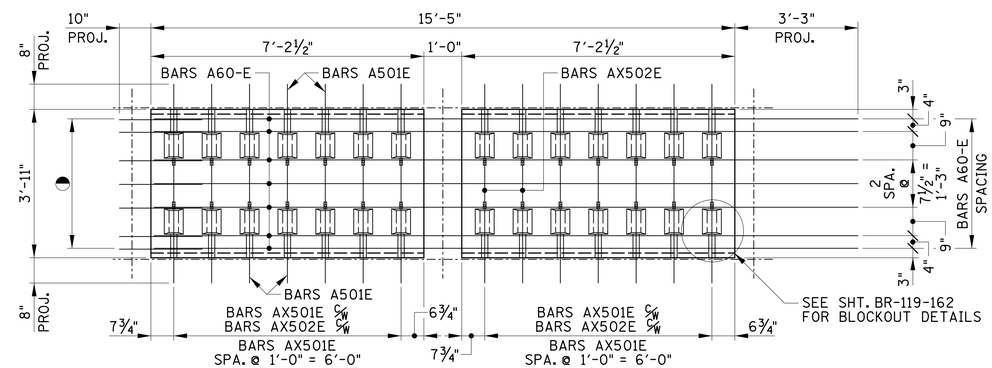

PANEL E2 (TOP MAT)

◑ DENOTES: BARS H500E ⚟ BARS A60-E, PLACE BARS H500E ON RIGHT SIDE OF A60-E BARS (1'-3" EMBED., 10" PROJECT.)

◭ DENOTES: BARS H500E ⚟ BARS A60-E, PLACE BARS H500E ON LEFT SIDE OF A60-E BARS (1'-3" EMBED., 10" PROJECT.)

◑ DENOTES: BARS H500E ⚟ BARS A60-E, PLACE BARS H500E ON RIGHT SIDE OF A60-E BARS (1'-3" EMBED., 10" PROJECT.)

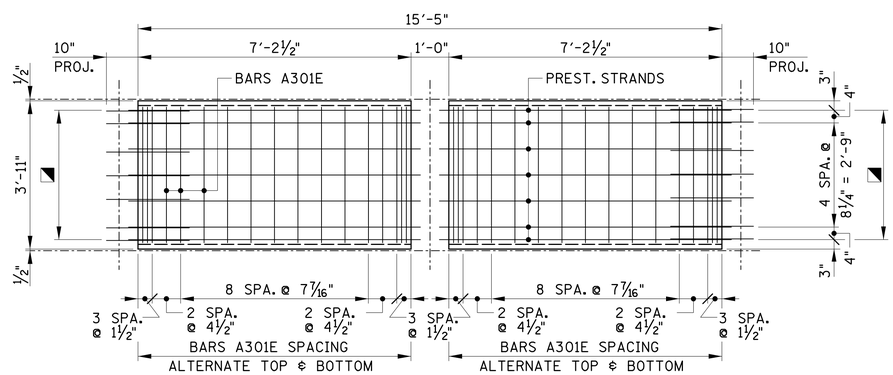

PANEL E1 (BOTTOM MAT)

◪ DENOTES: ½" ø PRESTRESSING STRANDS SPACING BARS H500E SPACED WITH TOP MAT (1'-3" EMBED., 10" PROJECT.)

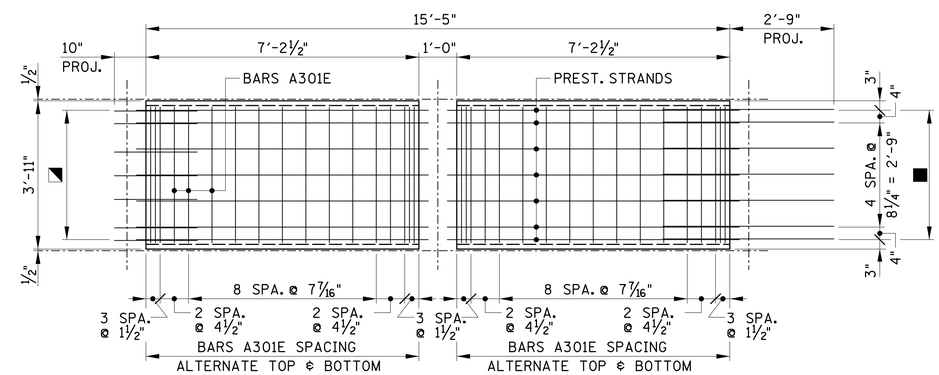

PANEL E2 (BOTTOM MAT)

◪ DENOTES: ½" ø PRESTRESSING STRANDS SPACING BARS H500E SPACED WITH TOP MAT (1'-3" EMBED., 10" PROJECT.)

■ DENOTES: ½" ø PRESTRESSING STRANDS SPACING, BARS A501E ⚟ PRESTRESSING STRANDS (2'-8" EMBED., 2'-9" PROJECT.)

BRIDGE NO. 4

STATE OF TENNESSEE
DEPARTMENT OF TRANSPORTATION

PANELS E-1 & E-2 DETAILS

I-40
OVER
JO JOHNSTON AVE.
BR. NO. 19-I0040-16.88
DAVIDSON COUNTY
2015

DESIGNED BY	GRESHAM SMITH & PARTNERS	DATE	2/09/2015
DRAWN BY	R. PALMER	DATE	1/2015
SUPERVISED BY	T. KNIAZEWYCZ	DATE	1/2015
CHECKED BY	T. KNIAZEWYCZ	DATE	2/2015

GRESHAM SMITH AND PARTNERS

BR-119-154

knizzet
Q:\2807115\b\Bridge C Jo Johnston\bridge 1\807115cb1s16b.sht
2/13/2015
PRF