CONST. NO. 19005-3161-44

PROJECT NO.	YEAR	SHEET NO.
BH-I-40-4(86)	2015	

REVISIONS

NO.	DATE	BY	BRIEF DESCRIPTION

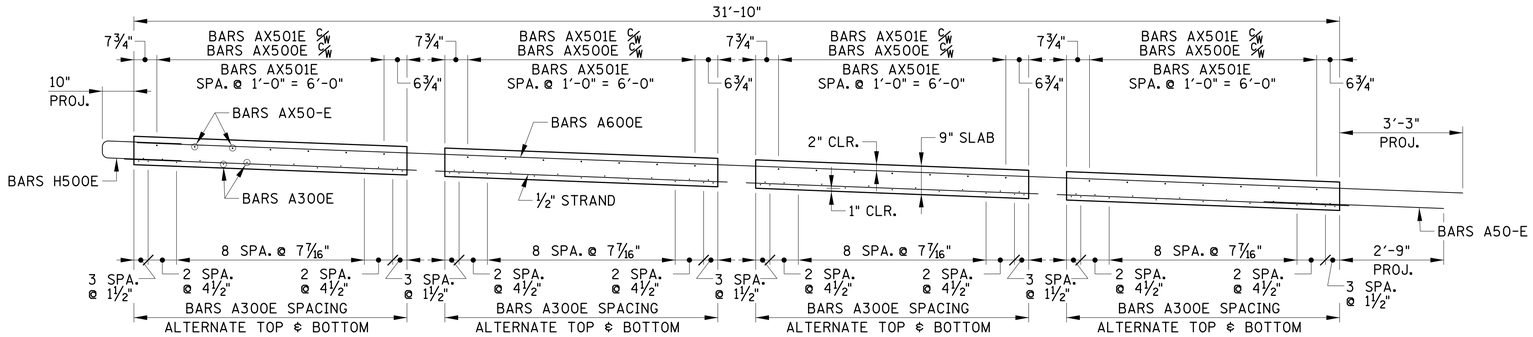

PANEL SECTION

(4 PANELS REQUIRED)

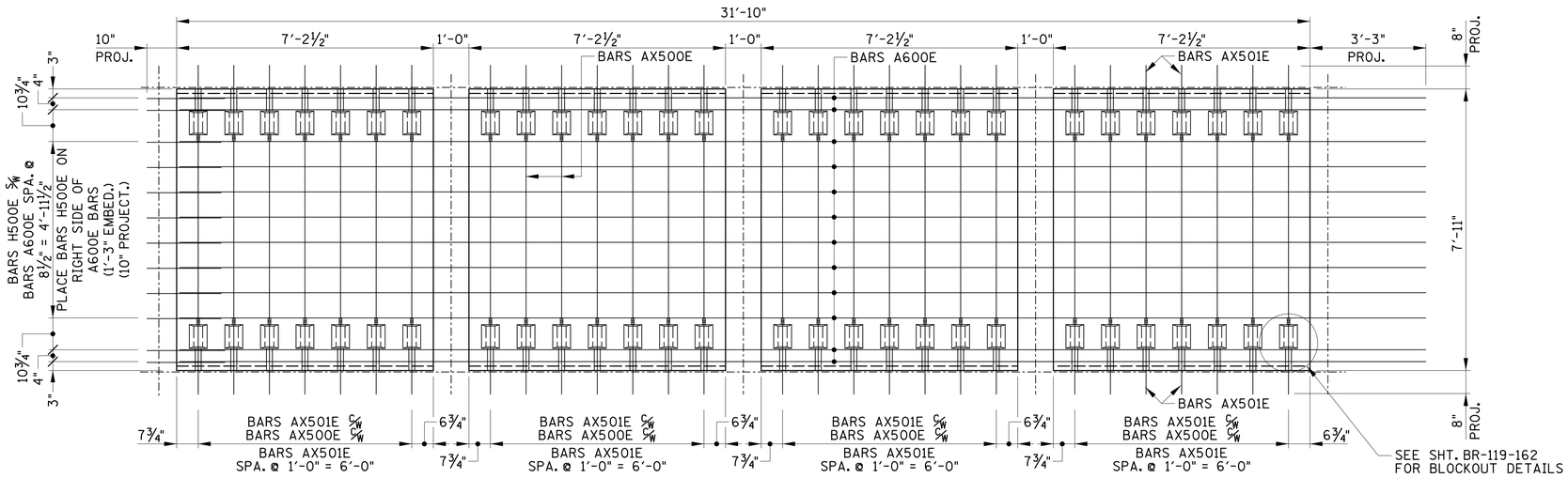

PANEL (TOP MAT)

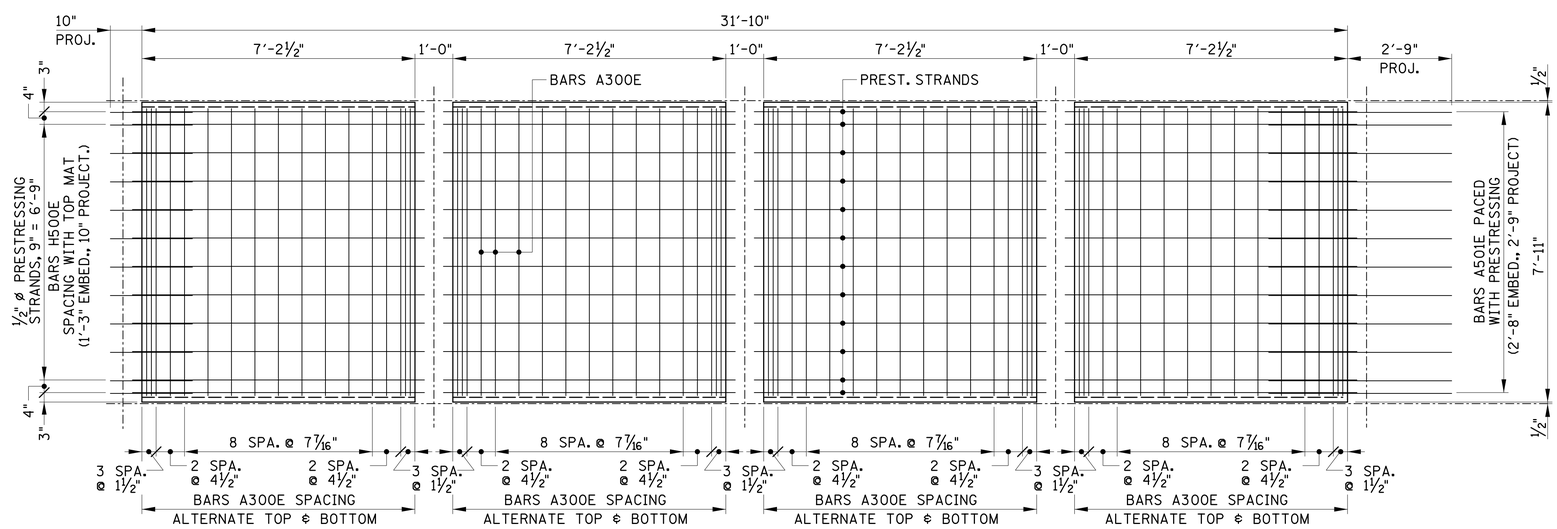

PANEL (BOTTOM MAT)

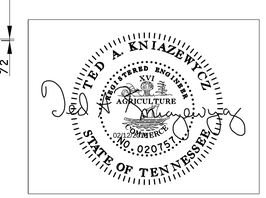

BRIDGE NO. 4

STATE OF TENNESSEE
DEPARTMENT OF TRANSPORTATION

PANEL C-2 DETAILS

I-40
OVER
JO JOHNSTON AVE.
BR. NO. 19-I0040-16.88
DAVIDSON COUNTY
2015

DESIGNED BY	GRESHAM SMITH & PARTNERS	DATE	2/09/2015
DRAWN BY	R. PALMER	DATE	1/2015
SUPERVISED BY	T. KNIAZEWYCZ	DATE	1/2015
CHECKED BY	T. KNIAZEWYCZ	DATE	2/2015

GRESHAM SMITH AND PARTNERS

kniazet
Q:\2807115\b\Bridge C Jo Johnston\bridge 1\8071b15cb1s9.sht
2/13/2015
PRF

BR-119-145