TYPE	YEAR	PROJECT NO.	SHEET NO.
CONST.	2015	BH-I-40-4(86)	2P

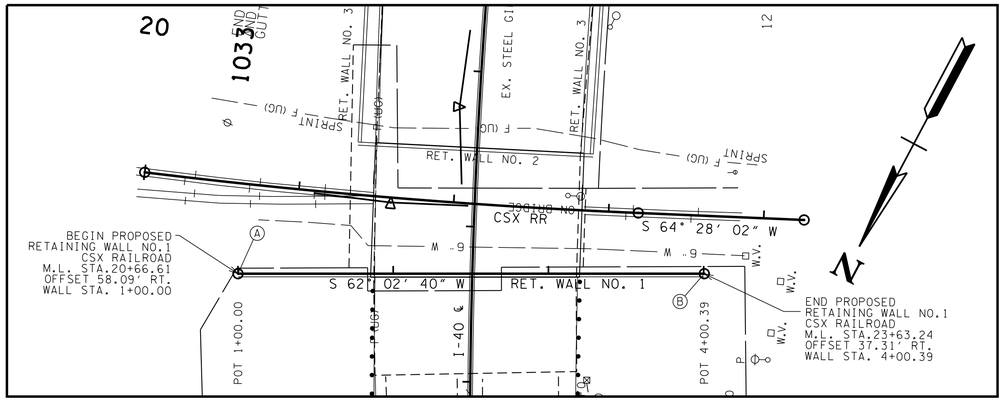

PLAN VIEW OF RETAINING WALL NO.1

ESTIMATED QUANTITIES FOR RETAINING WALL

ITEM NO.	604-07.01
DESCRIPTION	RETAINING WALL NO.1 S.F.
QUANTITY	6,708 S.F.

NOTE : THE RETAINING WALL PAY QUANTITY IS BASED ON THE SURFACE AREA OF CONCRETE FROM THE APPROXIMATE TOP OF WALL TO A MINIMUM OF 2′ BELOW THE EXISTING/PROPOSED GROUND LINE.

** PRELIMINARY DESIGN FOR UNIAXIAL GEOGRID BASED ON THE FOLLOWING MATERIALS TYPES FROM BOTTOM FOR 30′ DESIGN HEIGHT:
5 LAYERS TENSAR UX1400MSE (3500 SY)
7 LAYERS TENSAR UX1500MSE (4250 SY)
10 LAYERS TENSAR UX1600MSE (6000 SY)

ALTERNATE DESIGN AND MATERIALS MAY BE CONSIDERED BY THE ENGINEER.

THE RETAINING WALL PAY QUANTITY INCLUDES 18′ REINFORCED SELECT BACKFILL ZONE WITH UNIAXIAL GEOGRID** SPACED AT 18″ INTERVALS USED IN ALL FILL LOCATIONS. ALSO INCLUDES REMOVAL OF EXISTING 1′ OF TOPSOIL AND TEXTURE COATING (650 SY).

UNDERCUTTING AND BACKFILLING GRANULAR MATERIAL, FILL OUTSIDE OF THE REINFORCED ZONE AND TEMPORARY SHORING REQUIRED FOR CONSTRUCTION OF THE WALL ARE PAID IN SEPARATE PAY ITEMS.

WALL NO.1 LOCATION STAKE- OUT POINTS

RET. WALL BASELINE STATION	CSX CENTERLINE STATION	N	E	CSX CENTERLINE REFERENCE	TOP RET. WALL ELEVATION	BOTTOM RET. WALL ELEVATION
1+00.00	20+66.61	668,112.4733	1,734,160.5066	58.09′ RT.	433.00	429.95
1+82.71	21+47.85	668,073.7001	1,734,087.4479	50.22′ RT.	470.00	433.95
1+85.41	21+50.50	668,072.4344	1,734,085.0629	49.99′ RT.	470.20	433.95
3+20.00	22+83.28	668,009.3405	1,733,966.1780	40.87′ RT.	466.25	435.95
3+22.39	22+85.64	668,008.2201	1,733,964.0668	40.74′ RT.	466.00	435.95
4+00.39	23+63.24	667,971.6534	1,733,895.1657	37.31′ RT.	440.00	437.95

PROPOSED WALL NO.1 ALIGNMENT

WALL STA.	CODE	LOCATION	M.L. STA.	N	E	M.L. OFFSET	FROM -TO	BEARING/RADIUS	LENGTH
1+00.00	Ⓐ	CSX	20+66.61	668,112.4733	1,734,160.5066	58.09′ RT.	Ⓐ - Ⓑ	S 62°02′40″ W	300.39′
4+00.39	Ⓑ	CSX	23+63.24	667,971.6534	1,733,895.1657	37.31′ RT.			

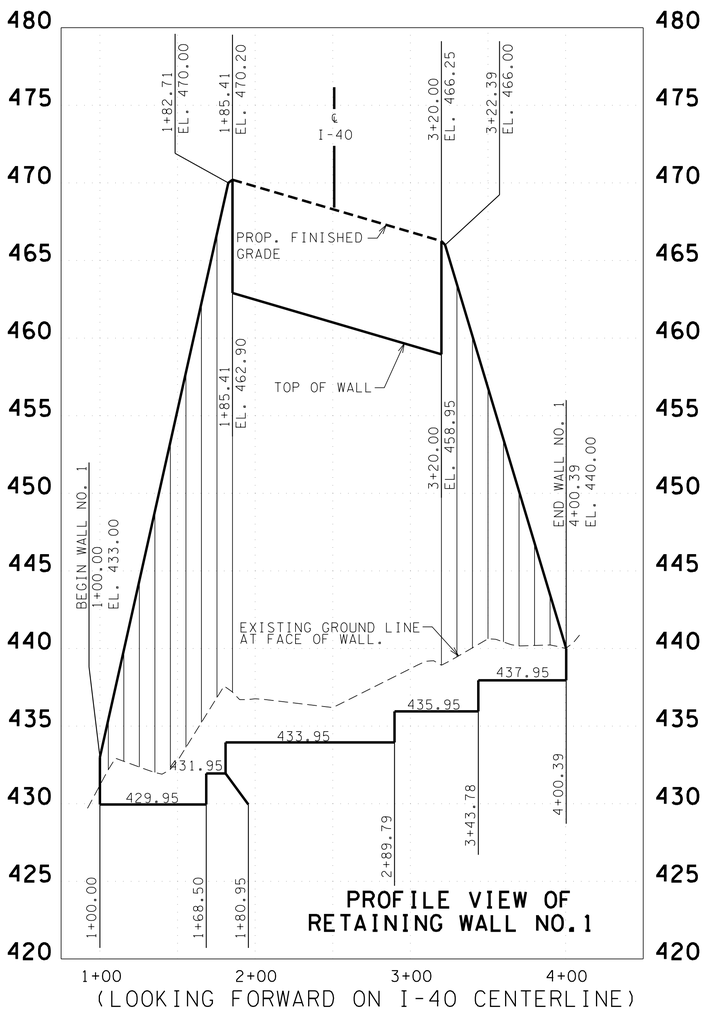

PROFILE VIEW OF RETAINING WALL NO.1

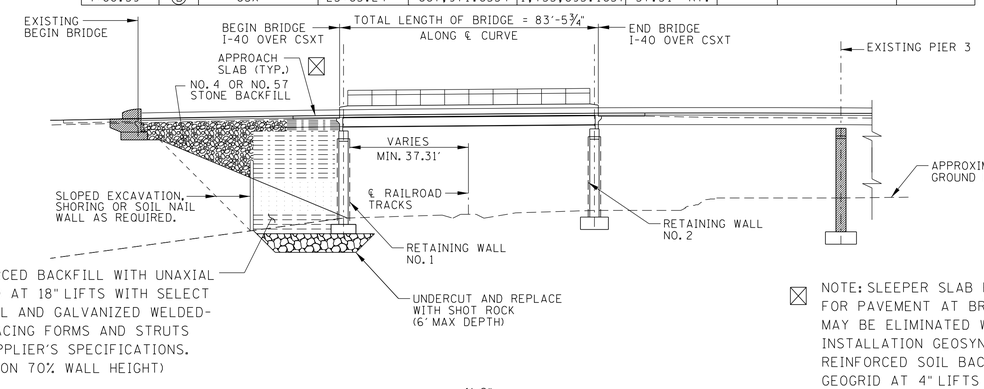

NOTE: SLEEPER SLAB FOOTING FOR PAVEMENT AT BRIDGE ENDS MAY BE ELIMINATED WITH THE INSTALLATION GEOSYNTHETICALLY REINFORCED SOIL BACKFILL WITH GEOGRID AT 4″ LIFTS WITH SELECT BACKFILL.

NOTE : THE RETAINING WALL PAY QUANTITY IS BASED ON THE SURFACE AREA OF CONCRETE FROM THE APPROXIMATE TOP OF WALL TO 2′ BELOW EXISTING GROUND LINE. (TOP OF CONCRETE LEVELING PAD)

FOR ESTIMATING PURPOSES, PER FOOT QUANTITIES FOR WALL HEIGHT OF 30 FOOT INCLUDES 6.0 CY CONCRETE AND 400 LBS REINFORCING STEEL. PER FOOT QUANTITIES FOR WALL HEIGHT OF 20 FOOT INCLUDES 4.5 CY CONCRETE AND 350 LBS REINFORCING STEEL. PER FOOT QUANTITIES FOR WALL HEIGHT OF 10 FOOT INCLUDES 3.0 CY CONCRETE AND 300 LBS REINFORCING STEEL.

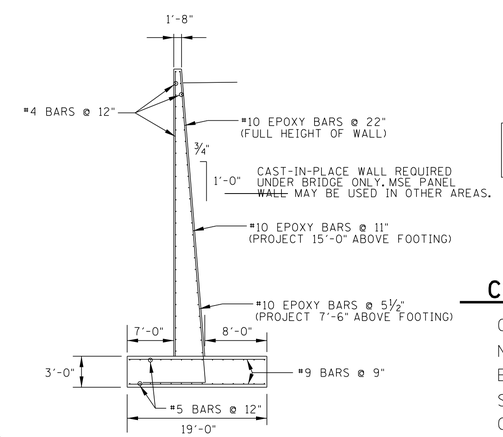

TOP OF WALL FOOTING ELEVATION TO MATCH EXISTING TOP OF BENT FOOTING ELEVATION BETWEEN COLUMNS AND BE A MINIMUM OF TWO FEET BELOW EXISTING GROUND LINE ELSEWHERE.

SEE SHEETS 2X AND 2Y FOR ADDITONAL NOTES AND DETAILS

CONTROL POINT DATA

CP-S56
N 668,072.5010
E 1,733,940.4226
STA. 1031+02.45
OFFSET 63.48′ RT.

SEALED BY

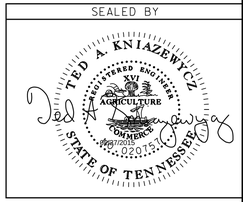

COORDINATES ARE NAD/83(1995), ARE DATUM ADJUSTED BY THE FACTOR OF 1.00006 AND TIED TO THE TGRN. ALL ELEVATIONS ARE REFERENCED TO THE NAVD 1988.

STATE OF TENNESSEE
DEPARTMENT OF TRANSPORTATION

RETAINING WALL CONCEPTUAL DRAWING
WALL NO. 1

SCALE: 1″=50′ HORIZ.
1″=5′ VERT.

3/9/2015 9:41:29 AM
0:\2807115\T\002P.sht