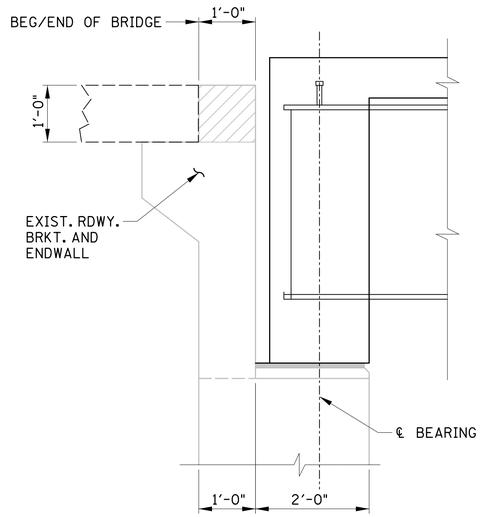

SECTION SHOWING PARTIAL EXIST. ENDWALL REMOVAL

DENOTES AREA OF EXIST. ENDWALL TO BE REMOVED

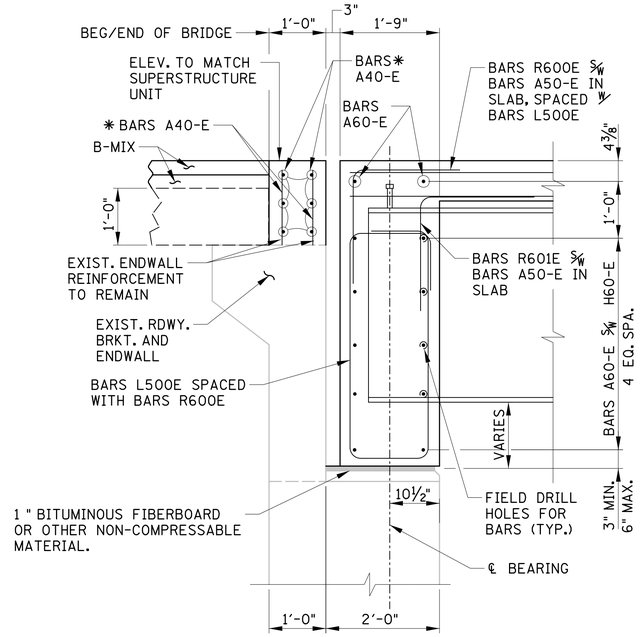

SECTION A-A

* FIELD CUT BARS TO MATCH EXIST. CONDITIONS

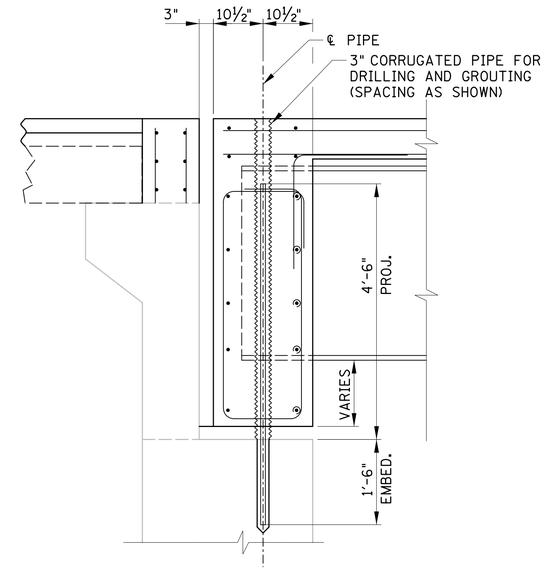

SECTION B-B

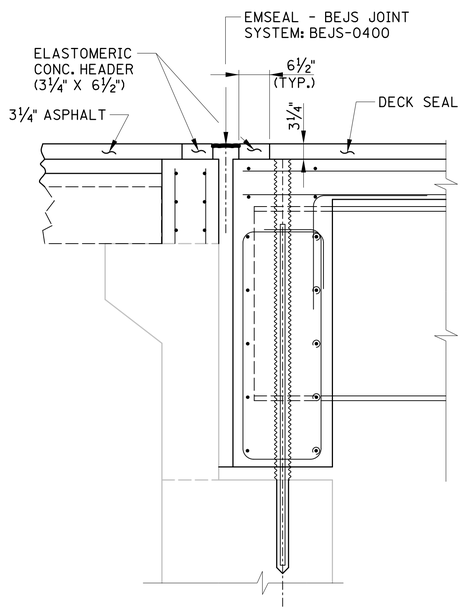

SECTION SHOWING EMSEAL - BEJS JOINT

NOTE: FOR ADDITIONAL JOINT DETAILS SEE STD. DWG. STD-1-5

CONST. NO. 19005-3161-44

PROJECT NO.	YEAR	SHEET NO.
BH-I-40-4(86)	2015	

REVISIONS

NO.	DATE	BY	BRIEF DESCRIPTION
1	2/12/15	GSP	UPDATED BEARING LINE DIMENSIONS

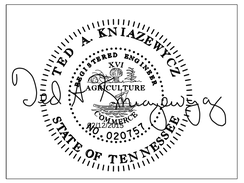

BRIDGE NO. 1

STATE OF TENNESSEE
DEPARTMENT OF TRANSPORTATION

1 ABUTMENT NOS. 1 & 2
ENDBLOCK DETAILS
I-40 OVER
HERMAN STREET
AND NWRR
BR. NO. 19-I0040-16.62
DAVIDSON COUNTY
2015

BR-119-38

DESIGNED BY GRESHAM SMITH & PARTNERS DATE 2/09/2015
DRAWN BY G.YOUNG DATE 1/2015
SUPERVISED BY T. KNIAZEWYCZ DATE 1/2015
CHECKED BY T. KNIAZEWYCZ DATE 2/2015

GS&P GRESHAM SMITH AND PARTNERS

kniazet
Q:\2807115\b\Bridge A Herman\Bridge 1\8071b15ab1a3c.sht
2/12/2015
PRF