CONST. NO.	19005-3161-44	
PROJECT NO.	YEAR	SHEET NO.
BH-I-40-4(86)	2015	

REVISIONS

NO.	DATE	BY	BRIEF DESCRIPTION
1	2/12/15	GSP	UPDATED DIMENSION
2	2/27/15	GSP	ADDED ℄ UPDATED DIMENSION

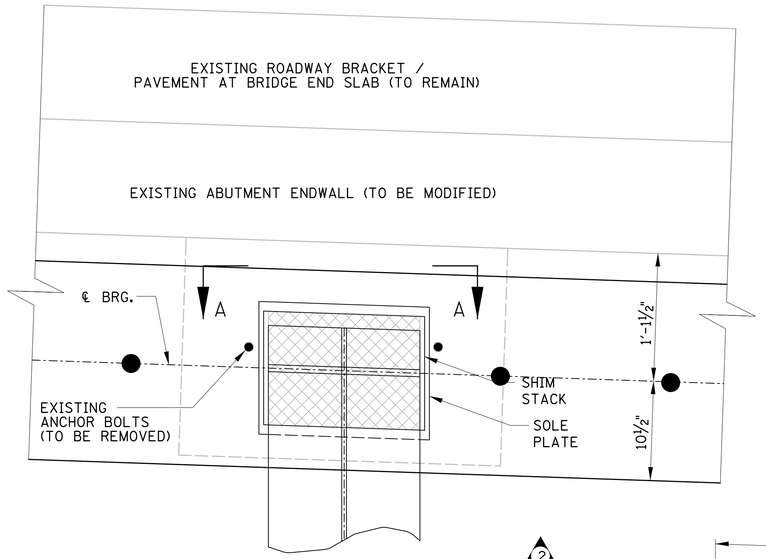

PLAN
ABUTMENT NO. 1 & 2

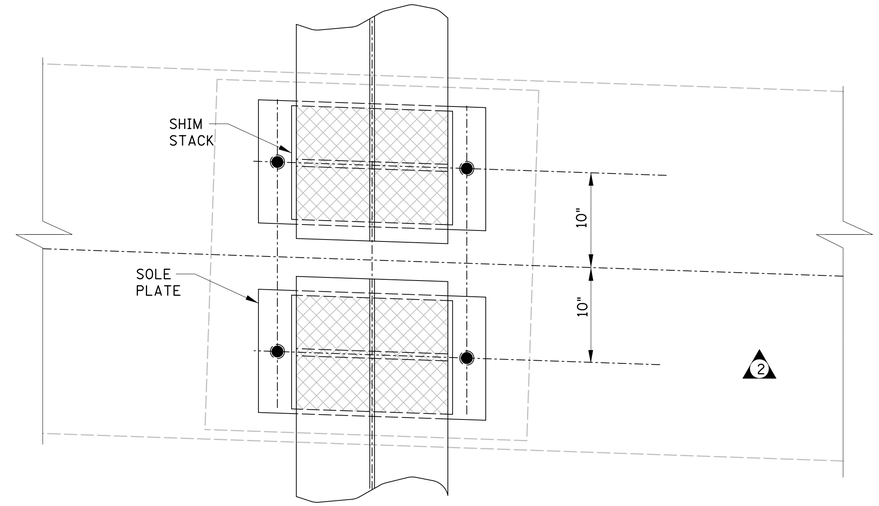

PLAN
BENTS NO. 1, 2 & 3

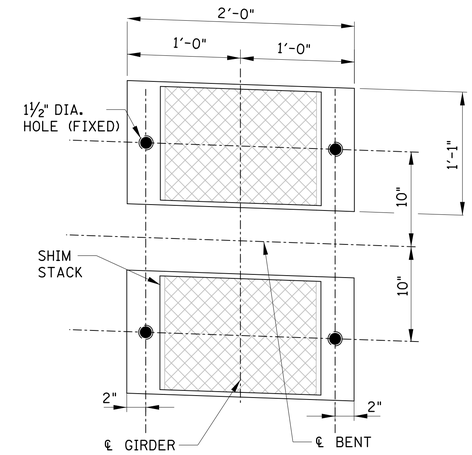

1½" SOLE PLATE
BENTS NO. 1, 2 & 3
(4 REQ'D. PER BEAM PER BENT)

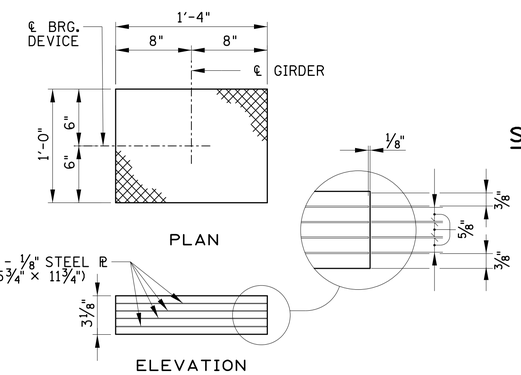

ELASTOMERIC BEARING
(ABUTMENT NO. 1 & 2)
(32 REQUIRED)

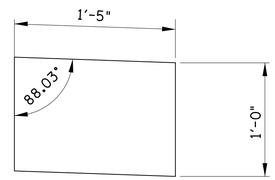

STACKED SHIM PLATE
(HEIGHT VARIES)

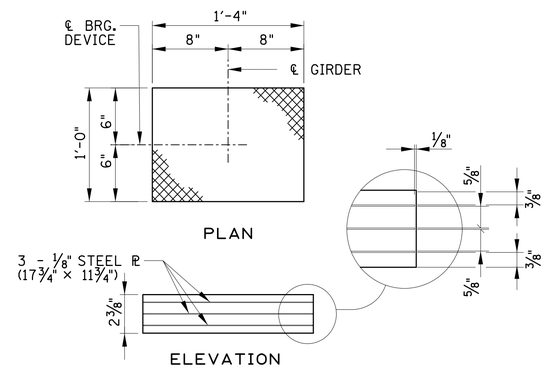

ELASTOMERIC BEARING
(BENTS NO. 1, 2 & 3)
(96 REQUIRED)

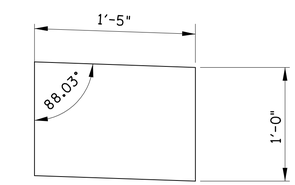

STACK SHIM PLATE
BENTS NO. 1, 2 & 3
(THICKNESS VARIES)

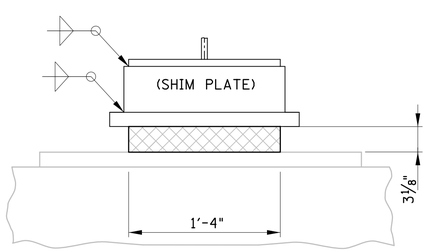

SECTION W-W

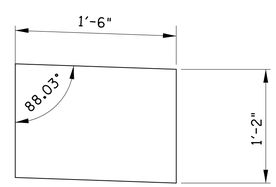

1½" SOLE PLATE
ABUTMENTS NO. 1 & 2

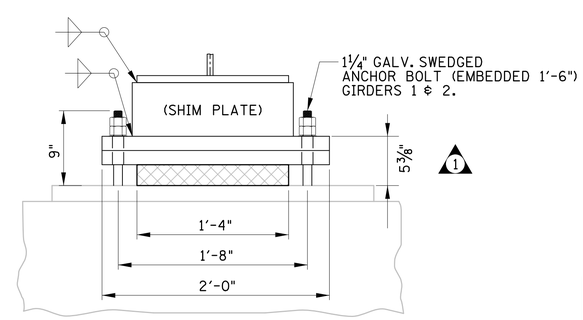

SECTION W-W

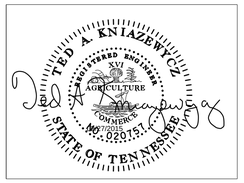

BRIDGE NO. 1

STATE OF TENNESSEE
DEPARTMENT OF TRANSPORTATION

BEARING DETAILS

I-40 OVER
HERMAN STREET
AND NWRR
BR. NO. 19-I0040-16.62
DAVIDSON COUNTY
2015

BR-119-31

DESIGNED BY GRESHAM SMITH & PARTNERS DATE 2/09/2015
DRAWN BY G.YOUNG DATE 1/2015
SUPERVISED BY T. KNIAZEWYCZ DATE 1/2015
CHECKED BY T. KNIAZEWYCZ DATE 2/2015

GRESHAM SMITH AND PARTNERS

knlazet
Q:\2807115\b\Bridge A Herman\Bridge 1\8071b15ab1bd.sht
3/7/2015
PRF