CONST. NO.	19005-3161-44	
PROJECT NO.	YEAR	SHEET NO.
BH-I-40-4(86)	2015	

REVISIONS

NO.	DATE	BY	BRIEF DESCRIPTION

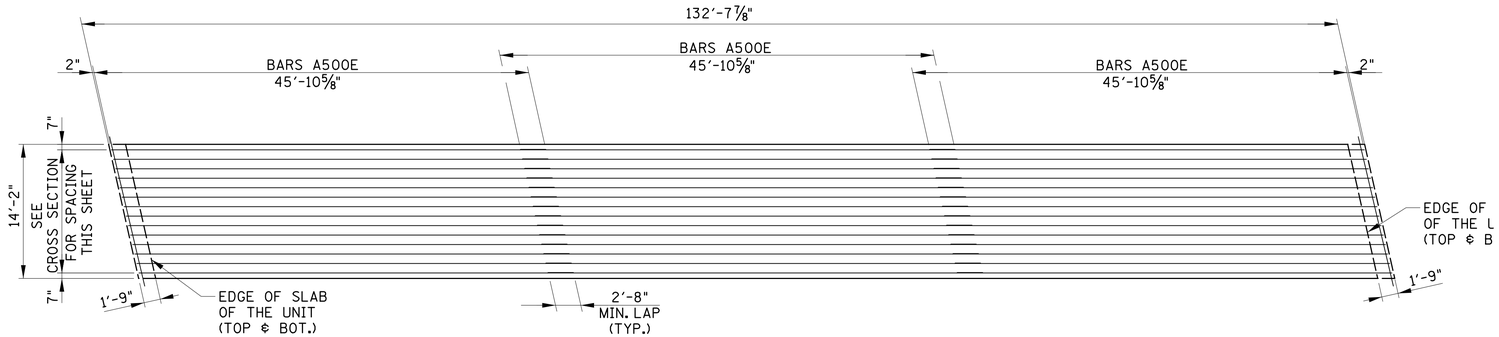

UNIT "B" SLAB PLAN - TOP MAT

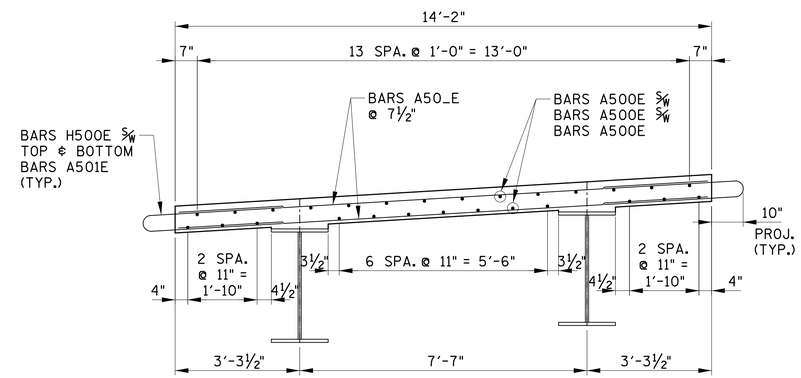

SLAB SECTION "B"

NOTE: VERTICAL FACE OF SUPERSTRUCTURE UNITS SHALL BE ROUGHENED AT TIME OF CASTING BY

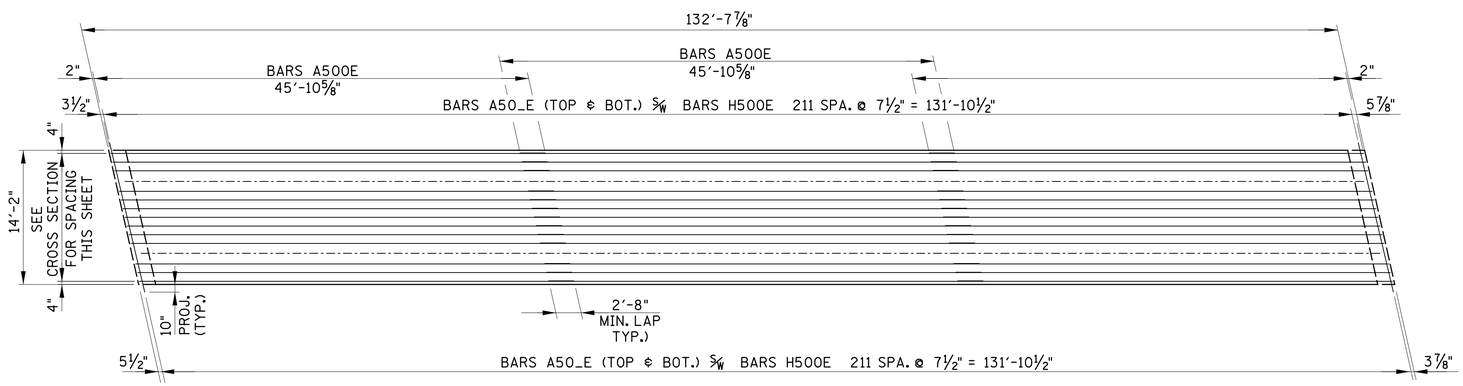

UNIT "B" SLAB PLAN - BOTTOM MAT

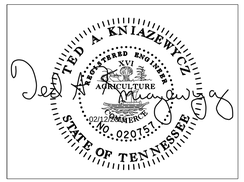

BRIDGE NO. 5

STATE OF TENNESSEE
DEPARTMENT OF TRANSPORTATION

SUPERSTRUCTURE DETAILS
SLAB UNIT LAYOUT
I-40
OVER
CHARLOTTE AVE.
BR. NO. 19-I0040-17.09
DAVIDSON COUNTY
2015

BR-119-188

DESIGNED BY GRESHAM SMITH & PARTNERS	DATE 2/09/2015	GS&P	GRESHAM SMITH AND PARTNERS
DRAWN BY G.YOUNG	DATE 1/2015		
SUPERVISED BY T. KNIAZEWYCZ	DATE 1/2015		
CHECKED BY T. KNIAZEWYCZ	DATE 2/2015		

knlazet
Q:\2807115\b\Bridge D Charlotte\Bridge 1\8071b15db1s4.sht
2/12/2015
PRF