CONST. NO.	19005-3161-44	
PROJECT NO.	YEAR	SHEET NO.
BH-I-40-4(86)	2015	

REVISIONS

NO.	DATE	BY	BRIEF DESCRIPTION

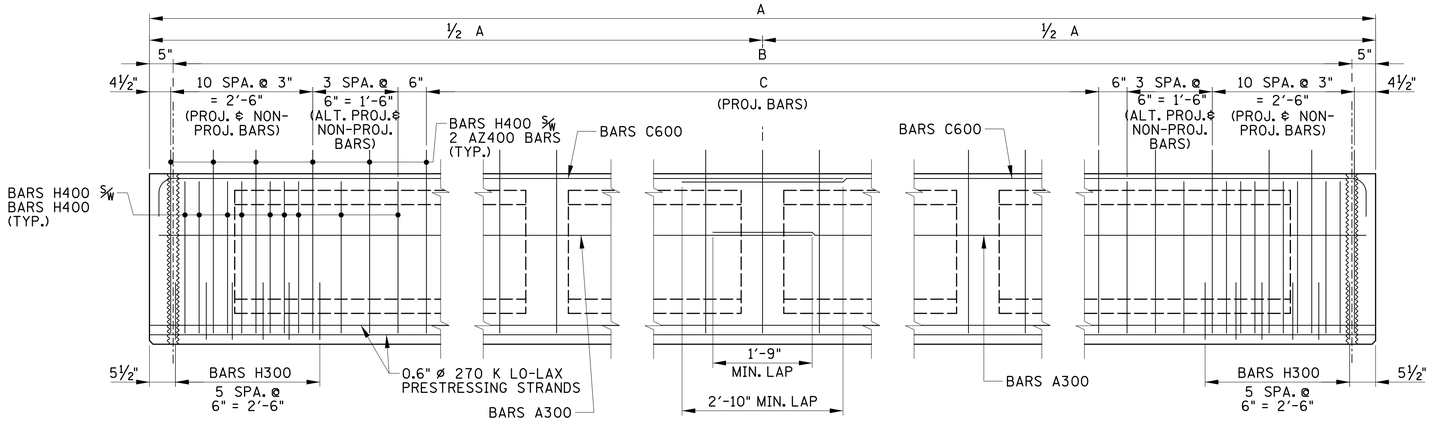

ELEVATION

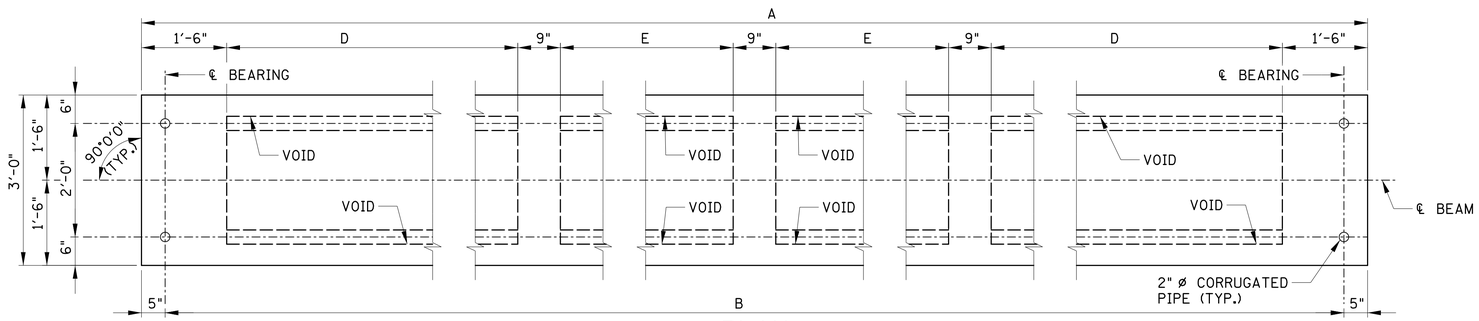

PLAN

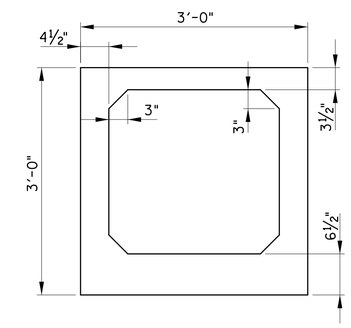

TYPICAL CROSS-SECTION

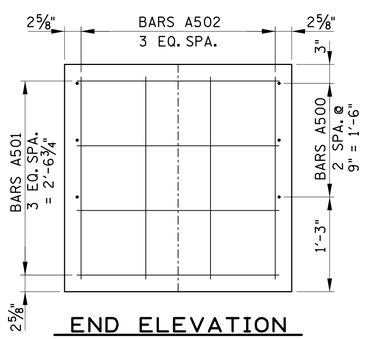

END ELEVATION

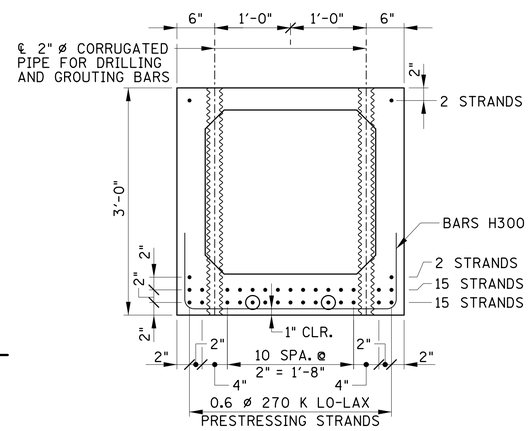

SECTION

(SHOWING PRESTRESSED STRANDS)
(SHOWING CORRUGATED PIPE @ ℄ BEARING)
⊙ DENOTES: DEBOND STRANDS 6'-0" FROM EACH END.

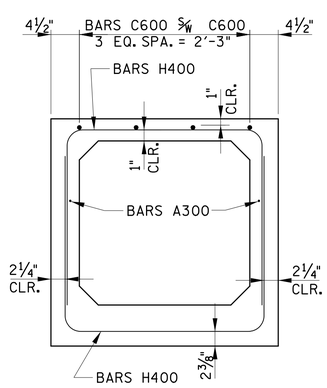

SECTION A-A

(SHOWING NON-PROJECTED BARS)

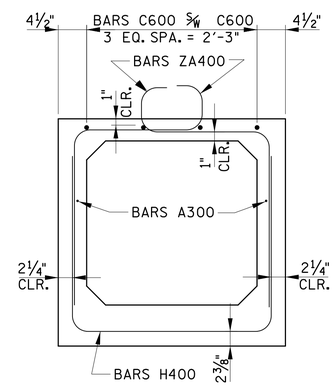

SECTION A-A

(SHOWING PROJECTED BARS)

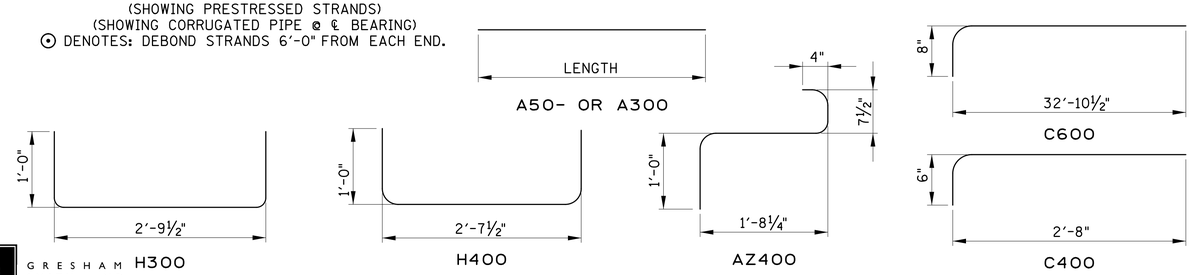

GENERAL NOTES

SPECIFICATIONS: STANDARD ROAD AND BRIDGE SPECIFICATIONS OF THE TENNESSEE DEPARTMENT OF TRANSPORTATION (JANUARY 1, 2015 EDITION)

NOTE: THE CONCRETE FOR THIS CONSTRUCTION SHALL BE OF SUCH PROPERTIES AS TO ATTAIN A COMPRESSIVE STRENGTH OF NOT LESS THAN 9,500 psi AT THE AGE OF 28 DAYS AND STRESS TRANSFER SHALL NOT BE MADE TO THE BRIDGE MEMBER UNTIL THE TEST SPECIMENS INDICATE THAT THE CONCRETE HAS REACHED A COMPRESSIVE STRENGTH OF AT LEAST 7,000 psi. SEE GENERAL NOTES FOR CONCRETE FINISHING NOTE.

STRANDS: 7 WIRE, UNCOATED, STRESS RELIEVED LOW RELAXATION PRESTRESSING CONCRETE STRAND. 0.6" DIA. ASTM GRADE 270K, THE INITIAL TENSION APPLIED SHALL BE 43,943 lbs. PER STRAND. As= 0.217 in . DO NOT PROJECT STRANDS FROM END OF BEAMS.
2

UNLESS OTHERWISE NOTED, MINIMUM CLEAR DISTANCE FORM THE FACE OF CONCRETE TO ANY REINFORCING BAR IS (1) ONE INCH. BAR SPACING DIMENSIONS ARE CENTER TO CENTER.

REINFORCING STEEL: TO BE ASTM A615 GRADE 60. MINIMUM LAP SPLICE FOR #6 BARS IS 2'-9".

IF BEAMS ARE NOT INSTALLED DIRECTLY FROM DELIVERY TRUCKS, THEY SHALL BE STORED AND HANDLED IN SUCH MANNER AS TO AVOID EXCESSIVE BENDING STRESSES, CRACKING, SPALLING, OR OTHER INJURY. THE BEAMS SHALL BE MAINTAINED IN AN UPRIGHT POSITION, AND KEPT CLEAN OF MUD AND DIRT.

THE TOP OF ALL BEAMS TO BE ROUGH FLOATED, AT APPROXIMATELY THE TIME OF INITIAL SET, THE TOP OF THE BEAM WILL ALSO BE SCRUBBED TRANSVERSELY WITH A COARSE WIRE BRUSH TO REMOVE ALL LAITANCE AND PRODUCE A ROUGH SURFACE. WHERE PRECAST DECK PANELS ARE TO BE USED AND SET ON PADS. THE OUTER (12) TWELVE INCHES OF THE TOP FLANGE SHALL BE TROWELED.

SEE STD. DWG. STD-14-3 FOR ADDITIONAL DETAILS.

PRESTRESSED BEAM DESIGN DATA (PER BEAM):
- LLDFm = 0.756 LANES/GIRDER
- LLDFv = 0.785 LANES/GIRDER
- COMPOSITE DEAD LOAD: DM = 112.5 LB/FT, DC = 280 LB/FT
- COMPOSITE SLAB DESIGN STRENGTH: f'c = 3000 psi

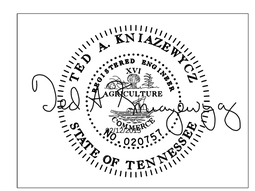

BRIDGE NO. 2

STATE OF TENNESSEE
DEPARTMENT OF TRANSPORTATION

PRESTRESSED BOX BEAM DETAILS SHEET 1 OF 2

I-40
OVER
CSX RAILROAD
BR. NO. 19-I0040-16.75
DAVIDSON COUNTY
2015

BR-119-52

DESIGNED BY	GRESHAM SMITH & PARTNERS	DATE	2/09/2015
DRAWN BY	R. PALMER	DATE	1/2015
SUPERVISED BY	T. KNIAZEWYCZ	DATE	1/2015
CHECKED BY	T. KNIAZEWYCZ	DATE	2/2015

GRESHAM SMITH AND PARTNERS

knizet
Q:\2807115\b\Bridge B Clinton\bridge 1\8071b15b1g1.sht
2/12/2015
PRF