TYPE	YEAR	PROJECT NO.	SHEET NO.
CONST.	2015	BH-I-40-4(86)	2M

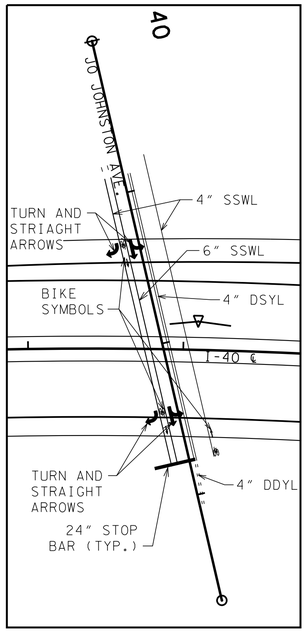

DETAILS FOR SHEET 6A

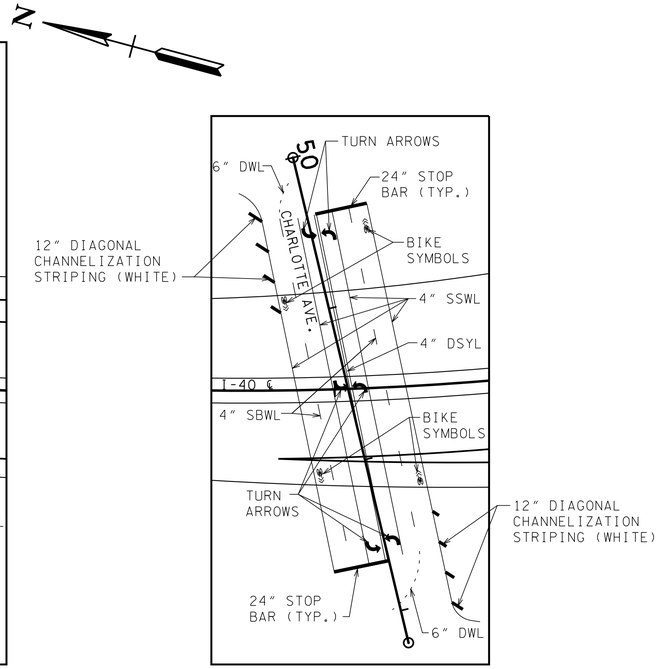

DETAILS FOR SHEET 7A

OUTSIDE BARRIER PROTECTION ON SOUTHBOUND I-40

STA. 1035+00 RIGHT
STA. 1038+00 RIGHT
STA. 1038+50 RIGHT

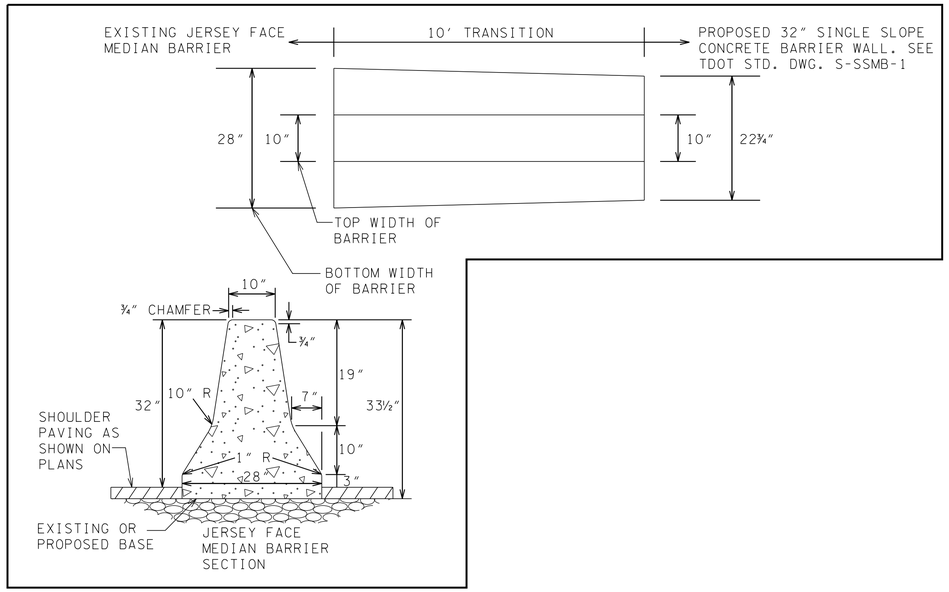

DETAIL FOR TRANSITION FROM EXISTING BARRIER TO PROPOSED BARRIER

MEDIAN BARRIER AT EXISTING OVERHEAD SIGN STRUCTURES

SEE TDOT STD.DWG. S-SSMB-4 FOR MORE DETAILS

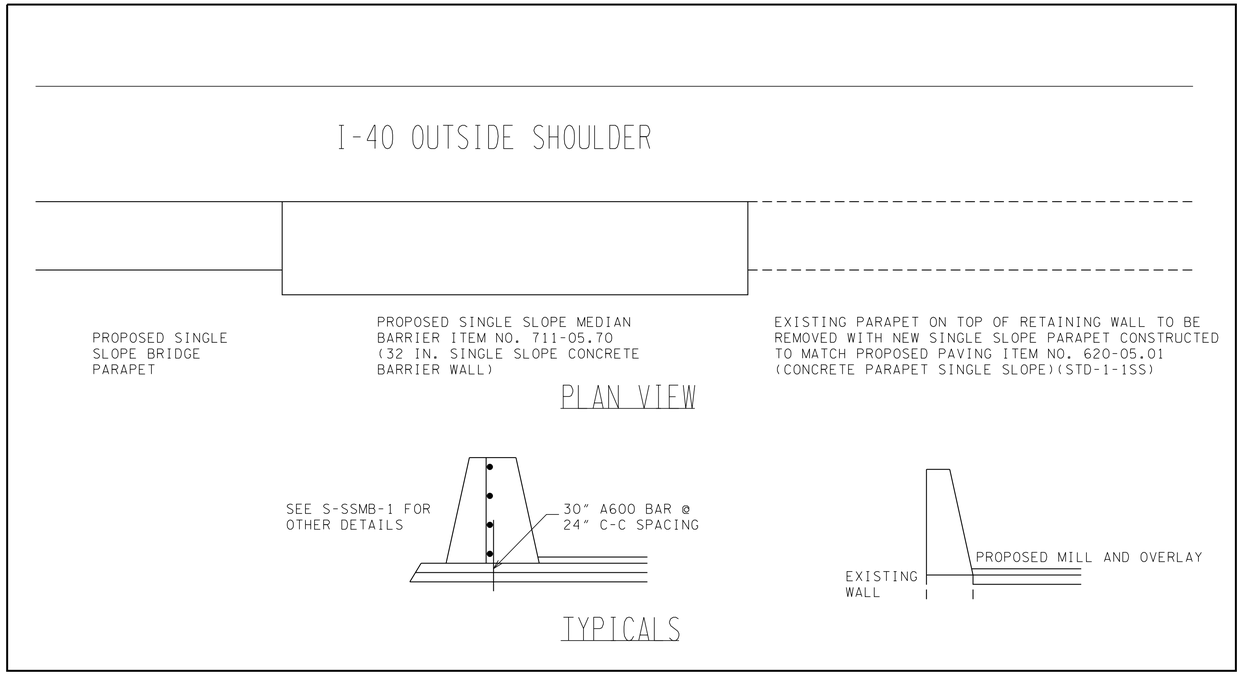

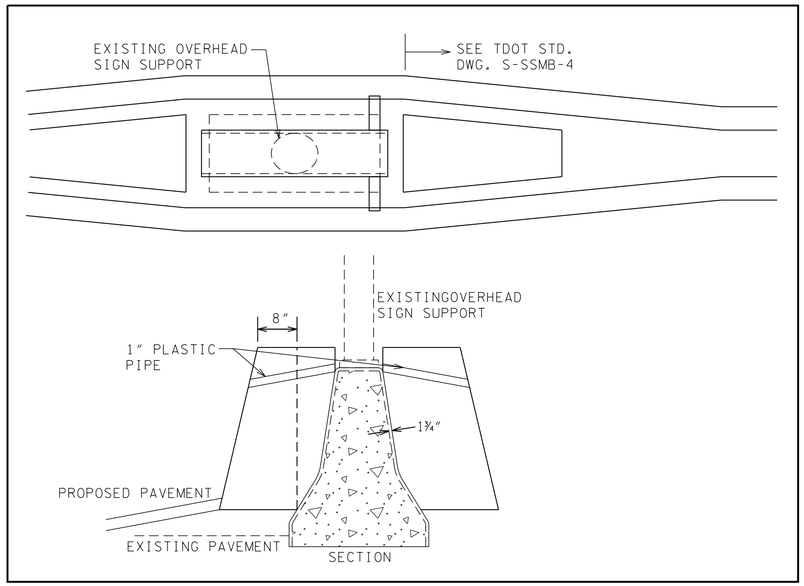

SEALED BY

STATE OF TENNESSEE
DEPARTMENT OF TRANSPORTATION

DETAILS

SCALE: 1"=50'

2/12/2015 4:41:32 PM
G:\2807115\t\002M.sht