CONST. NO.	19005-3161-44	
PROJECT NO.	YEAR	SHEET NO.
BH-I-40-4(86)	2015	

REVISIONS

NO.	DATE	BY	BRIEF DESCRIPTION

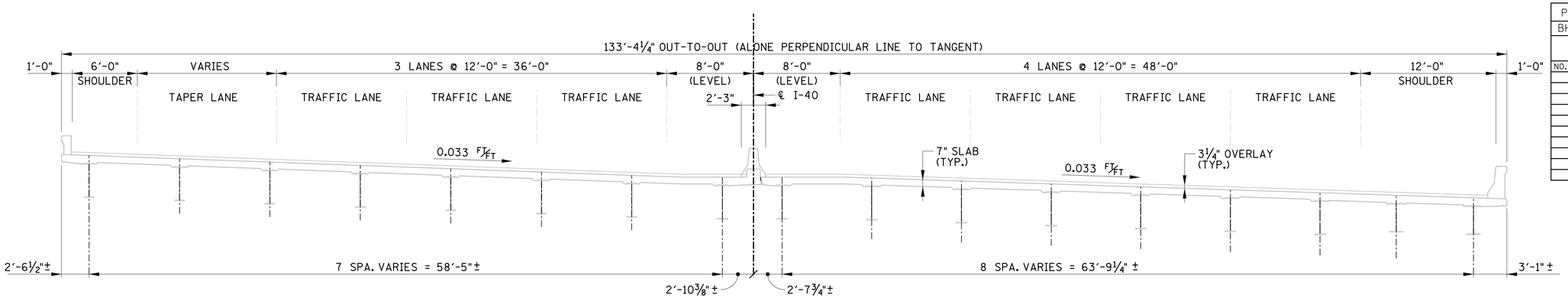

EXISTING CROSS-SECTION

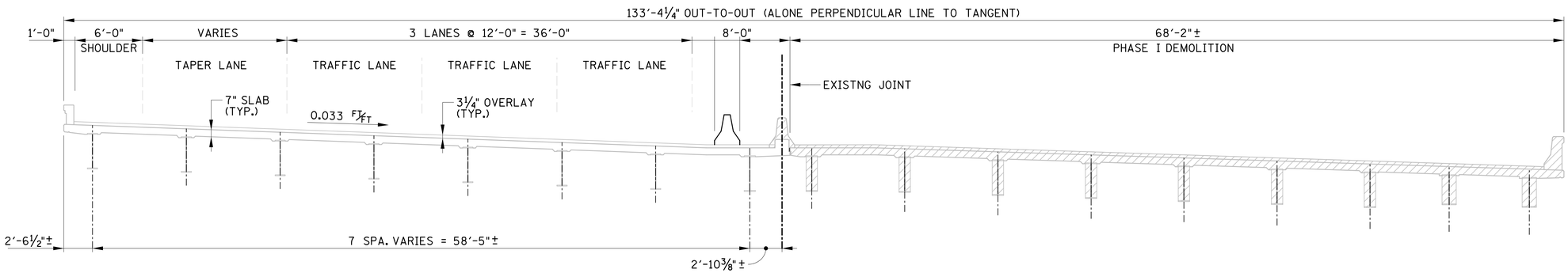

PHASE I DEMOLITION

SEE TRAFFIC CONTROL PLANS FOR LANE AND SHOULDER WIDTH REQUIREMENTS.

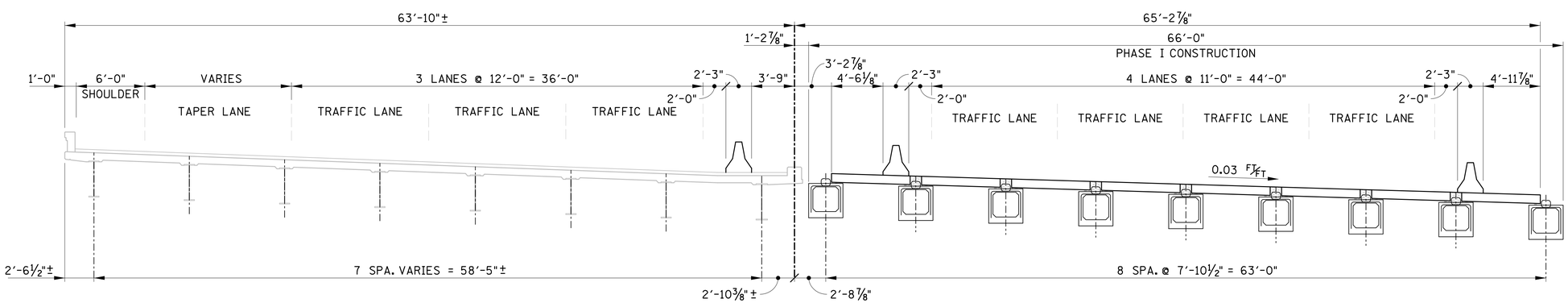

PHASE I CONSTRUCTION

SEE TRAFFIC CONTROL PLANS FOR LANE AND SHOULDER WIDTH REQUIREMENTS.

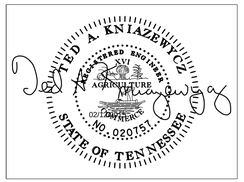

BRIDGE NO. 2

STATE OF TENNESSEE
DEPARTMENT OF TRANSPORTATION

CONSTRUCTION SEQUENCE
SHEET 1 OF 2
I-40
OVER
CSX RAILROAD
BR. NO. 19-I0040-16.75
DAVIDSON COUNTY
2015

BR-119-48

DESIGNED BY GRESHAM SMITH & PARTNERS DATE 2/09/2015
DRAWN BY R. PALMER DATE 1/2015
SUPERVISED BY T. KNIAZEWYCZ DATE 1/2015
CHECKED BY T. KNIAZEWYCZ DATE 2/2015

GRESHAM SMITH AND PARTNERS

kniazet
Q:\2807115\b\Bridge B Clinton\bridge 1\807ib15b1c1.sht
2/12/2015
PRF