CONST. NO.	19005-3161-44	
PROJECT NO.	YEAR	SHEET NO.
BH-I-40-4(86)	2015	

REVISIONS

NO.	DATE	BY	BRIEF DESCRIPTION
NO.	2/27/15	GSP	REVISED WELD DETAIL

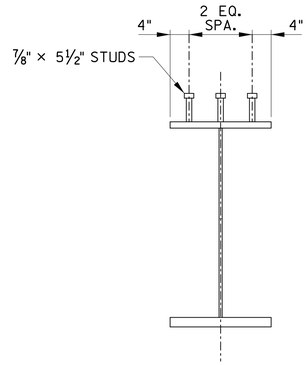

TYPICAL SECTION

NOTE: THE FABRICATOR MAY SUBSTITUTE A SINGLE PLATE AT END OF A STIFFENER. THE LOCATION OF BOLTS AND THE LENGTH PARALLEL TO THE STIFFENER SHALL NOT CHANGE. THE PLATE LENGTH PARALLEL TO THE WEB PLATE MUST BE 6" PLUS THE STIFFENER PLATE THICKNESS.

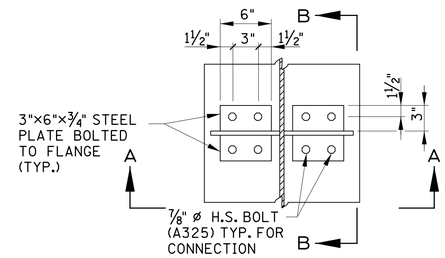

PLAN

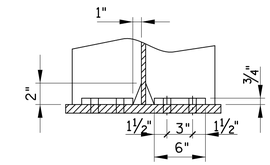

SECTION A-A

(STIFFENER CLIP DIMENSIONS TYP.)

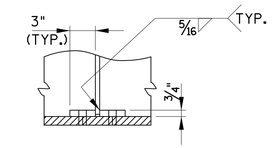

SECTION B-B

TOP AND BOTTOM FLANGE CONNECTION DETAILS

(NOTE: TYPICAL BOTTOM FLANGE)

(NOTE: BOLTS TO BE TORQUED TO AASHTO SPECIFICATIONS FOR FRICTION CONNECTIONS PRIOR TO TAB TO STIFFNER WELD)

(NOTE: WEB STIFFNER FIT SHALL BE WITHIN AASHTO/AWS D1.5-2010 FABRICATION TOLERENCE)

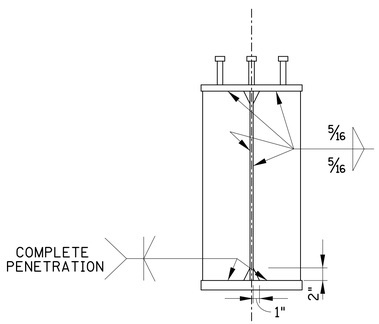

SECTION @ BEARING

3/4" × 8 1/2"
BEARING STIFFENERS

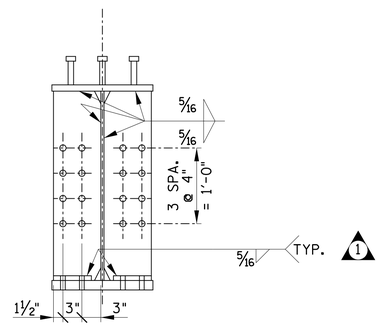

SECTION @ DIAPHRAGM

3/4" × 7 1/2"
DIAPHRAGM CONNECTOR

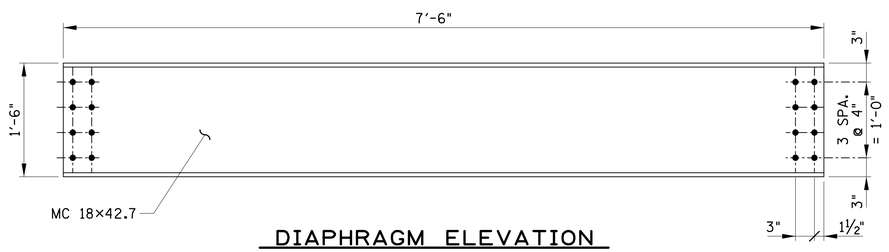

DIAPHRAGM ELEVATION

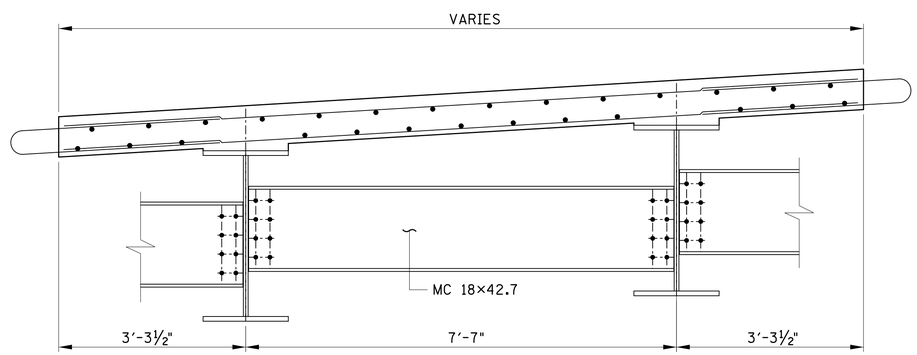

SLAB SECTION SHOWING DIAPHRAGM CONNECTION

BRIDGE NO. 5

STATE OF TENNESSEE
DEPARTMENT OF TRANSPORTATION

GIRDER DETAILS

I-40
OVER
CHARLOTTE AVE.
BR. NO. 19-I0040-17.09
DAVIDSON COUNTY
2015

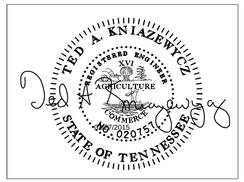

DESIGNED BY	GRESHAM SMITH & PARTNERS	DATE	2/09/2015
DRAWN BY	G.YOUNG	DATE	1/2015
SUPERVISED BY	T. KNIAZEWYCZ	DATE	1/2015
CHECKED BY	T. KNIAZEWYCZ	DATE	2/2015

GRESHAM SMITH AND PARTNERS

knlazet
Q:\2807115\b\Bridge D Charlotte\Bridge 1\807115dblgla.sht
3/7/2015
PRF

BR-119-185