CONST. NO. 19005-3161-44

PROJECT NO.	YEAR	SHEET NO.
BH-I-40-4(86)	2015	

REVISIONS

NO.	DATE	BY	BRIEF DESCRIPTION
1	2/12/15	GS&P	ADDED CAMBER DATA & DIMENSION

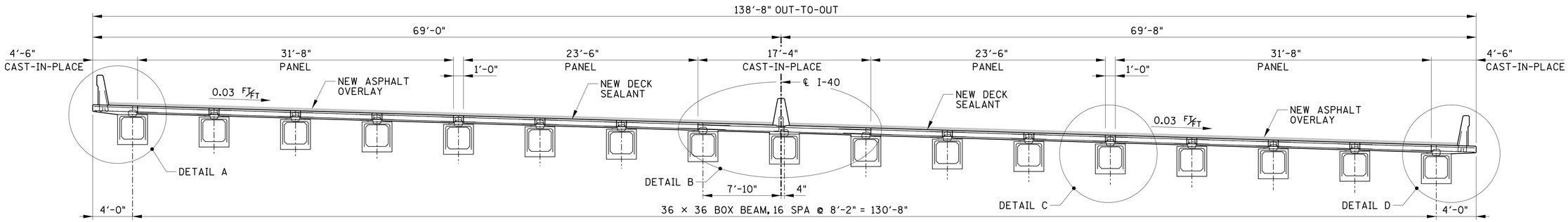

TYPICAL CROSS-SECTION

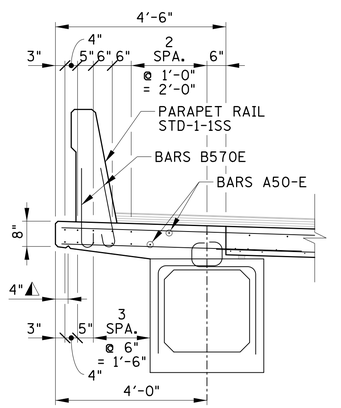

◭ DENOTES: ¾" TRIANGULAR DRIP NOTCH TO RUN FULL LENGTH OF SLAB

DETAIL A

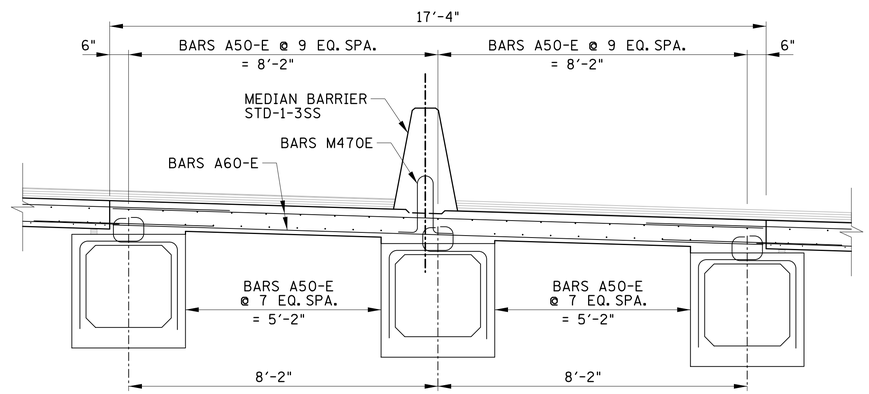

DETAIL B

NOTE: MINIMUM ALLOWABLE TOP COVER FOR BARS IN CLOSURE POUR SHALL BE 1¾".

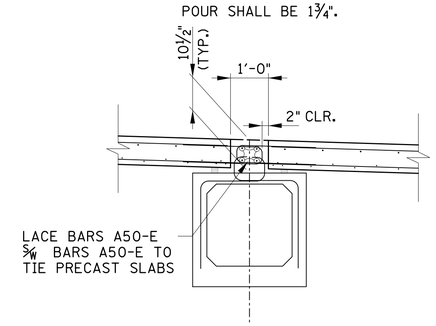

DETAIL C

(ASPHALT OVERLAY OMITTED FOR CLARITY)

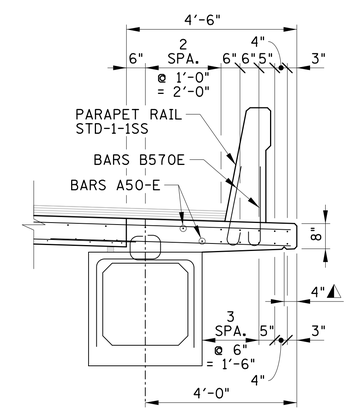

◭ DENOTES: ¾" TRIANGULAR DRIP NOTCH TO RUN FULL LENGTH OF SLAB

DETAIL D

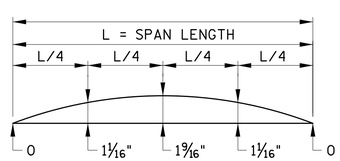

THEORETICAL CAMBER CURVE

THERETICAL CAMBER CURVE: THIS CURVE IS FOR THEORETICAL PRESTRESS CAMBER LESS DEAD LOAD WEIGHT OF BEAM.

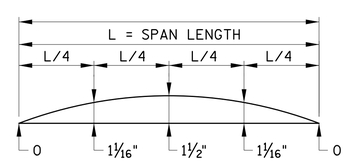

DEAD LOAD CORRECTION CURVE

DEAD LOAD CORRECTION CURVE: THIS CURVE IS FOR DEAD LOAD SLAB AND ALL DEAD LOADS THAT ARE APPLIED AFTER SLAB IS IN PLACE AND SHOULD BE CORRECTED TO COMPENSATE FOR THE EFFECTS DUE TO VERTICAL CURVE.

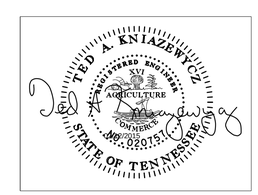

BRIDGE NO. 3

STATE OF TENNESSEE
DEPARTMENT OF TRANSPORTATION

SUPERSTRUCTURE

I-40
OVER
CLINTON STREET
BR. NO. 19-I0040-16.75
DAVIDSON COUNTY
2015

BR-119-89

DESIGNED BY	GRESHAM SMITH & PARTNERS	DATE	2/09/2015
DRAWN BY	R. PALMER	DATE	1/2015
SUPERVISED BY	T. KNIAZEWYCZ	DATE	1/2015
CHECKED BY	T. KNIAZEWYCZ	DATE	2/2015

GRESHAM SMITH AND PARTNERS

knizazet
Q:\2807115\b\Bridge B Clinton\bridge 2\807lb15b2s1.sht
2/13/2015
PRF