CONST. NO. 19005-3161-44

PROJECT NO.	YEAR	SHEET NO.
BH-I-40-4(86)	2015	

REVISIONS

NO.	DATE	BY	BRIEF DESCRIPTION

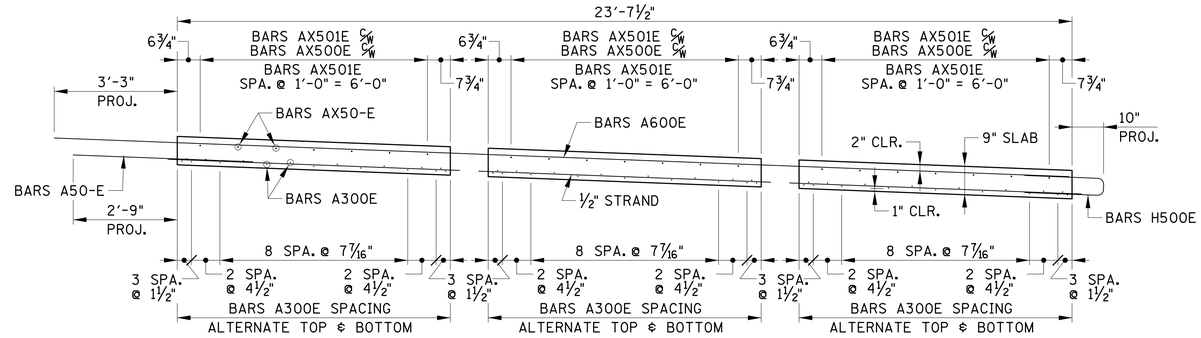

PANEL SECTION

(3 PANELS REQUIRED)

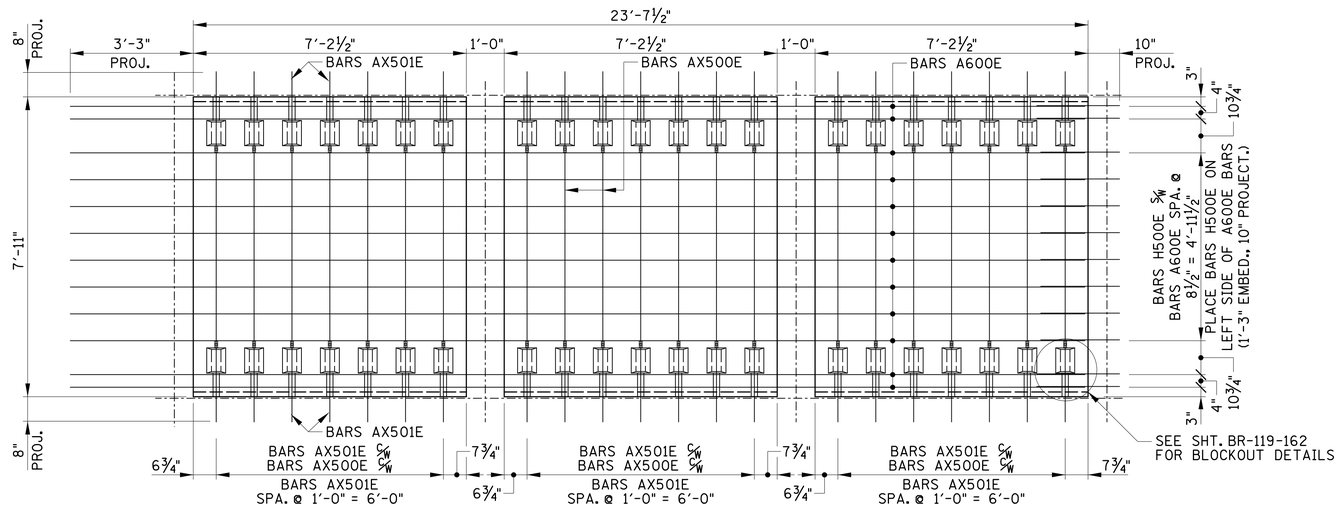

PANEL (TOP MAT)

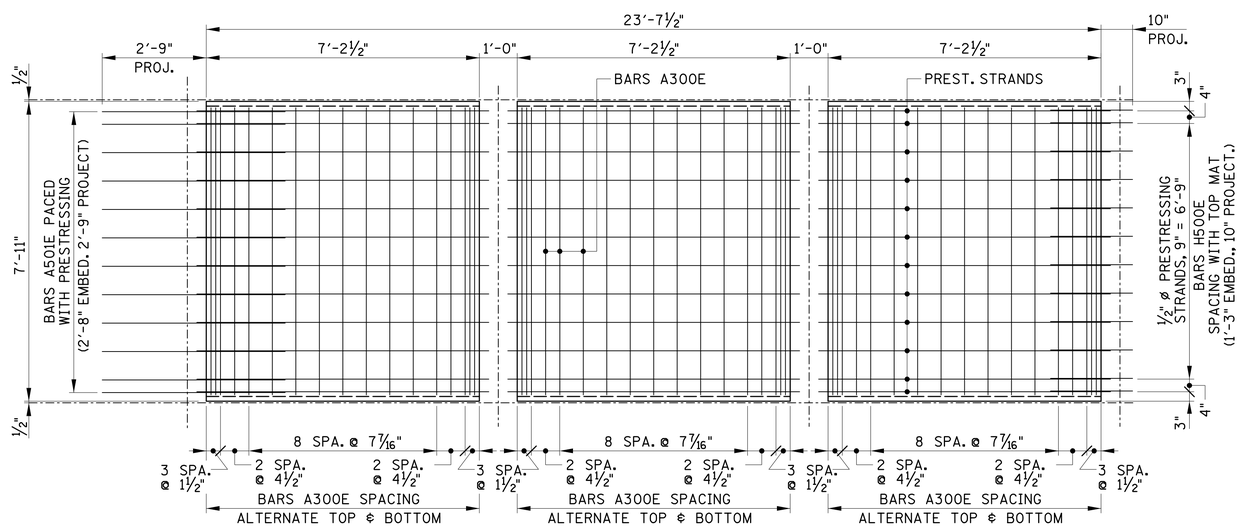

PANEL (BOTTOM MAT)

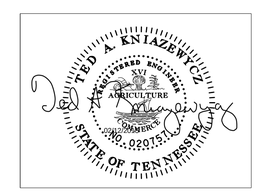

BRIDGE NO. 4

STATE OF TENNESSEE
DEPARTMENT OF TRANSPORTATION

PANEL D-3 DETAIL

I-40
OVER
JO JOHNSTON AVE.
BR. NO. 19-I0040-16.88
DAVIDSON COUNTY
2015

BR-119-150

DESIGNED BY GRESHAM SMITH & PARTNERS DATE 2/09/2015
DRAWN BY R. PALMER DATE 1/2015
SUPERVISED BY T. KNIAZEWYCZ DATE 1/2015
CHECKED BY T. KNIAZEWYCZ DATE 2/2015

GRESHAM SMITH AND PARTNERS

knizet
Q:\2807115\b\Bridge C Jo Johnston\bridge 1\8071b15cb1s14.sht
2/13/2015
PRF