CONST. NO. 19005-3161-44

PROJECT NO.	YEAR	SHEET NO.
BH-I-40-4(86)	2015	

REVISIONS

NO.	DATE	BY	BRIEF DESCRIPTION

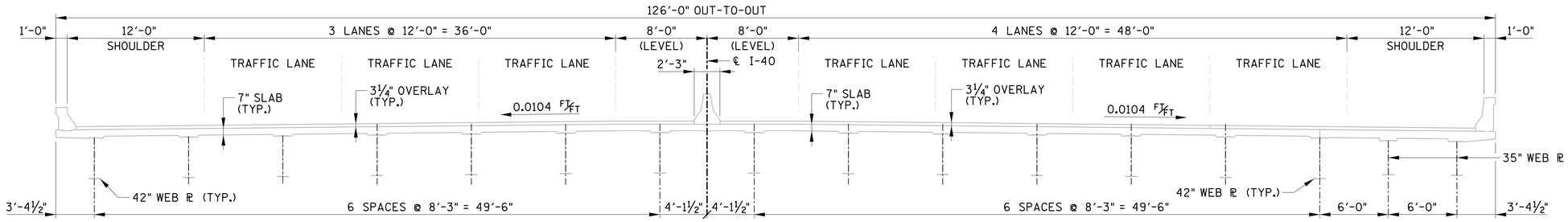

EXISTING CROSS-SECTION

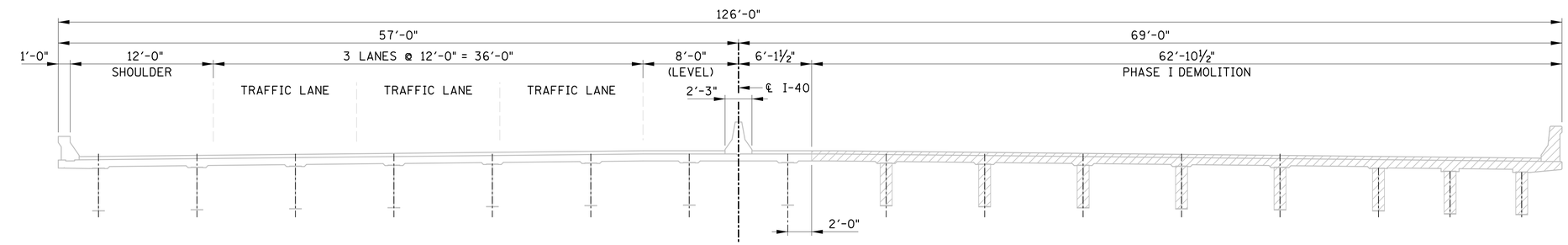

PHASE I DEMOLITION

SEE TRAFFIC CONTROL PLANS FOR LANE AND SHOULDER WIDTH REQUIREMENTS.

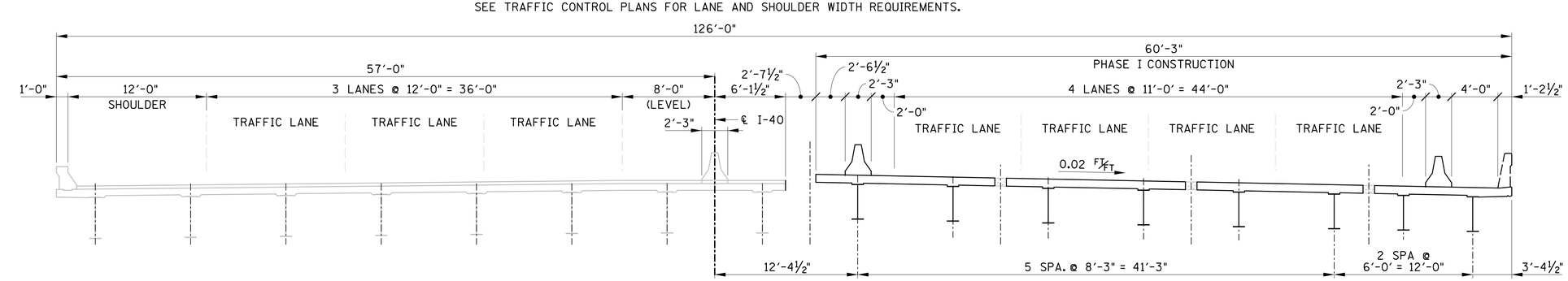

PHASE I CONSTRUCTION

SEE TRAFFIC CONTROL PLANS FOR LANE AND SHOULDER WIDTH REQUIREMENTS.

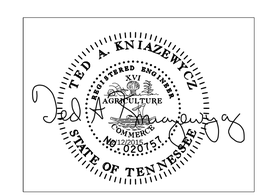

BRIDGE NO. 1

STATE OF TENNESSEE
DEPARTMENT OF TRANSPORTATION

CONSTRUCTION SEQUENCE
SHEET 1 OF 2
I-40 OVER
HERMAN STREET
AND NWRR
BR. NO. 19-I0040-16.62
DAVIDSON COUNTY
2015

BR-119-05

DESIGNED BY GRESHAM SMITH & PARTNERS DATE 2/09/2015
DRAWN BY G.YOUNG DATE 1/2015
SUPERVISED BY T. KNIAZEWYCZ DATE 1/2015
CHECKED BY T. KNIAZEWYCZ DATE 2/2015

GRESHAM SMITH AND PARTNERS

knizzet
Q:\2807115\b\Bridge A Herman\Bridge 1\807lb15ab1c1.sht
2/12/2015
PRF