CONST. NO.	19005-3161-44	
PROJECT NO.	YEAR	SHEET NO.
BH-I-40-4(86)	2015	

REVISIONS

NO.	DATE	BY	BRIEF DESCRIPTION

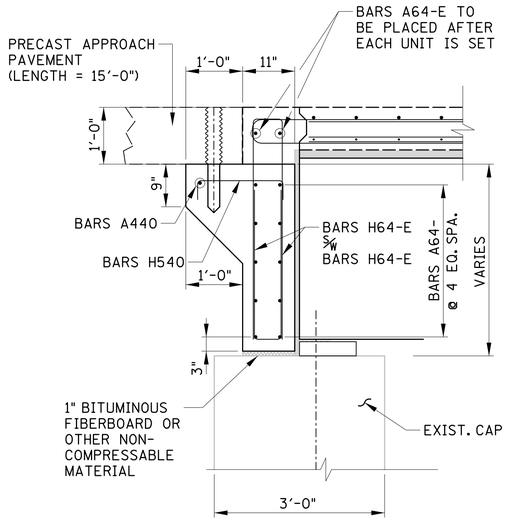

SECTION B-B

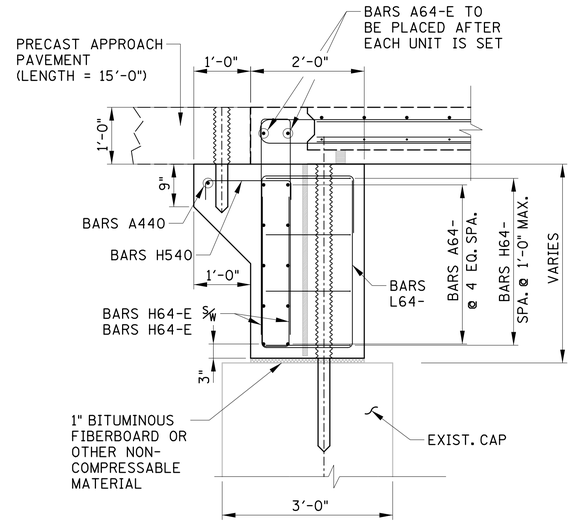

SECTION C-C

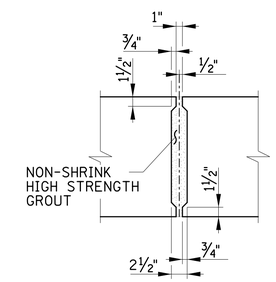

JOINT DETAIL

NOTE: THE JOINT FACE SHALL BE SAND-BLAST FINISHED PRIOR TO PLACING OF NON-SHRINK GROUT.

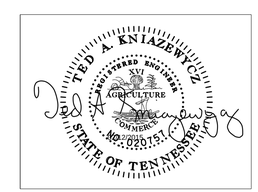

BRIDGE NO. 2

STATE OF TENNESSEE
DEPARTMENT OF TRANSPORTATION

ABUTMENT NOS. 1 & 2
PRECAST ENDWALL DETAILS
I-40
OVER
CSX RAILROAD
BR. NO. 19-I0040-16.75
DAVIDSON COUNTY
2015

BR-119-78

DESIGNED BY GRESHAM SMITH & PARTNERS DATE 2/09/2015
DRAWN BY R. PALMER DATE 1/2015
SUPERVISED BY T. KNIAZEWYCZ DATE 1/2015
CHECKED BY T. KNIAZEWYCZ DATE 2/2015

GRESHAM SMITH AND PARTNERS

knizet
Q:\2807115\b\Bridge B Clinton\bridge 1\8071b15b1b3.sht

2/12/2015
PRF