TYPE	YEAR	PROJECT NO.	SHEET NO.
CONST.	2015	BH-I-40-4(86)	43F

TYPICAL CABLE COIL INSTALLATION GUIDE

(FEET OF COIL LENGTH PER ENTERING CABLE)

CABLE TYPE	TYPE "C" PULL BOX	TYPE "D" PULL BOX ON TRUNK	TYPE "D" PULL BOX ON DROP	TYPE "E" PULL BOX
FIBER OPTIC CABLES (TRUNK)		50		200
FIBER OPTIC CABLES (DROP)			25	100
ELECTRICAL SERVICE CONDUCTORS	10			
VDS LEAD-IN CABLE			10	
RDS COMM CABLE		20	20	20
DMS COMM CABLE			10	

NOTE: SEE TSP 725 FOR ADDITIONAL INFORMATION

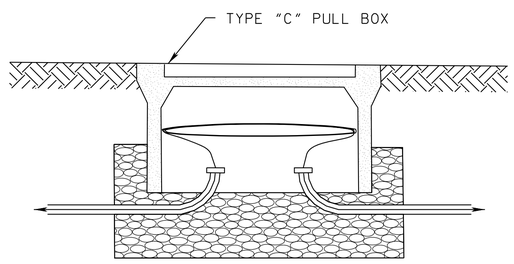

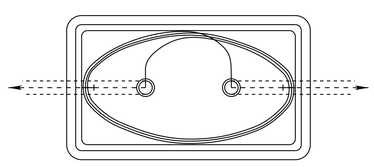

CABLE MANAGEMENT IN TYPE "C" PULL BOX

N.T.S.

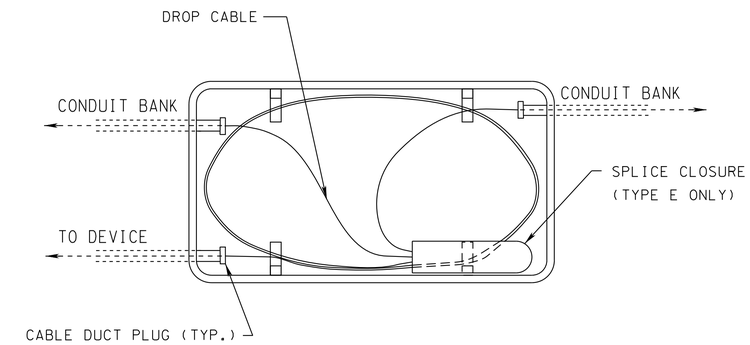

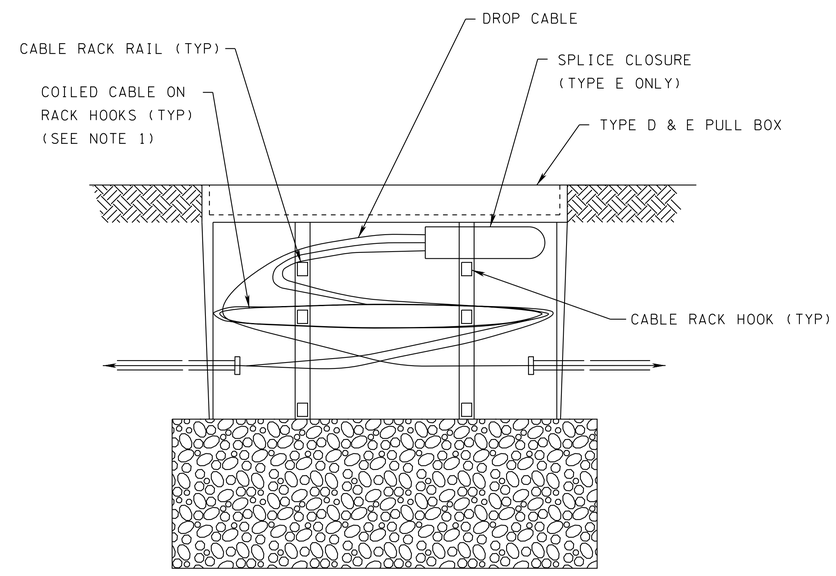

CABLE MANAGEMENT IN TYPE D & E PULL BOX

N.T.S.

NOTES: 1. FIBER TRUNK AND DROP CABLE SHALL BE COILED TOGETHER. EACH RDS COMM CABLE SHALL BE COILED SEPARATELY AND SUPPORTED ON RACK HOOKS.

2. CONDUIT MAY ENTER THE LONG SIDE OF THE PULL BOX WHEN FIELD CONDITIONS WARRANT

SEALED BY

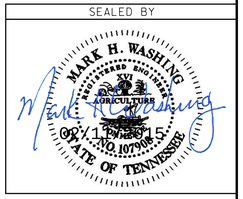

STATE OF TENNESSEE
DEPARTMENT OF TRANSPORTATION

CABLE MANAGEMENT DETAILS

N.T.S.

2/10/2015 10:57:54 PM
Q:\2807115\+\ITS\CableMgmt.sht