CONST. NO.	19005-3161-44	
PROJECT NO.	YEAR	SHEET NO.
BH-I-40-4(86)	2015	

REVISIONS

NO.	DATE	BY	BRIEF DESCRIPTION

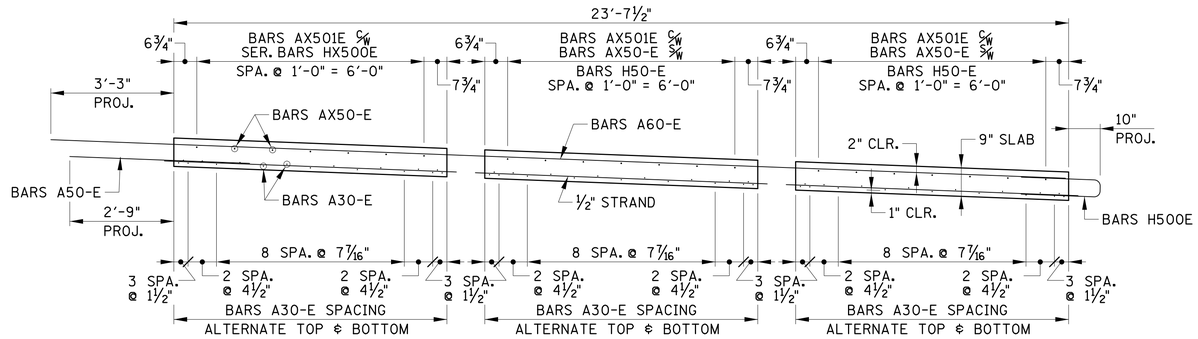

PANEL SECTION

(1 PANELS REQUIRED)

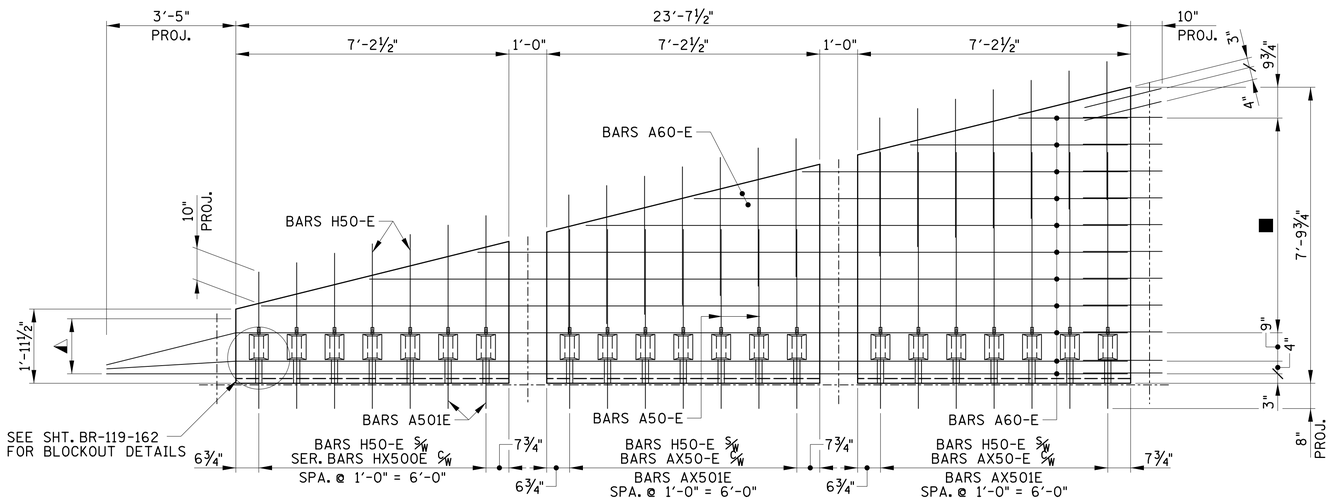

PANEL (TOP MAT)

■ DENOTES: BARS A60-E SPA. @ 8½" = 5'-8"
BARS H500E ⅝ BARS A60-E,
PLACE BARS H500E ON
LEFT SIDE OF A60-E BARS
(1'-3" EMBED., 10" PROJECT.)

◭ DENOTES: BARS A60-E (3'-5" PROJECT.)
FIELD BEND AS NECESSARY

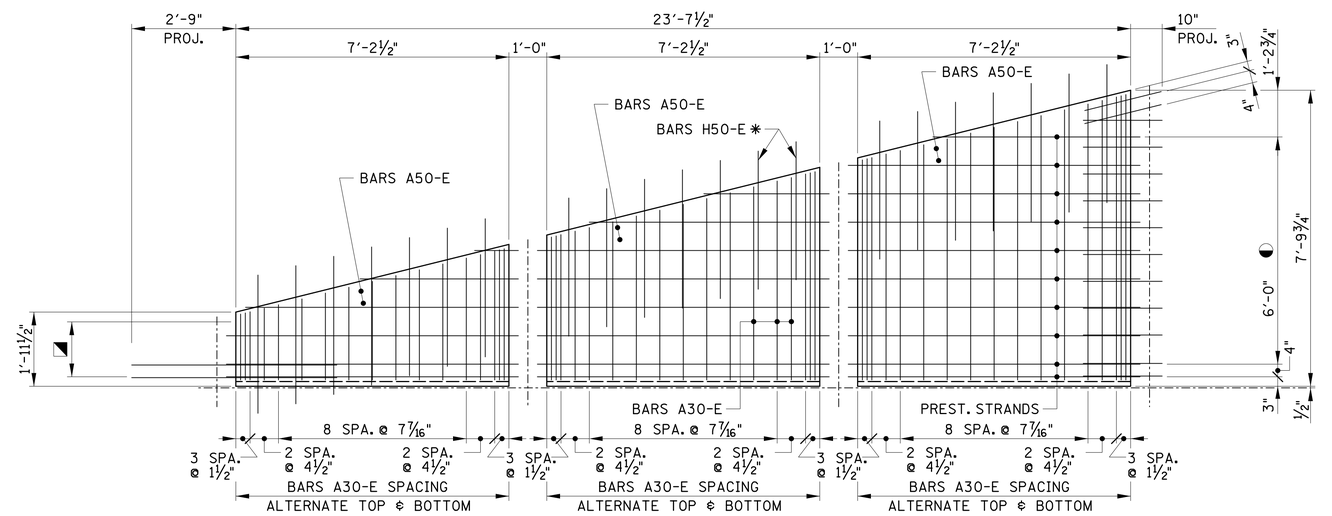

PANEL (BOTTOM MAT)

◑ DENOTES: ½" ø PRESTRESSING STRANDS
SPA. @ 9" = 6'-0", BARS H500E
SPACING WITH TOP MAT
(1'-3" EMBED., 10" PROJECT.)

✱ DENOTES: BARS H50-E SPACING WITH TOP MAT
(EMBED.VARIES, 10" PROJECT.)

◪ DENOTES: BARS A50-E ⅝ PRESTRESSING STRANDS
(2'-8" EMBED., 2'-9" PROJECT.)

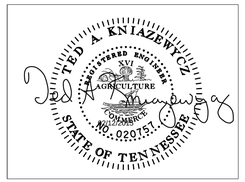

BRIDGE NO. 4

STATE OF TENNESSEE
DEPARTMENT OF TRANSPORTATION

PANEL F-5 DETAILS

I-40
OVER
JO JOHNSTON AVE.
BR. NO. 19-I0040-16.88
DAVIDSON COUNTY
2015

BR-119- 157

DESIGNED BY GRESHAM SMITH & PARTNERS DATE 2/09/2015
DRAWN BY R. PALMER DATE 1/2015
SUPERVISED BY T. KNIAZEWYCZ DATE 1/2015
CHECKED BY T. KNIAZEWYCZ DATE 2/2015

GRESHAM SMITH AND PARTNERS

knlazet
Q:\2807115\b\Bridge C Jo Johnston\bridge 1\8071b15cbis18.sht
2/13/2015
PRF