CONST. NO.	19005-3161-44	
PROJECT NO.	YEAR	SHEET NO.
BH-I-40-4(86)	2015	

REVISIONS

NO.	DATE	BY	BRIEF DESCRIPTION

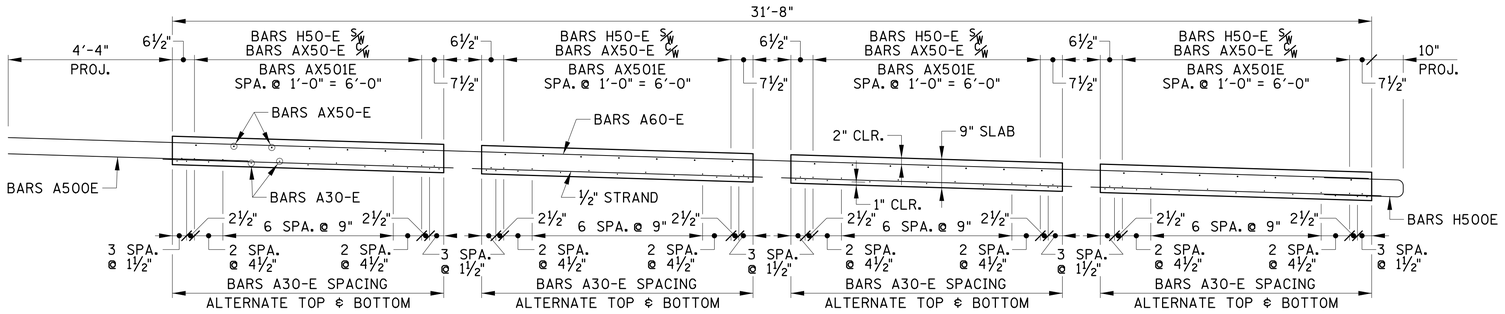

PANEL SECTION

(ONE (1) PANEL REQUIRED)

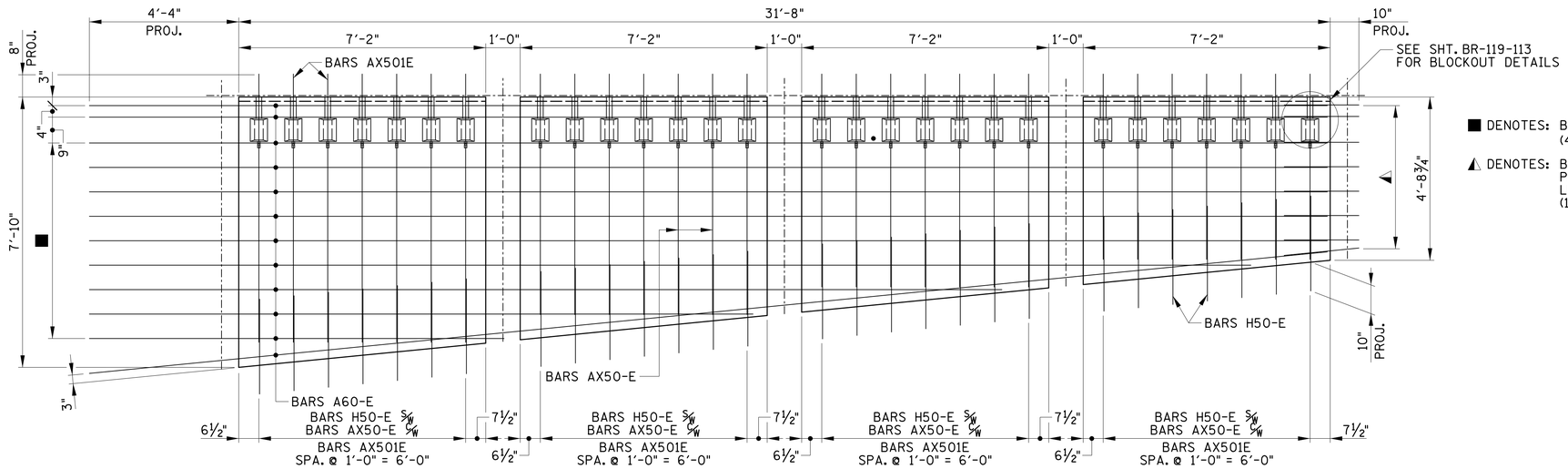

■ DENOTES: BARS A60-E SPA. @ 8½" = 5'-8" (4'-4" PROJECT.)

◭ DENOTES: BARS H500E ⅝ W BARS A60-E, PLACE BARS H500E ON LEFT SIDE OF A60-E BARS (1'-3" EMBED., 10" PROJECT.)

PANEL (TOP MAT)

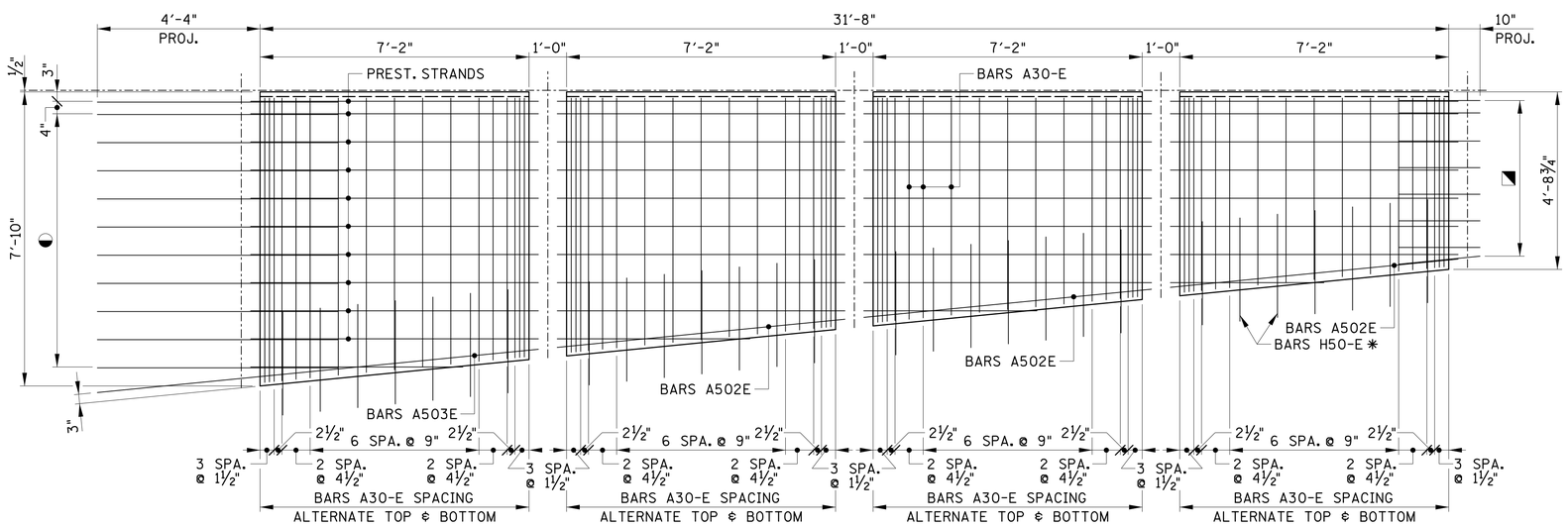

◑ DENOTES: ½" ø PRESTRESSING STRANDS SPA. @ 9" = 6'-9", BARS A500E ⅝ W PRESTRESSING STRANDS (2'-8" EMBED., 4'-4" PROJECT.)

✱ DENOTES: BARS H50-E SPACING WITH TOP MAT (EMBED.VARIES, 10" PROJECT.)

◪ DENOTES: BARS H500E SPACING WITH TOP MAT (1'-3" EMBED., 10" PROJECT.)

PANEL (BOTTOM MAT)

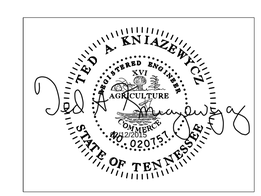

BRIDGE NO. 3

STATE OF TENNESSEE
DEPARTMENT OF TRANSPORTATION

PANEL A-1 DETAIL

I-40
OVER
CLINTON STREET
BR. NO. 19-I0040-16.75
DAVIDSON COUNTY
2015

DESIGNED BY	GRESHAM SMITH & PARTNERS	DATE	2/09/2015
DRAWN BY	R. PALMER	DATE	1/2015
SUPERVISED BY	T. KNIAZEWYCZ	DATE	1/2015
CHECKED BY	T. KNIAZEWYCZ	DATE	2/2015

GRESHAM SMITH AND PARTNERS

knlazet
Q:\2807115\b\Bridge B Clinton\bridge 2\8071b15b2s4.sht
2/13/2015
PRF