CONST. NO. 19005-3161-44

PROJECT NO.	YEAR	SHEET NO.
BH-I-40-4(86)	2015	

REVISIONS

NO.	DATE	BY	BRIEF DESCRIPTION

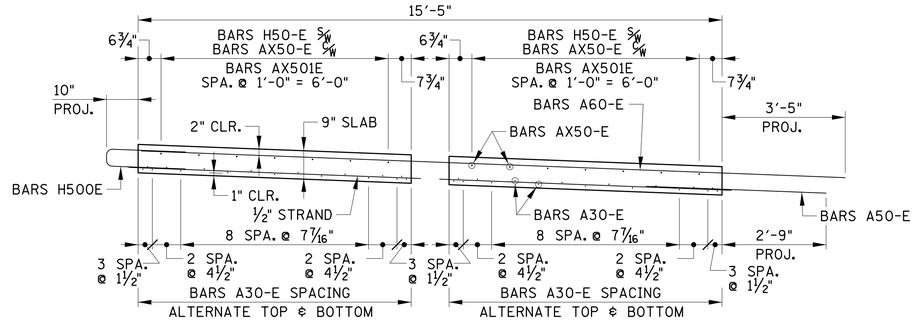

PANEL SECTION

(ONE (1) PANEL REQUIRED)

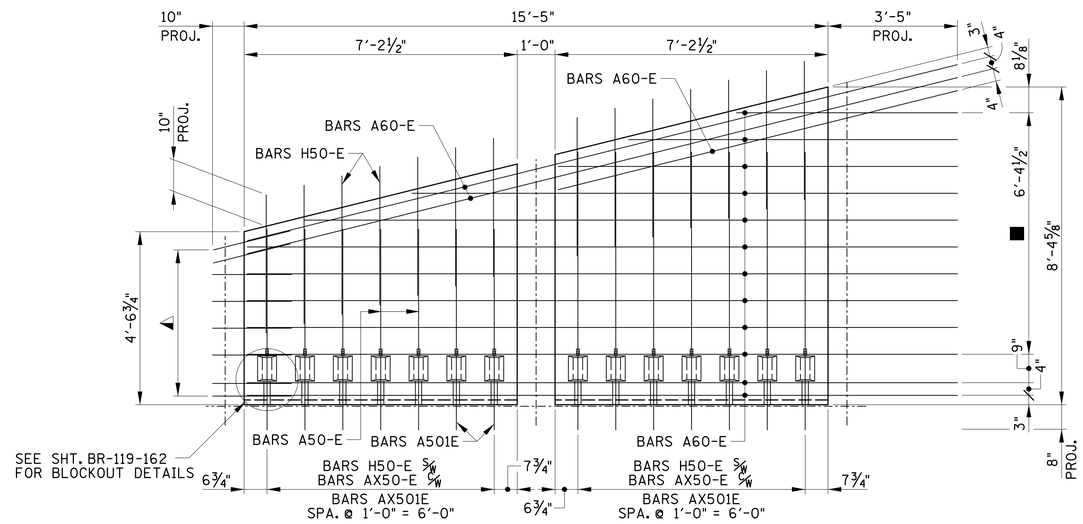

PANEL (TOP MAT)

■ DENOTES: BARS A60-E SPA. @ 8½" = 6'-4½" (3'-5" PROJECT.)

◭ DENOTES: BARS H500E ⅝W BARS A60-E, PLACE BARS H500E ON RIGHT SIDE OF A60-E BARS (1'-3" EMBED., 10" PROJECT.)

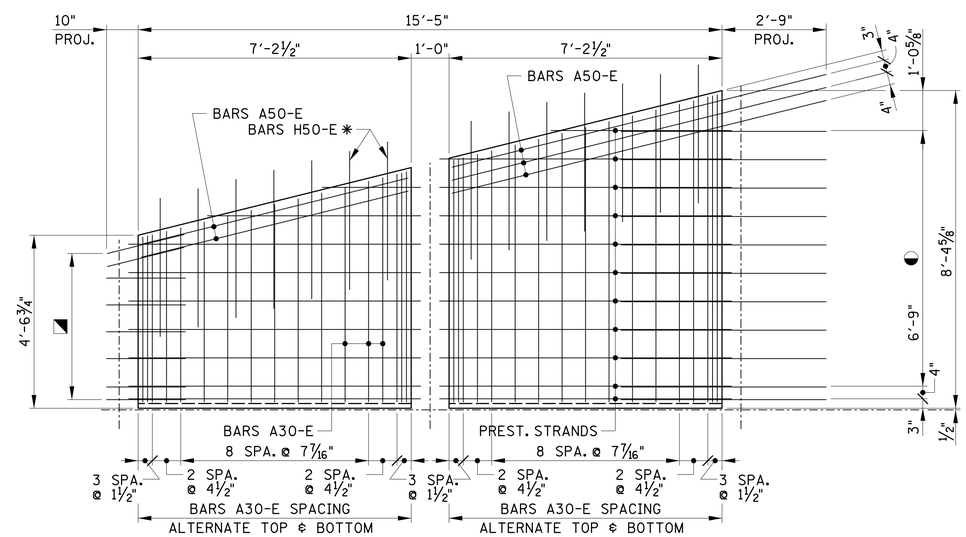

PANEL (BOTTOM MAT)

◑ DENOTES: ½" ø PRESTRESSING STRANDS SPA. @ 9" = 6'-9", BARS A50-E ⅝W PRESTRESSING STRANDS (2'-8" EMBED., 2-9" PROJECT.)

✱ DENOTES: BARS H50-E SPACING WITH TOP MAT (EMBED.VARIES, 10" PROJECT.)

◪ DENOTES: BARS H500E SPACING WITH TOP MAT (1'-3" EMBED., 10" PROJECT.)

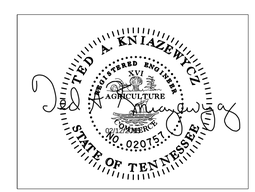

BRIDGE NO. 4

STATE OF TENNESSEE
DEPARTMENT OF TRANSPORTATION

PANEL F-4 DETAILS

I-40
OVER
JO JOHNSTON AVE.
BR. NO. 19-I0040-16.88
DAVIDSON COUNTY
2015

BR-119-156

DESIGNED BY GRESHAM SMITH & PARTNERS DATE 2/09/2015
DRAWN BY R. PALMER DATE 1/2015
SUPERVISED BY T. KNIAZEWYCZ DATE 1/2015
CHECKED BY T. KNIAZEWYCZ DATE 2/2015

GRESHAM SMITH AND PARTNERS

knlazet
Q:\2807115\b\Bridge C Jo Johnston\bridge 1\8071b15cb1s17a.sht
2/13/2015
PRF