CONST. NO.	19005-3161-44	
PROJECT NO.	YEAR	SHEET NO.
BH-I-40-4(86)	2015	

REVISIONS

NO.	DATE	BY	BRIEF DESCRIPTION

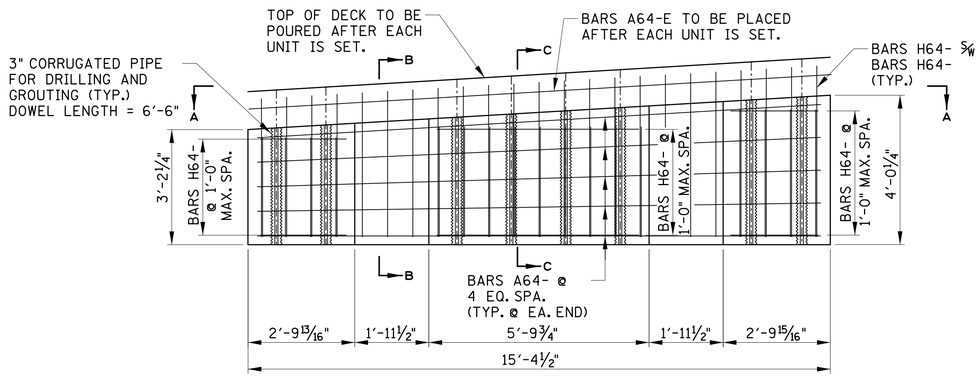

ELEVATION

LOOKING FORWARD ON SURVEY
(OUTSIDE BEAMS RIGHT OF SURVEY ℄)

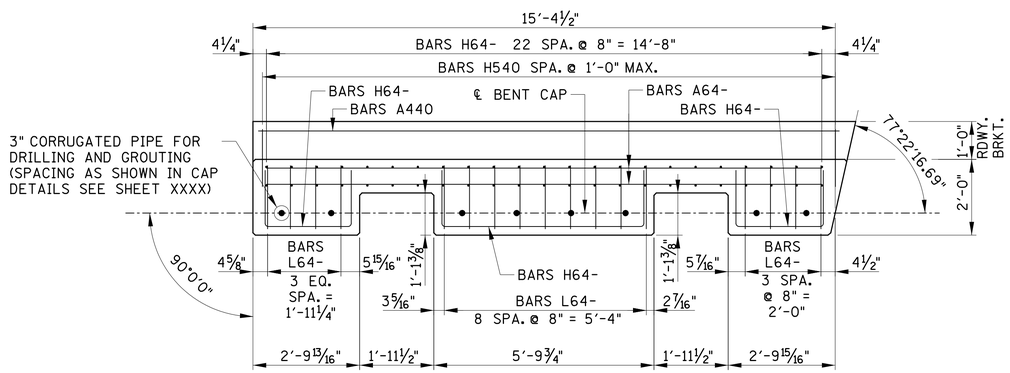

SECTION A-A

LOOKING FORWARD ON SURVEY

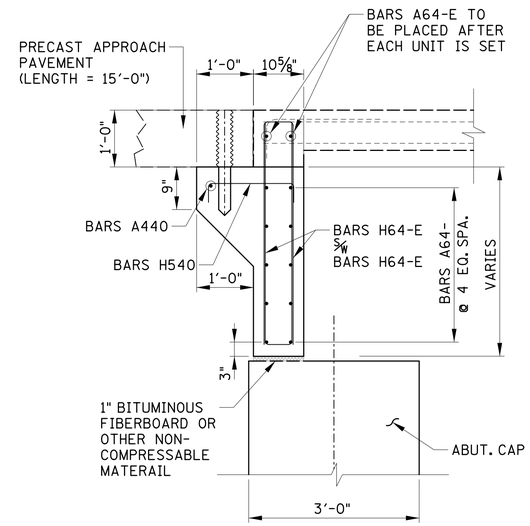

SECTION B-B

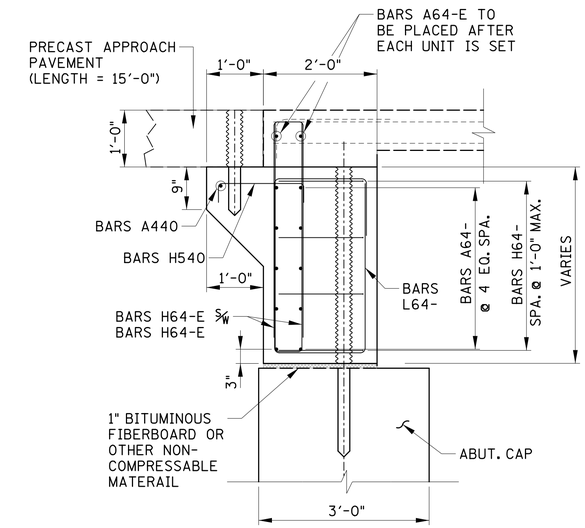

SECTION C-C

kniazet
Q:\2807115\b\Bridge D Charlotte\Bridge 1\8071b15dbla4.sht

2/12/2015
PRF

DESIGNED BY	GRESHAM SMITH & PARTNERS	DATE	2/09/2015
DRAWN BY	G.YOUNG	DATE	1/2015
SUPERVISED BY	T. KNIAZEWYCZ	DATE	1/2015
CHECKED BY	T. KNIAZEWYCZ	DATE	2/2015

GRESHAM SMITH AND PARTNERS

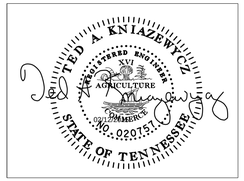

BRIDGE NO. 5
STATE OF TENNESSEE
DEPARTMENT OF TRANSPORTATION
ABUTMENT NOS. 1 & 2
ENDBLOCK DETAILS
I-40
OVER
CHARLOTTE AVE.
BR. NO. 19-I0040-17.09
DAVIDSON COUNTY
2015

BR-119- 197