CONST. NO.	19005-3161-44	
PROJECT NO.	YEAR	SHEET NO.
BH-I-40-4(86)	2015	

REVISIONS

NO.	DATE	BY	BRIEF DESCRIPTION

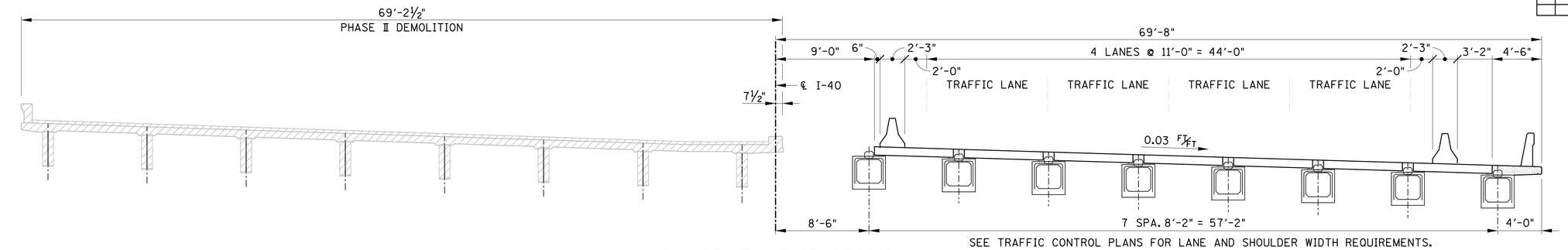

SEE TRAFFIC CONTROL PLANS FOR LANE AND SHOULDER WIDTH REQUIREMENTS.

PHASE II DEMOLITION

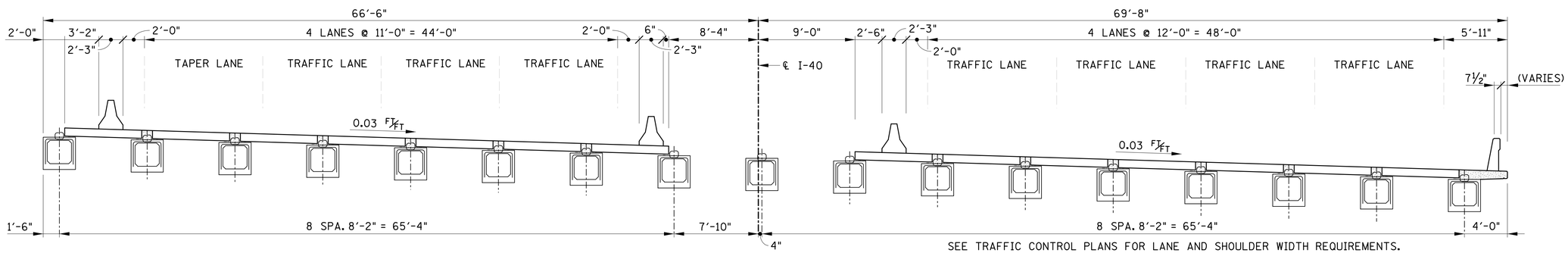

SEE TRAFFIC CONTROL PLANS FOR LANE AND SHOULDER WIDTH REQUIREMENTS.

PHASE II CONSTRUCTION

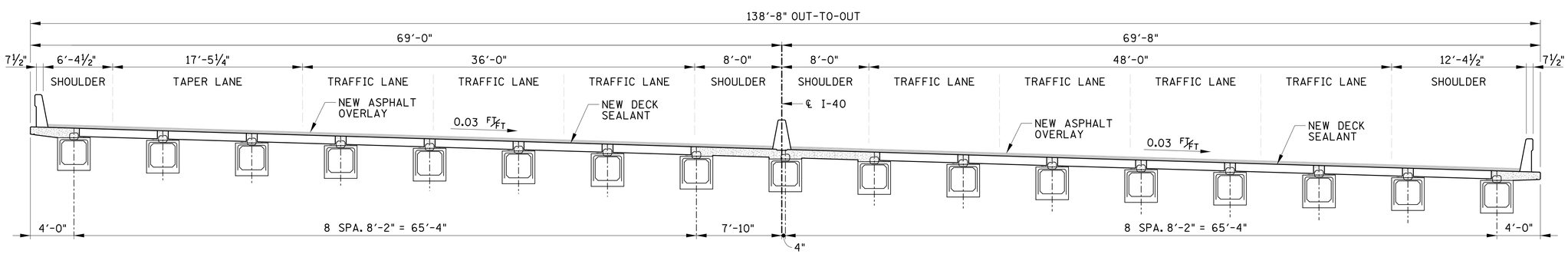

PROPOSED CROSS-SECTION

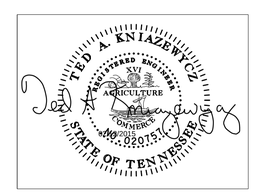

BRIDGE NO. 3
STATE OF TENNESSEE
DEPARTMENT OF TRANSPORTATION
CONSTRUCTION SEQUENCE
SHEET 2 OF 2
I-40
OVER
CLINTON STREET
BR. NO. 19-I0040-16.75
DAVIDSON COUNTY
2015

BR-119-88

DESIGNED BY	GRESHAM SMITH & PARTNERS	DATE	2/09/2015
DRAWN BY	R. PALMER	DATE	1/2015
SUPERVISED BY	T. KNIAZEWYCZ	DATE	1/2015
CHECKED BY	T. KNIAZEWYCZ	DATE	2/2015

GRESHAM SMITH AND PARTNERS

knlazet
Q:\2807115\b\Bridge B Clinton\bridge 2\8071b15b2c2.sht
2/13/2015
PRF