CONST. NO. 19005-3161-44

PROJECT NO.	YEAR	SHEET NO.
BH-I-40-4(86)	2015	

REVISIONS

NO.	DATE	BY	BRIEF DESCRIPTION
1	2/12/15	GS&P	UPDATED DETAILS TITLE

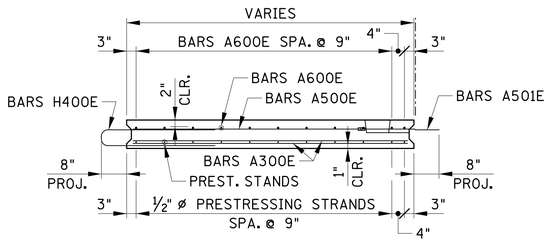

END PANELS CROSS-SECTION

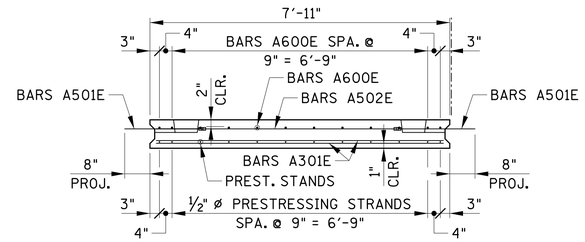

INTERMEDIATE PANELS CROSS-SECTION

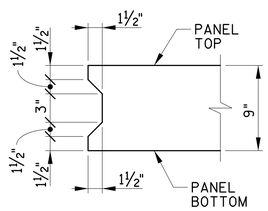

KEY WAY DETAIL

NOTE: THE KEY WAY FACE SHALL BE SAND-BLAST FINISHED PRIOR TO PLACING OF NON-SHRINK GROUT.

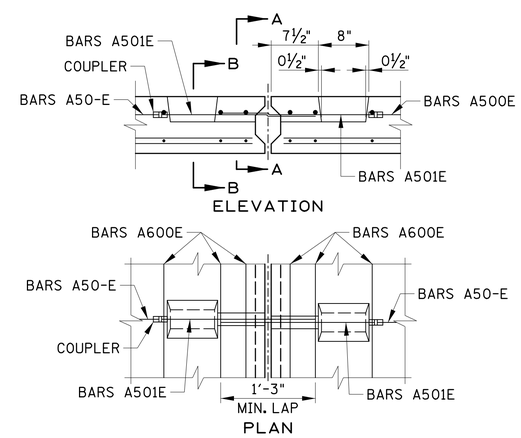

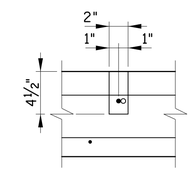

SECTION A-A

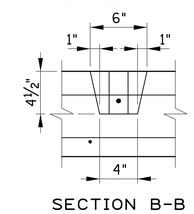

SECTION B-B

PANEL TO PANEL CONNECTION

(DETAIL SHOWING BLOCKOUT)

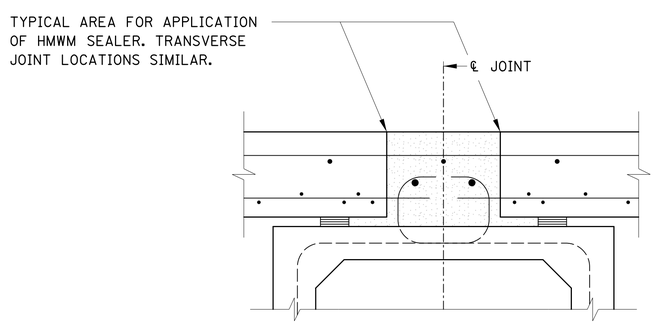

TYPICAL HMWM SEALER APPLICATION LOCATION

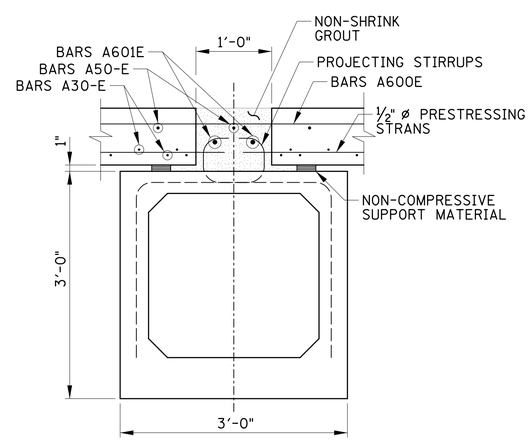

PANEL TO BEAM CONNECTION

NOTE: VERTICAL FACE OF SUPERSTRUCTURE UNITS SHALL BE ROUGHENED AT TIME OF CASTING BY CHEMICAL OR OTHER FORMING METHODS.

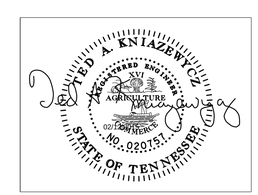

BRIDGE NO. 2

STATE OF TENNESSEE
DEPARTMENT OF TRANSPORTATION

PANEL DETAILS

I-40
OVER
CSX RAILROAD
BR. NO. 19-I0040-16.75
DAVIDSON COUNTY
2015

BR-119-71

knlazet
Q:\2807115\b\Bridge B Clinton\bridge 1\807lb15bls20.sht

2/12/2015
PRF

DESIGNED BY	GRESHAM SMITH & PARTNERS	DATE	2/09/2015
DRAWN BY	R. PALMER	DATE	1/2015
SUPERVISED BY	T. KNIAZEWYCZ	DATE	1/2015
CHECKED BY	T. KNIAZEWYCZ	DATE	2/2015

GS&P
GRESHAM SMITH AND PARTNERS