CONST. NO.	19005-3161-44	
PROJECT NO.	YEAR	SHEET NO.
BH-I-40-4(86)	2015	

REVISIONS

NO.	DATE	BY	BRIEF DESCRIPTION

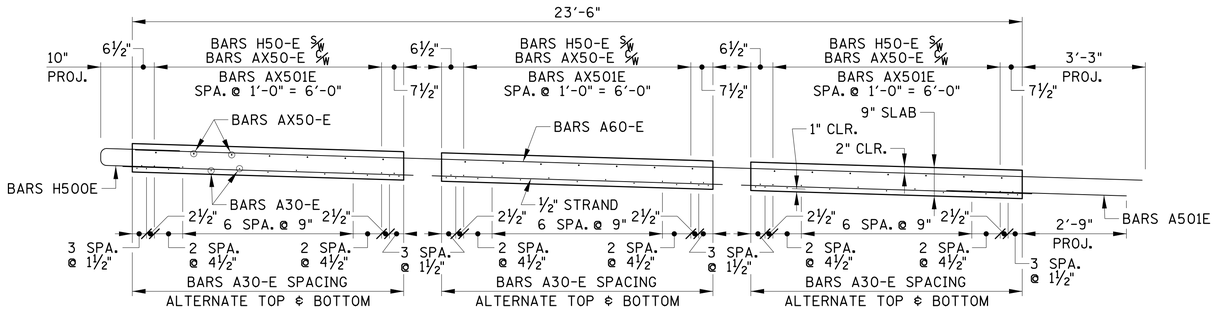

PANEL SECTION

(ONE (1) PANEL REQUIRED)

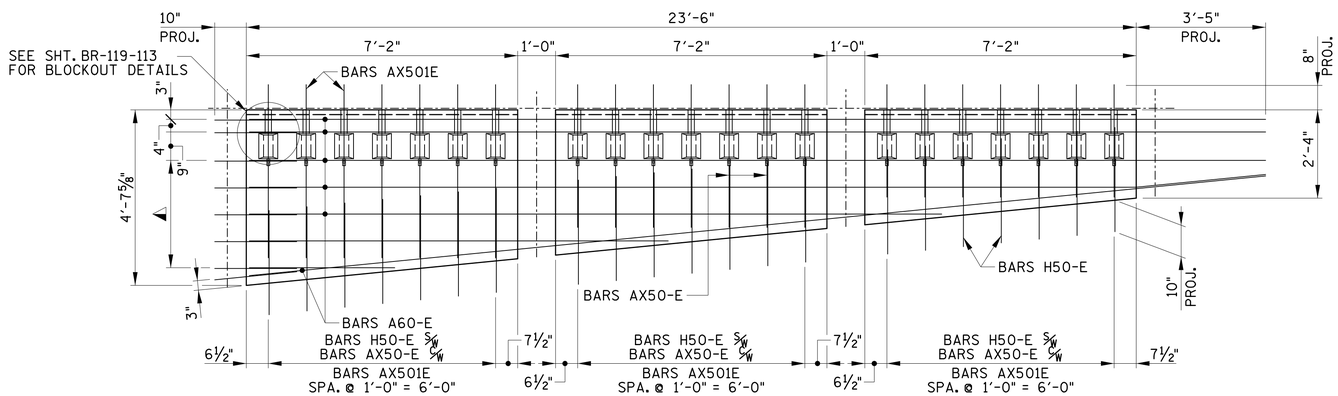

PANEL (TOP MAT)

◭ DENOTES: BARS H500E ⅝ BARS A600E SPA. @ 8½" = 2'-10". PLACE BARS H500E ON RIGHT SIDE OF A60-E BARS (1'-3" EMBED., 10" PROJECT.)

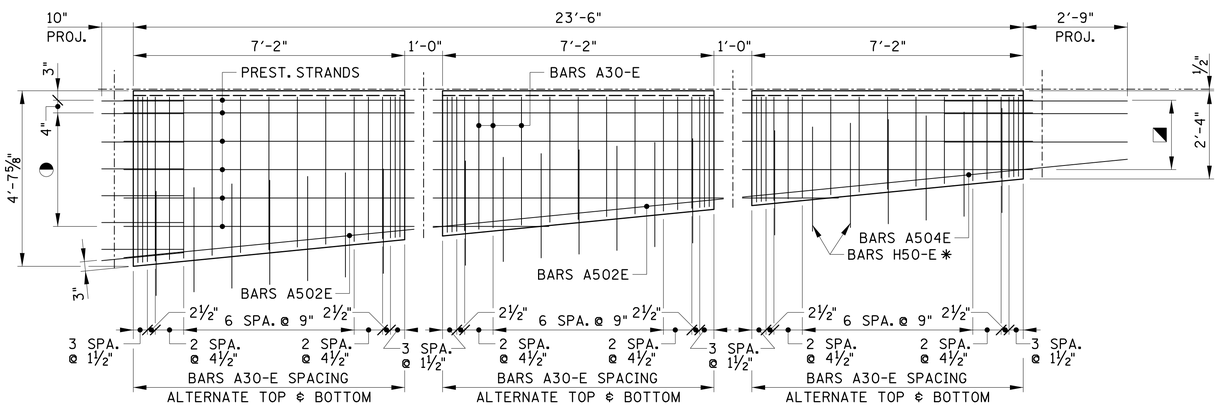

PANEL (BOTTOM MAT)

◑ DENOTES: ½" ø PRESTRESSING STRANDS SPA. @ 9" = 3'-0", BARS H500E SPACING WITH TOP MAP (1'-3" EMBED., 10" PROJECT.)

✱ DENOTES: BARS H50-E SPACING WITH TOP MAT (EMBED.VARIES, 10" PROJECT.)

◪ DENOTES: BARS A501E SPACING ⅝ PRESTRESSING STRANDS (2'-8" EMBED., 2'-9" PROJECT.)

BRIDGE NO. 3

STATE OF TENNESSEE
DEPARTMENT OF TRANSPORTATION

PANEL A-2 DETAILS

I-40
OVER
CLINTON STREET
BR. NO. 19-I0040-16.75
DAVIDSON COUNTY
2015

BR-119-94

kniazet
Q:\2807115\b\Bridge B Clinton\bridge 2\8071b15b2s5.sht

2/13/2015
PRF

DESIGNED BY	GRESHAM SMITH & PARTNERS	DATE	2/09/2015
DRAWN BY	R. PALMER	DATE	1/2015
SUPERVISED BY	T. KNIAZEWYCZ	DATE	1/2015
CHECKED BY	T. KNIAZEWYCZ	DATE	2/2015

GS&P
GRESHAM SMITH AND PARTNERS