CONST. NO. 19005-3161-44

PROJECT NO.	YEAR	SHEET NO.
BH-I-40-4(86)	2015	

REVISIONS

NO.	DATE	BY	BRIEF DESCRIPTION

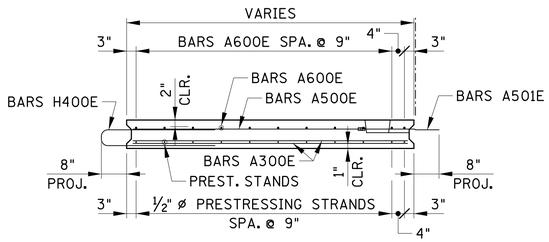

SECTION C-C (END PANEL)

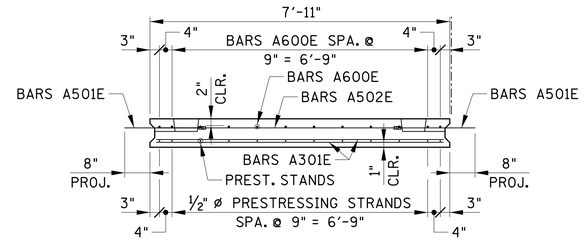

INTERMEDIATE PANELS CROSS-SECTION

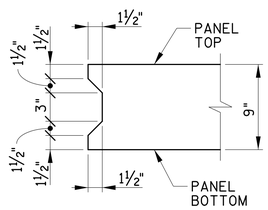

KEY WAY DETAIL

NOTE: THE KEY WAY FACE SHALL BE SAND-BLAST FINISHED PRIOR TO PLACING OF NON-SHRINK GROUT.

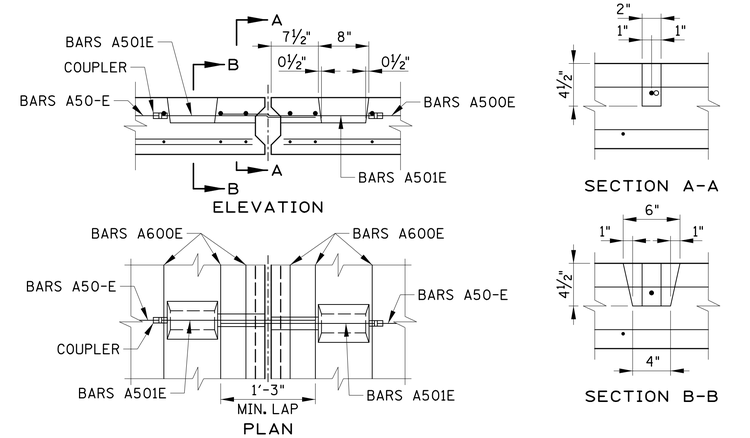

PANEL TO PANEL CONNECTION

(DETAIL SHOWING BLOCKOUT)

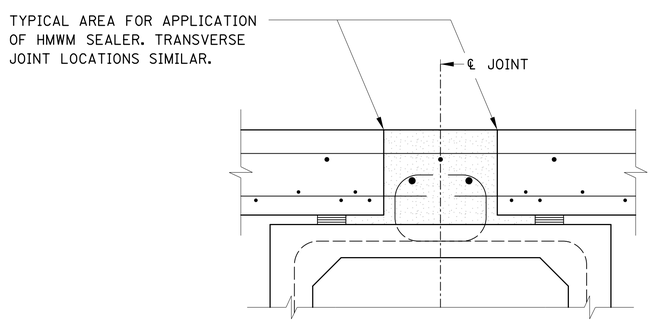

TYPICAL HMWM SEALER APPLICATION LOCATION

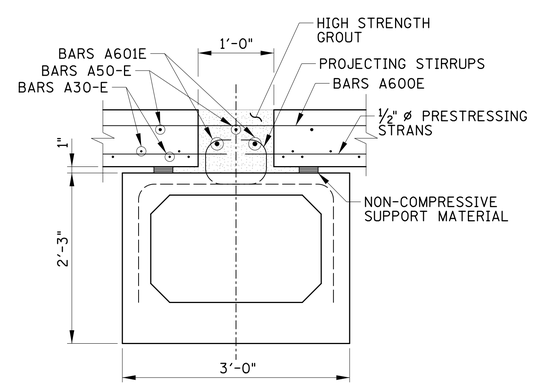

PANEL TO BEAM CONNECTION

NOTE: VERTICAL FACE OF SUPERSTRUCTURE UNITS SHALL BE ROUGHENED AT TIME OF CASTING BY CHEMICAL OR OTHER FORMING METHODS.

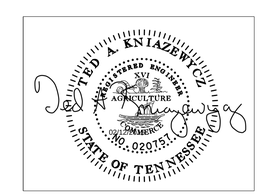

BRIDGE NO. 4

STATE OF TENNESSEE
DEPARTMENT OF TRANSPORTATION

PANEL DETAILS

I-40
OVER
JO JOHNSTON AVE.
BR. NO. 19-I0040-16.88
DAVIDSON COUNTY
2015

BR-119-162

DESIGNED BY GRESHAM SMITH & PARTNERS DATE 2/09/2015
DRAWN BY R. PALMER DATE 1/2015
SUPERVISED BY T. KNIAZEWYCZ DATE 1/2015
CHECKED BY T. KNIAZEWYCZ DATE 2/2015

GRESHAM SMITH AND PARTNERS

knlazet
Q:\2807115\b\Bridge C Jo Johnston\bridge 1\8071b15cbls20.sht
2/13/2015
PRF