CONST. NO.	19005-3161-44	
PROJECT NO.	YEAR	SHEET NO.
BH-I-40-4(86)	2015	

REVISIONS

NO.	DATE	BY	BRIEF DESCRIPTION

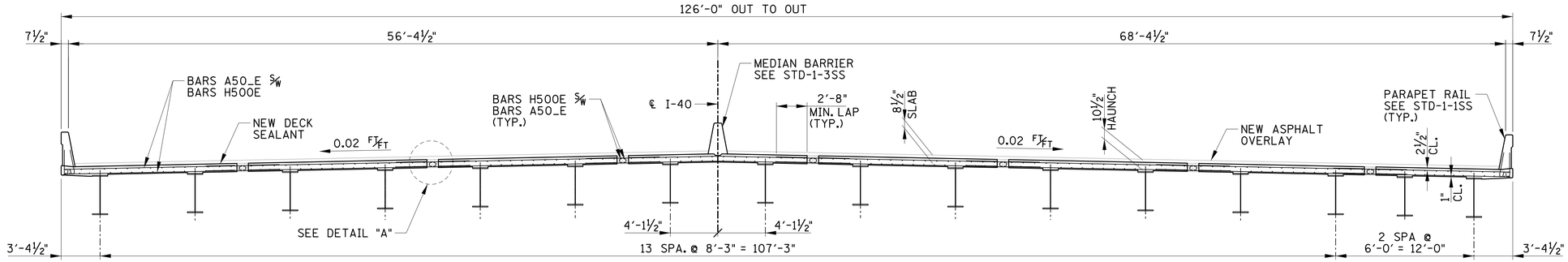

TYPICAL CROSS SECTION

NOTE: FOR BAR SPACINGS AND DESIGNATIONS SEE SUPERSTRUCTURE DETAILS UNIT LAYOUTS

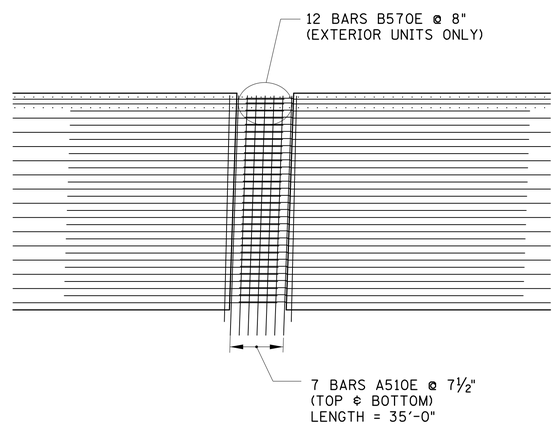

LINK SLAB CLOSURE POUR DETAIL

(4'-0" CLOSURE POUR WIDTH)

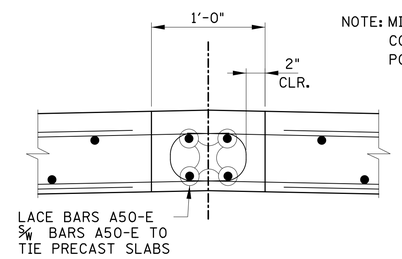

NOTE: MINIMUM ALLOWABLE TOP COVER FOR BARS IN CLOSURE POUR SHALL BE 1¾".

DETAIL "A"

NOTE: VERTICAL FACE OF SUPERSTRUCTURE UNITS SHALL BE ROUGHENED AT TIME OF CASTING BY CHEMICAL OR OTHER FORMING METHODS.

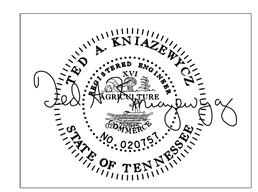

BRIDGE NO. 1

STATE OF TENNESSEE
DEPARTMENT OF TRANSPORTATION

SUPERSTRUCTURE DETAILS

I-40 OVER
HERMAN STREET
AND NWRR
BR. NO. 19-I0040-16.62
DAVIDSON COUNTY
2015

BR-119-07

DESIGNED BY	GRESHAM SMITH & PARTNERS	DATE	2/09/2015
DRAWN BY	G.YOUNG	DATE	1/2015
SUPERVISED BY	T. KNIAZEWYCZ	DATE	1/2015
CHECKED BY	T. KNIAZEWYCZ	DATE	2/2015

GRESHAM SMITH AND PARTNERS

knlazet
Q:\2807115\b\Bridge A Herman\Bridge 1\807lb15ab1s1.sht
2/12/2015
PRF