TYPE	YEAR	PROJECT NO.	SHEET NO.
CONST.	2015	BH-I-40-4(86)	42

LIGHTING SCOPE OF WORK

THE CONTRACTOR IS RESPONSIBLE FOR THE REMOVAL AND RE-INSTALLATION OF THE COMPLETE LIGHTING SYSTEM THROUGHOUT THIS PROJECT. THE PROJECT CONSIST OF THE UPGRADE OF FOUR BRIDGES ALONG I 40 AND MODIFICATIONS TO THE ROADWAY BETWEEN THE BRIDGES. THESE BRIDGES INCLUDE THE CHARLOTTE AVENUE BRIDGE, JO JOHNSON BRIDGE, CLINTON STREET BRIDGE AND THE HERMAN STREET BRIDGE ON THE WEST SIDE OF NASHVILLE. THE SCOPE OF WORK FOR THE LIGHTING CONTRACTOR IS TO REMOVE THE EXISTING I 40 ROADWAY LIGHTING FIXTURES, INSTALL NEW CONDUIT AND FOUNDATIONS AS SHOWN ON PLANS AND RE-INSTALL THE LIGHTING FIXTURES.

THE MAJORITY OF THE ROADWAY LIGHTING SYSTEM IS FED FROM A SERVICE DROP WITH PHOTOCELL NEAR THE INTERSECTION OF JO JOHNSON AVE AND GEORGE L DAVIS. THIS SERVICE POINT CONTROLS THE ROADWAY LIGHTING FIXTURES FROM APPROXIMATELY 400 FT NORTH OF HERMAN STREET BRIDGE TO THE CHARLOTTE AVE BRIDGE. IT ALSO INCLUDES THE LIGHTING ON THE ON AND OFF RAMPS AS WELL AS THE ROADWAY LIGHTING FIXTURES ON GEORGE L DAVIS FROM JOE JOHNSON AVE TO CHARLOTTE AND THE SOUTH LEG OF 12TH STREET FROM JO JOHNSON AVE. TO CHARLOTTE AVENUE UNDER BRIDGE LIGHTING WILL ALSO BE REMOVED AND NEW WALL-PACK FIXTURES INSTALLED ON THE NEW BRIDGES AS SHOWN IN PLANS.

THE EXISTING LIGHTING CONDUIT AND PULL BOXES ALONG JO JOHNSON WILL BE REMOVED AND REPLACED UNDER THE SIDEWALK AS SHOWN IN PLANS. THIS PORTION OF THE PROJECT SHALL BE COMPLETED EARLY IN THE PROJECT WITH THE SIDE WALK REPLACEMENT. ONCE THIS IS COMPLETE THE SIDE STREET LIGHTING SHALL BE CONNECTED AND MADE OPERATIONAL.

THE ROADWAY LIGHTING SYSTEM SHALL REMAIN IN OPERATION AS LONG AS POSSIBLE DURING CONSTRUCTION. THE LIGHTING SCHEDULE SHOULD SHOW THE LIGHT FIXTURES OPERATIONAL UNTIL THE NEED FOR THE ELECTRICAL SERVICE TO BE DISCONNECTED. AT THAT TIME THE CONTRACTOR SHALL WORK WITH NES FOR DISCONNECTING THE SERVICE FOR THE PROJECT. NO TEMPORARY ROADWAY LIGHTING WILL BE REQUIRED BY THE CONTRACTOR, HOWEVER IF TEMPORARY LIGHT FOR THE ROADWAY BECOME EVIDENT THEN THE CONTRACTOR SHALL SUBMIT A PLAN AND COST FOR THE TEMPORARY LIGHTING.

SEE TDOT STANDARD DRAWING T-L-1 FOR MORE DETAIL ON FOUNDATION DESIGN. THE BOLT PATTERN MUST MATCH EXISTING LIGHT POLE PATTERNS. EXISTING LIGHT POLE BOLT PATTERNS MAY VARY FROM POLE TO POLE.

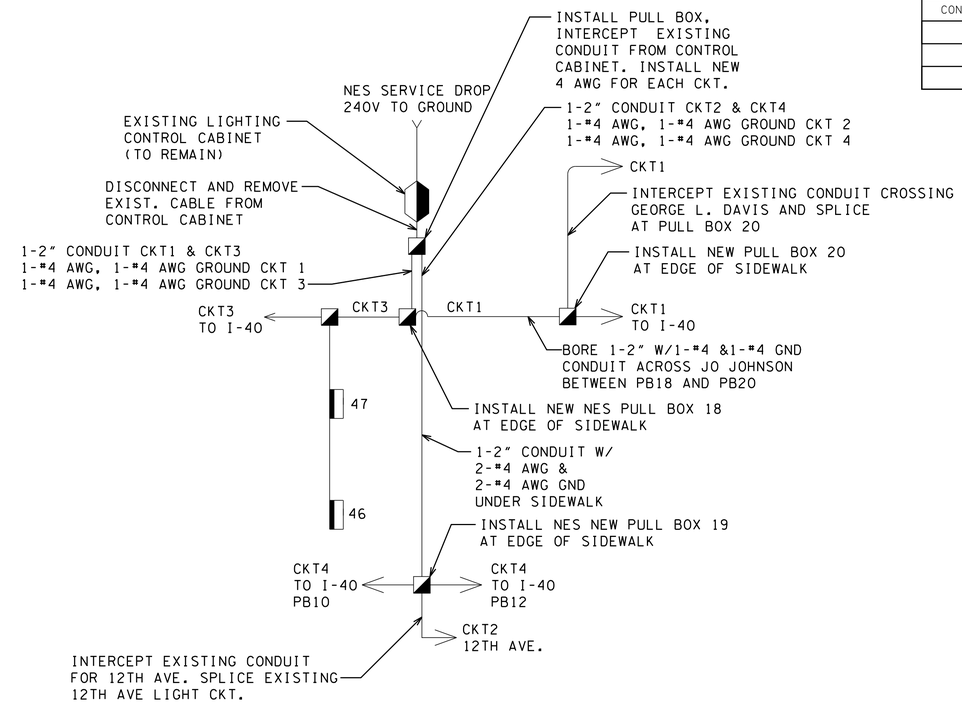

JO JOHNSON WIRING SCHEMATIC

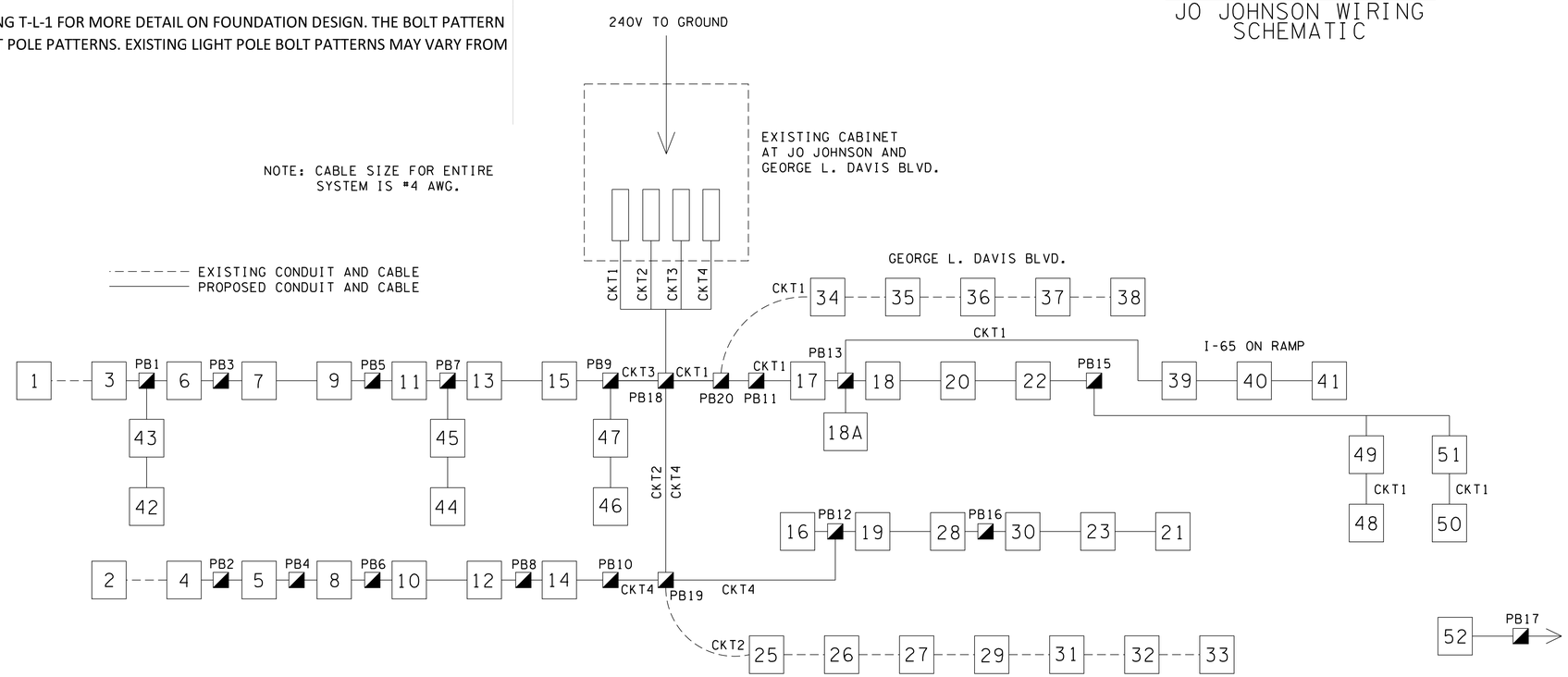

EXISTING WIRING SCHEMATIC

SEALED BY

STATE OF TENNESSEE
DEPARTMENT OF TRANSPORTATION

LIGHTING SCOPE & WIRING SCHEMATICS

2/10/2015 10:30:22 PM
0:\28071\5\+\Lighting\L05.sht