CONST. NO. 19005-3161-44		
PROJECT NO.	YEAR	SHEET NO.
BH-I-40-4(86)	2015	

REVISIONS

NO.	DATE	BY	BRIEF DESCRIPTION

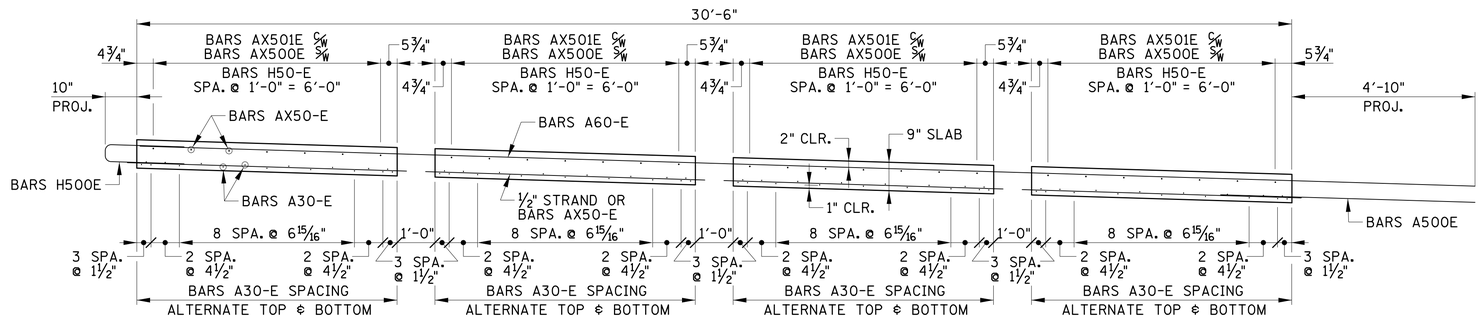

PANEL SECTION

(ONE (1) PANEL REQUIRED)

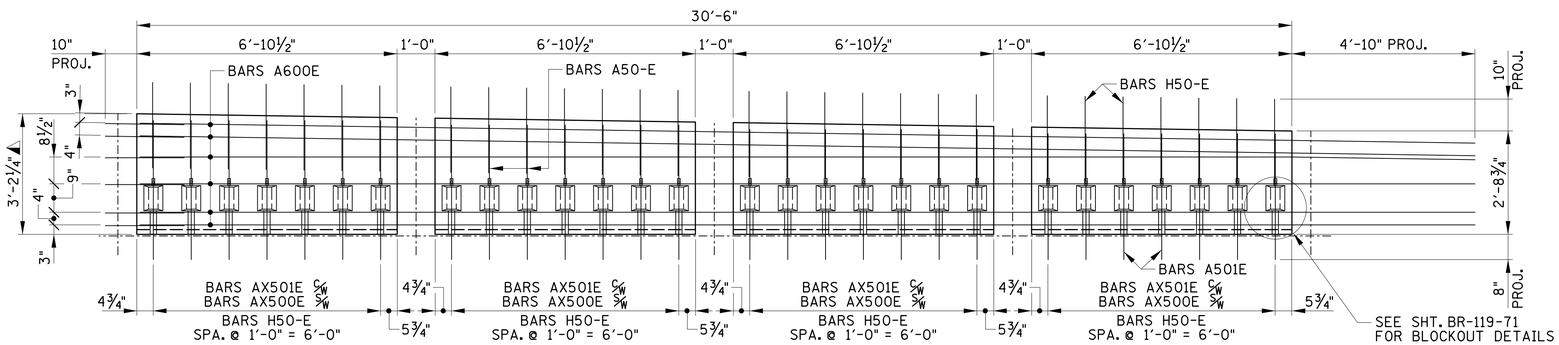

◭ DENOTES: PLACE BARS H500 ON RIGHT SIDE OF A600 BARS (1'-3" EMBED., 10" PROJECT.)

PANEL (TOP MAT)

◑ DENOTES: BARS A500E PACED WITH PRESTRESSING (2'-8" EMBED., 4'-10" PROJECT)

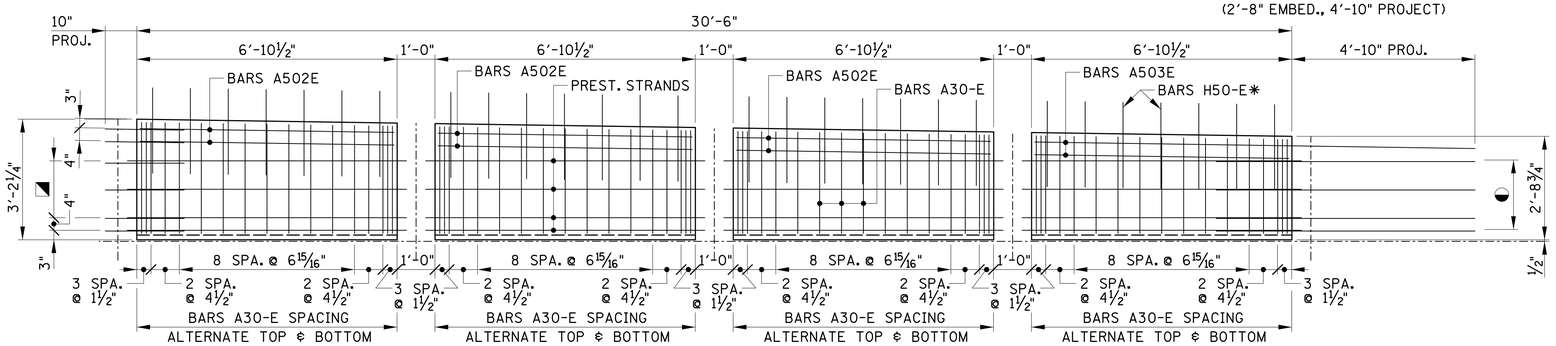

◪ DENOTES: ½" ø PRESTRESSING STRANDS, 9" = 1'-6" BARS H500E SPACING WITH TOP MAT (1'-3" EMBED., 10" PROJECT.)

PANEL (BOTTOM MAT)

* DENOTES: BARS H50-E SPACING WITH TOP MAT (EMBED.VARIES, 10" PROJECT.)

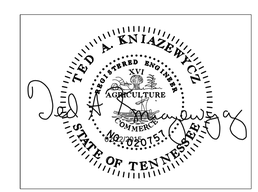

BRIDGE NO. 2

STATE OF TENNESSEE
DEPARTMENT OF TRANSPORTATION

PANEL D-4 DETAILS

I-40
OVER
CSX RAILROAD
BR. NO. 19-I0040-16.75
DAVIDSON COUNTY
2015

BR-119-70

DESIGNED BY GRESHAM SMITH & PARTNERS	DATE 2/09/2015	GRESHAM SMITH AND PARTNERS
DRAWN BY R. PALMER	DATE 1/2015	
SUPERVISED BY T. KNIAZEWYCZ	DATE 1/2015	
CHECKED BY T. KNIAZEWYCZ	DATE 2/2015	

knizet
Q:\2807115\b\Bridge B Clinton\bridge 1\807lb15b1s19.sht
2/12/2015
PRF