CONST. NO. 19005-3161-44

PROJECT NO.	YEAR	SHEET NO.
BH-I-40-4(86)	2015	

REVISIONS

NO.	DATE	BY	BRIEF DESCRIPTION

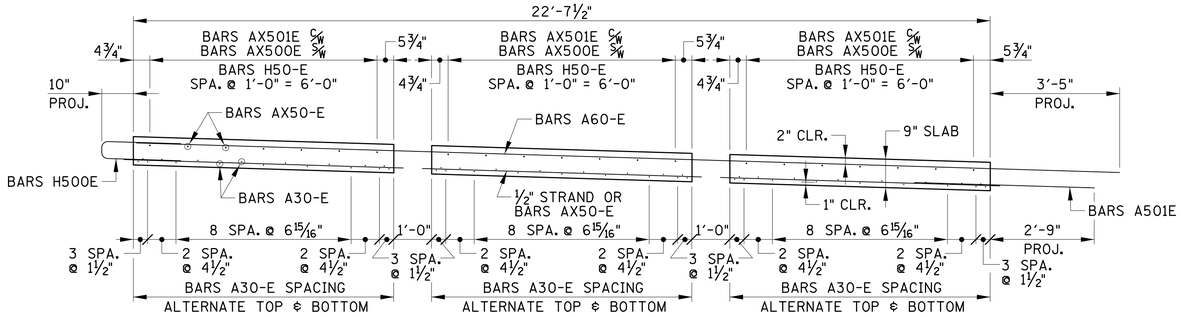

PANEL SECTION

(ONE (1) PANEL REQUIRED)

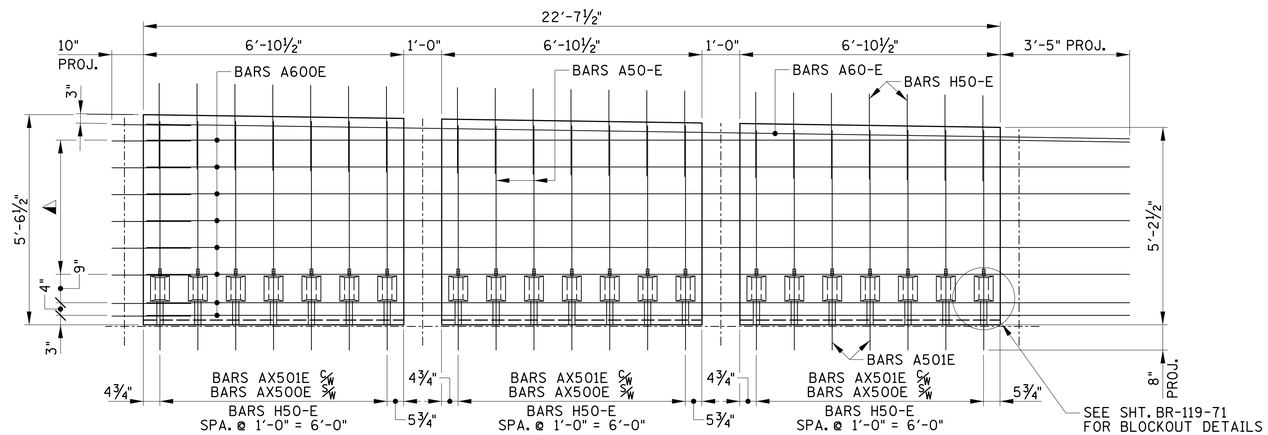

◭ DENOTES: BARS H500E ⅝W BARS A600E SPA. @ 8½" = 3'-6½". PLACE BARS H500 ON RIGHT SIDE OF A600 BARS (1'-3" EMBED., 10" PROJECT.)

PANEL (TOP MAT)

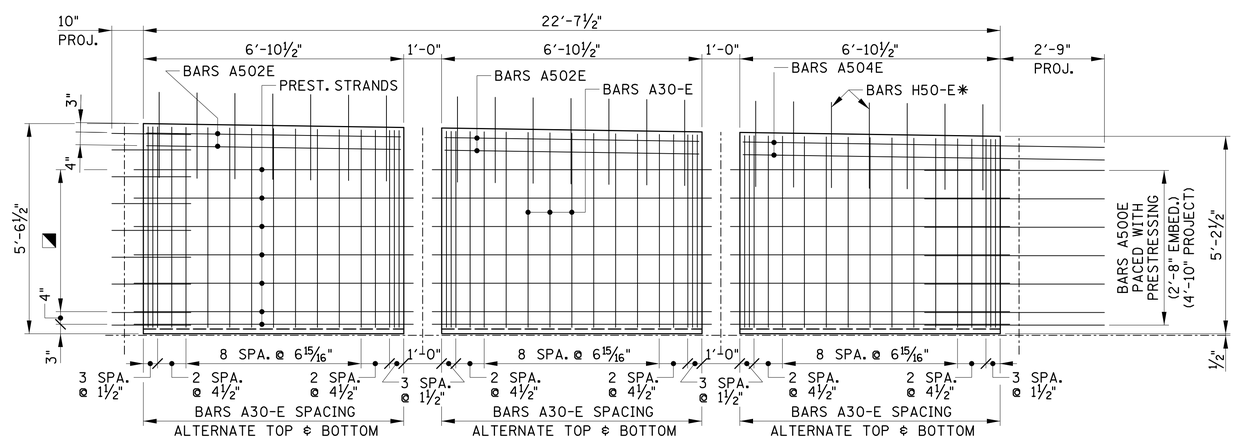

◪ DENOTES: ½" ø PRESTRESSING STRANDS, 9" = 3'-9" BARS H500E SPACING WITH TOP MAT (1'-3" EMBED., 10" PROJECT.)

PANEL (BOTTOM MAT)

✱ DENOTES: BARS H50-E SPACING WITH TOP MAT (EMBED.VARIES, 10" PROJECT.)

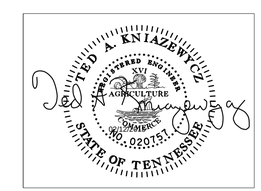

BRIDGE NO. 2

STATE OF TENNESSEE
DEPARTMENT OF TRANSPORTATION

PANEL D-2 DETAILS

I-40
OVER
CSX RAILROAD
BR. NO. 19-I0040-16.75
DAVIDSON COUNTY
2015

BR-119-68

DESIGNED BY GRESHAM SMITH & PARTNERS DATE 2/09/2015
DRAWN BY R. PALMER DATE 1/2015
SUPERVISED BY T. KNIAZEWYCZ DATE 1/2015
CHECKED BY T. KNIAZEWYCZ DATE 2/2015

GRESHAM SMITH AND PARTNERS

knizet
Q:\2807115\b\Bridge B Clinton\bridge 1\8071b15b1s17.sht
2/12/2015
PRF