CONST. NO.	19005-3161-44	
PROJECT NO.	YEAR	SHEET NO.
BH-I-40-4(86)	2015	

REVISIONS

NO.	DATE	BY	BRIEF DESCRIPTION

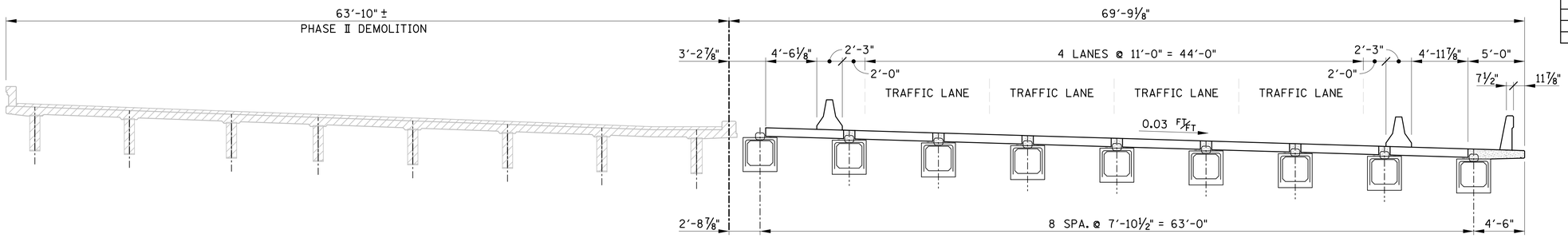

PHASE II DEMOLITION

SEE TRAFFIC CONTROL PLANS FOR LANE AND SHOULDER WIDTH REQUIREMENTS.

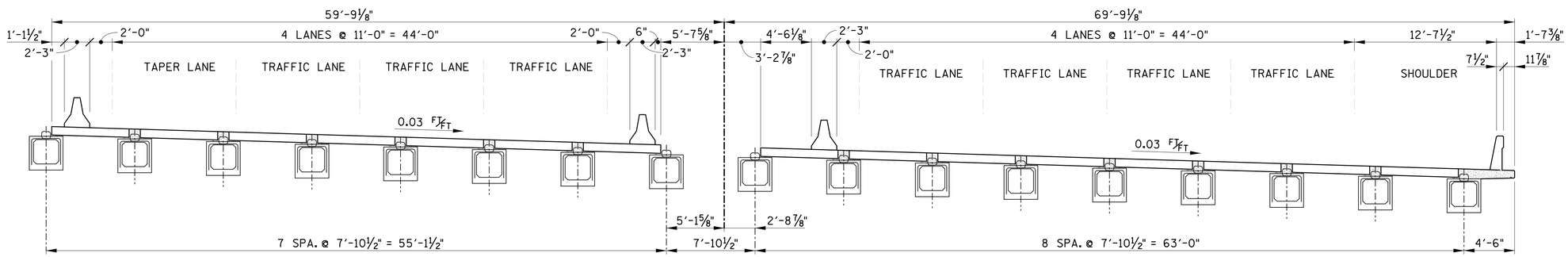

PHASE II CONSTRUCTION

SEE TRAFFIC CONTROL PLANS FOR LANE AND SHOULDER WIDTH REQUIREMENTS.

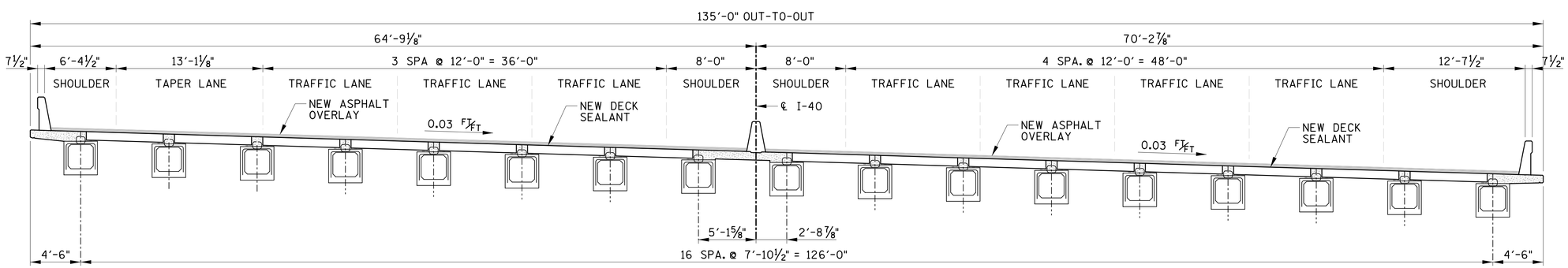

PROPOSED CROSS-SECTION

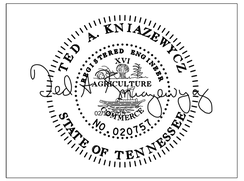

BRIDGE NO. 2

STATE OF TENNESSEE
DEPARTMENT OF TRANSPORTATION

CONSTRUCTION SEQUENCE
SHEET 2 OF 2
I-40
OVER
CSX RAILROAD
BR. NO. 19-I0040-16.75
DAVIDSON COUNTY
2015

BR-119-49

DESIGNED BY GRESHAM SMITH & PARTNERS	DATE 2/09/2015		
DRAWN BY R. PALMER	DATE 1/2015		
SUPERVISED BY T. KNIAZEWYCZ	DATE 1/2015		
CHECKED BY T. KNIAZEWYCZ	DATE 2/2015		

GS&P GRESHAM SMITH AND PARTNERS

kniazet
Q:\2807115\b\Bridge B Clinton\bridge 1\8071b15b1c2.sht
2/12/2015
PRF