TYPE	YEAR	PROJECT NO.	SHEET NO.
CONST.	2015	BH-I-40-4(86)	43H

JUNCTION F FIBER OPTIC TERMINATION CABINET JUMPER TABLE

FIBER OPTIC TERMINATION CABINET						FIBER OPTIC TERMINATION CABINET				ORIGIN	DESTINATION
CABLE	FDC	MODULE	PORT	CHANNEL	TO	CABLE	FDC	MODULE	PORT		
FJD-FJF	FJF-1	A	1	CHANNEL 8	=	FJF-FJH	FJF-2	A	1	TMC PORT 8	HUB-B PORT 8
FJD-FJF	FJF-1	A	2	CHANNEL 9	=	FJF-FJG	FJF-3	A	1	TMC PORT 9	HUB-B PORT 9
FJD-FJF	FJF-1	A	3	CHANNEL 10	=	FJF-FJG	FJF-3	A	2	TMC PORT 10	HUB-B PORT 10
FJD-FJF	FJF-1	A	4	Gbit-3	=	FJF-FJH	FJF-2	A	2	TMC GBIC-1 PORT 3	HUBA GBIC-1 PORT 3
FJD-FJF	FJF-1	B	1	CHANNEL 7	=	FJF-FJG	FJF-3	A	4		
FJF-FJH	FJF-2	A	4	CHANNEL 30	=	FJF-FJG	FJF-3	A	3	HUBB PORT 20	HUBA PORT 20

CONTRACTOR TO COORDINATE WITH TDOT REGION 3 TMC BEFORE CUTTING AND PULLING BACK FIBER ON SYSTEM

=	DUPLEX JUMPER
X	DUPLEX JUMPER CROSS CONNECT

FIBER COLOR STANDARD

AQ	AQUA	RS	ROSE
BK	BLACK	SL	SLATE
BL	BLUE	VI	VIOLET
BR	BROWN	WH	WHITE
GR	GREEN	YL	YELLOW
OR	ORANGE	RD	RED

LEGEND

- FO CABLE
- FO BUFFER
- FO FIBER
- FUSION SPLICE
- UNTERMINATED FIBER(S) OR BUFFER(S)

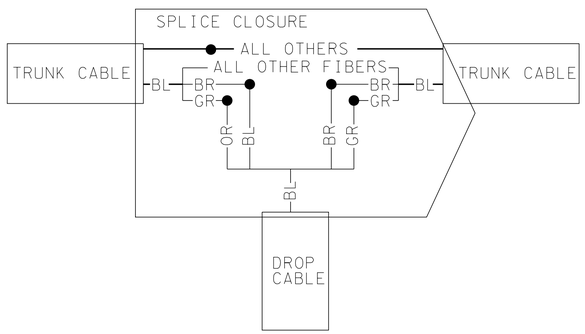

SPLICE DETAIL FOR DEMARC #54

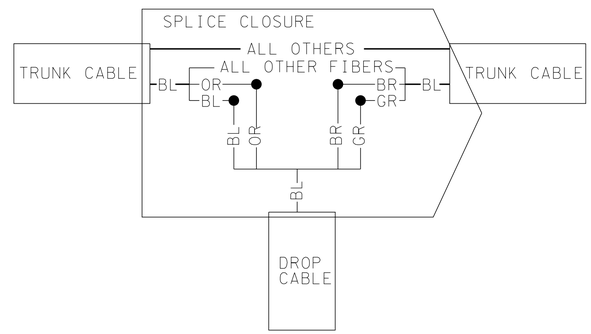

SPLICE DETAIL FOR DEMARC #55

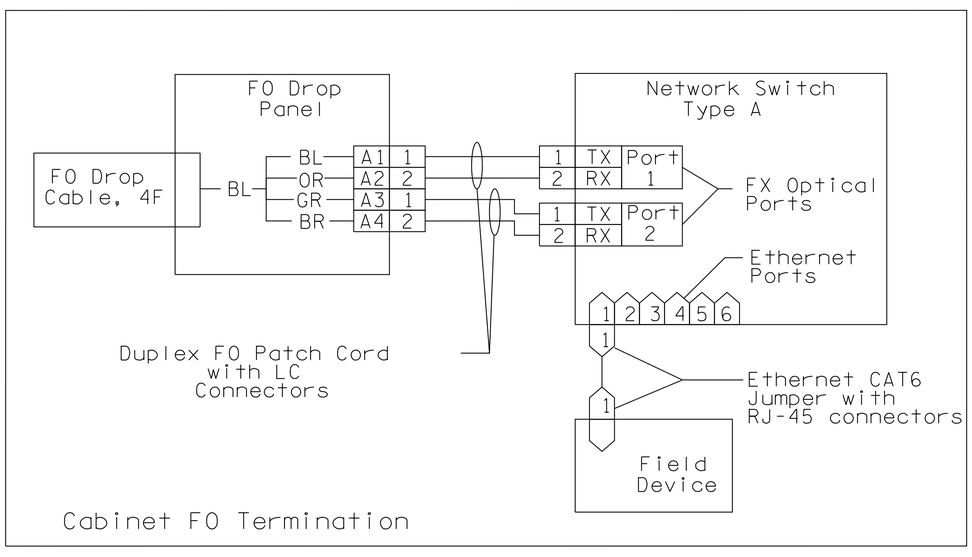

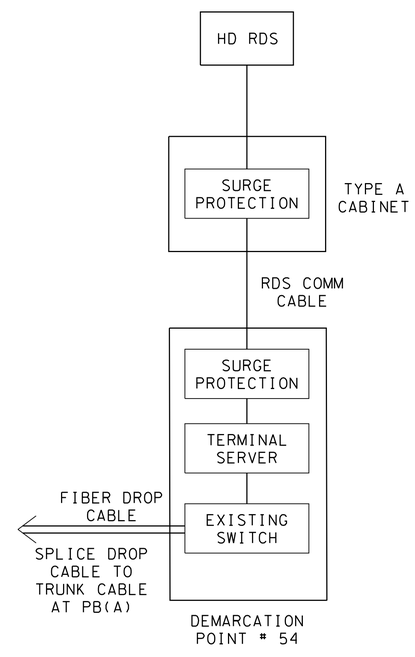

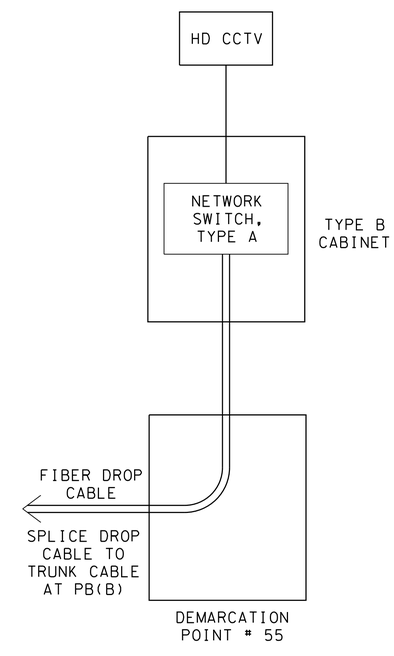

SEALED BY

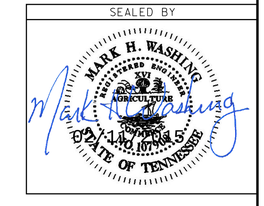

STATE OF TENNESSEE
DEPARTMENT OF TRANSPORTATION

FIBER OPTIC JUMPER TABLES

N.T.S.

2/10/2015 10:57:57 PM
Q:\2807115\+\ITS\JumperTables.sht