CONST. NO. 19005-3161-44

PROJECT NO.	YEAR	SHEET NO.
BH-I-40-4(86)	2015	

REVISIONS

NO.	DATE	BY	BRIEF DESCRIPTION
1	2/12/15	GSP	UPDATED BEARING LINE DIMENSIONS

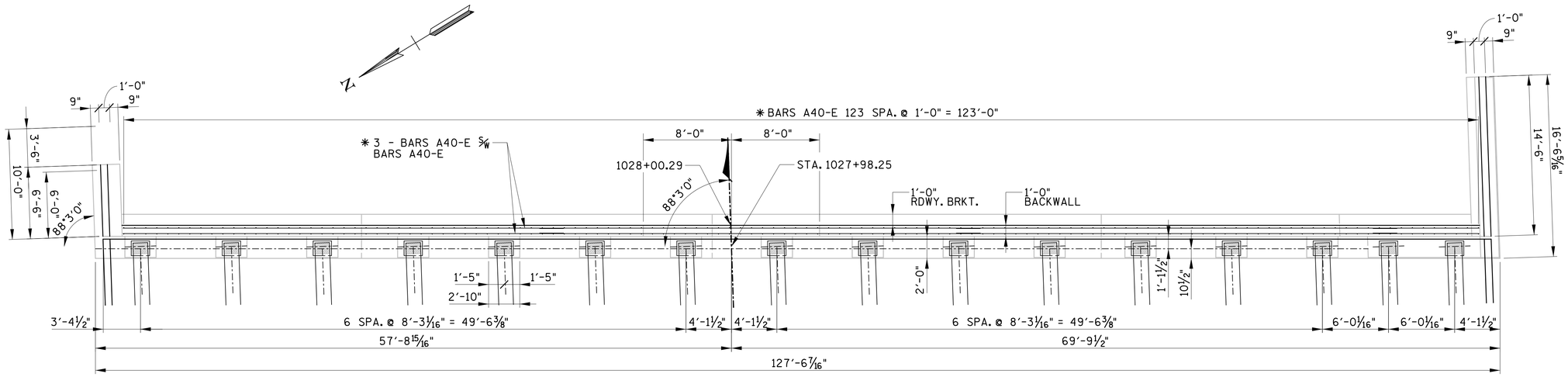

1 PROPOSED PLAN

(LOOKING FORWARD ON SURVEY)
✱ NOTE: FIELD CUT BARS

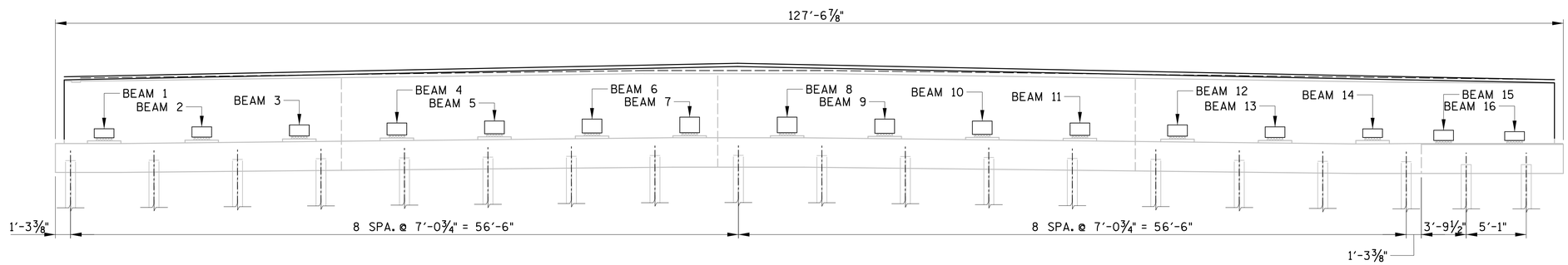

ELEVATION

(LOOKING FORWARD ON SURVEY)

NOTE: PROPOSED ELEVATIONS ARE TO THE TOP OF SHIM PLATE STACK/BOTTOM OF FLANGE

NOTE; DIMENSIONS AND ELEVATIONS ARE TAKEN FROM EXISTING PLANS AND SURVEY DATA OBTAINED BY WILSON & ASSOCIATES. CONTRACTOR SHALL FIELD VERIFY ALL INFORMATION PRIOR TO FABRICATION AND DEMOLITION. SEE EXISTING PLANS FOR TYPICAL DIMENSIONS.

ABUTMENT NO. 2	BEAM 1	BEAM 2	BEAM 3	BEAM 4	BEAM 5	BEAM 6	BEAM 7	BEAM 8	BEAM 9	BEAM 10	BEAM 11	BEAM 12	BEAM 13	BEAM 14	BEAM 15	BEAM 16
BOTTOM OF BEAM EL.	455.63	455.79	455.95	456.10	456.27	456.42	456.59	456.58	456.40	456.24	456.06	455.89	455.72	455.55	455.43	455.30
SHIM HEIGHT (INCHES)	7 1/2	8 3/4	9 3/8	10 1/4	11 1/8	12	13 7/8	13 3/4	12 1/8	11 3/8	10 1/8	9	8 1/4	7 1/2	7 7/8	6 1/4

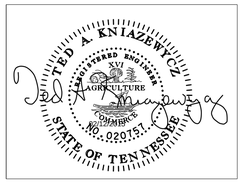

BRIDGE NO. 1
STATE OF TENNESSEE
DEPARTMENT OF TRANSPORTATION
ABUTMENT NO. 2
PROPOSED ELEVATIONS
I-40 OVER
HERMAN STREET
AND NWRR
BR. NO. 19-I0040-16.62
DAVIDSON COUNTY
2015

BR-119-35

DESIGNED BY GRESHAM SMITH & PARTNERS DATE 2/09/2015
DRAWN BY G.YOUNG DATE 1/2015
SUPERVISED BY T. KNIAZEWYCZ DATE 1/2015
CHECKED BY T. KNIAZEWYCZ DATE 2/2015

GRESHAM SMITH AND PARTNERS

knlazet
Q:\2807115\b\Bridge A Herman\Bridge 1\8071b15ab1a2a.sht
2/12/2015
PRF