CONST. NO. 19005-3161-44		
PROJECT NO.	YEAR	SHEET NO.
BH-I-40-4(86)	2015	

REVISIONS

NO.	DATE	BY	BRIEF DESCRIPTION

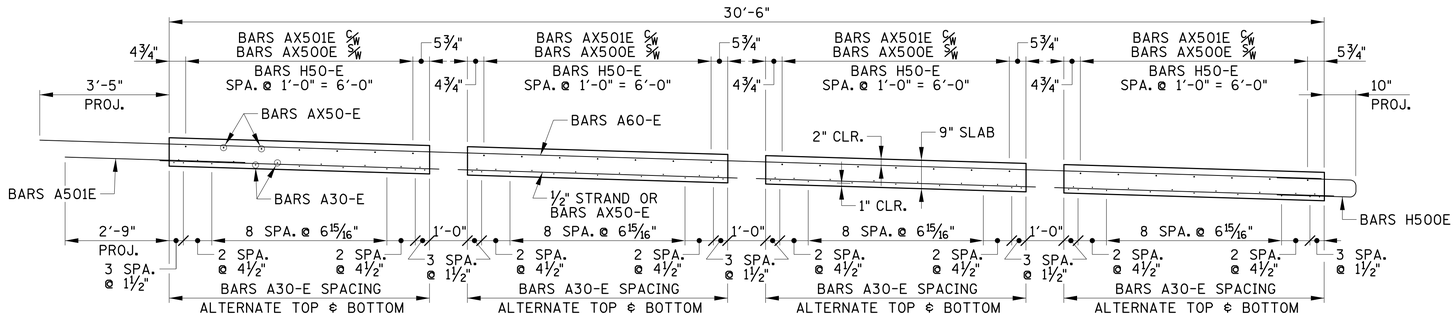

PANEL SECTION

(ONE (1) PANEL REQUIRED)

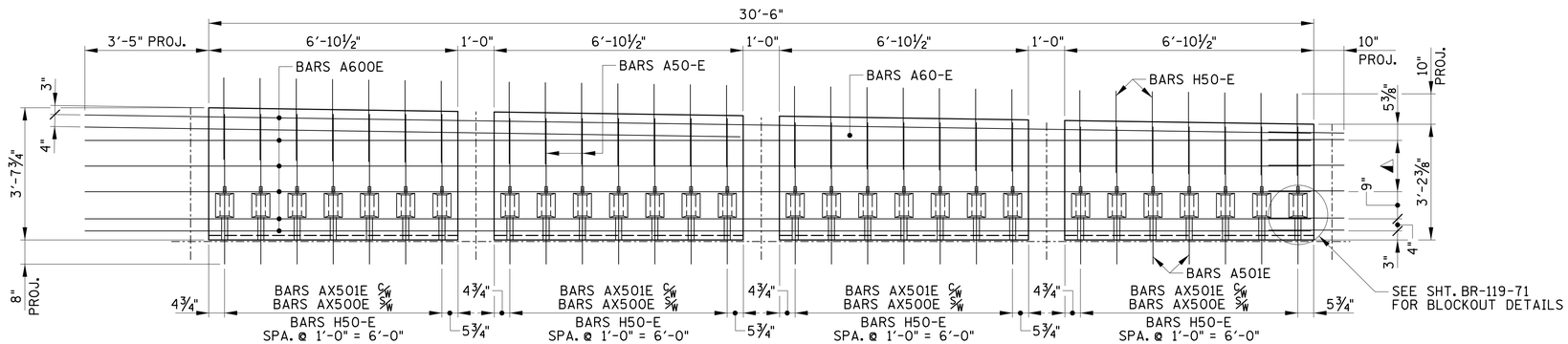

PANEL (TOP MAT)

◭ DENOTES: BARS H500E ⅝W BARS A600E SPA. @ 8½" = 1'-5". PLACE BARS H500 ON LEFT SIDE OF A600 BARS (1'-3" EMBED., 10" PROJECT.)

◑ DENOTES: BARS A500E PACED WITH PRESTRESSING (2'-8" EMBED., 2'-9" PROJECT)

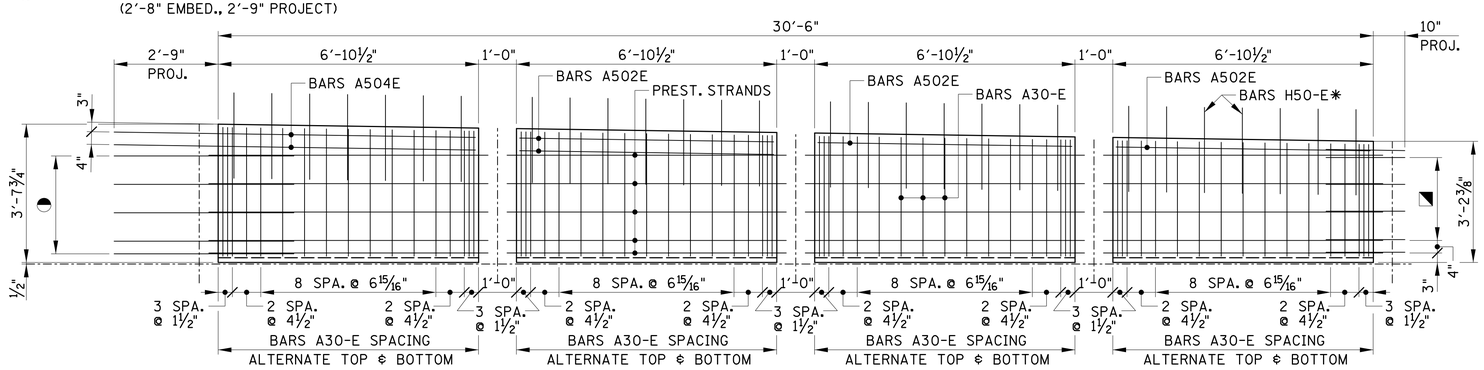

✱ DENOTES: BARS H50-E SPACING WITH TOP MAT (EMBED.VARIES, 10" PROJECT.)

PANEL (BOTTOM MAT)

◪ DENOTES: ½" ø PRESTRESSING STRANDS, 9" = 2'-3" BARS H500E SPACING WITH TOP MAT (1'-3" EMBED., 10" PROJECT.)

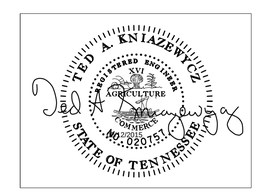

BRIDGE NO. 2

STATE OF TENNESSEE
DEPARTMENT OF TRANSPORTATION

PANEL D-3 DETAILS

I-40
OVER
CSX RAILROAD
BR. NO. 19-I0040-16.75
DAVIDSON COUNTY
2015

BR-119-69

DESIGNED BY GRESHAM SMITH & PARTNERS DATE 2/09/2015
DRAWN BY R. PALMER DATE 1/2015
SUPERVISED BY T. KNIAZEWYCZ DATE 1/2015
CHECKED BY T. KNIAZEWYCZ DATE 2/2015

GRESHAM SMITH AND PARTNERS

kniazet
Q:\2807115\b\Bridge B Clinton\bridge 1\8071b15bis18.sht
2/12/2015
PRF