CONST. NO. 19005-3161-44

PROJECT NO.	YEAR	SHEET NO.
BH-I-40-4(86)	2015	

REVISIONS

NO.	DATE	BY	BRIEF DESCRIPTION

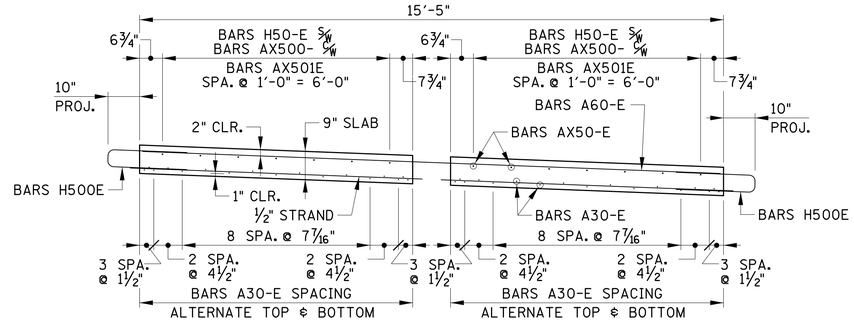

PANEL SECTION

(ONE (1) PANEL REQUIRED)

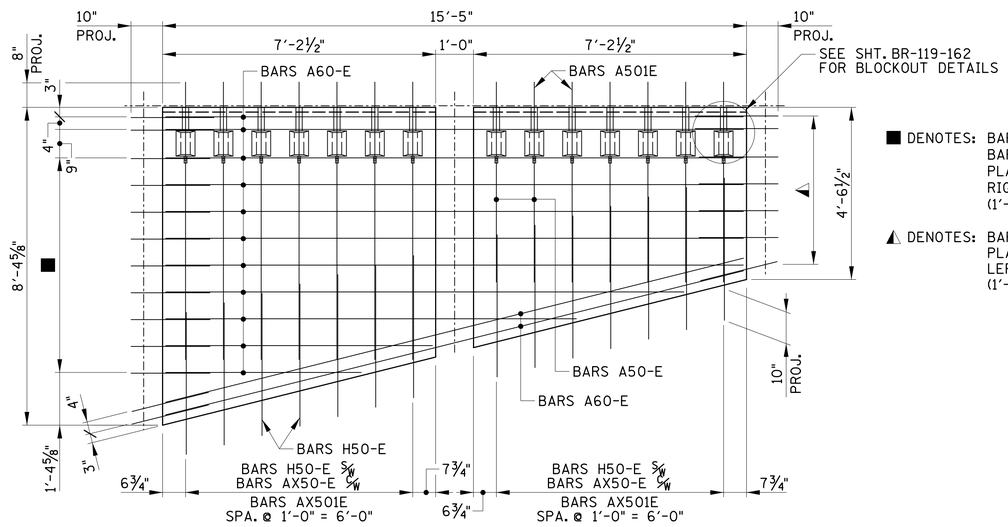

■ DENOTES: BARS A60-E SPA. @ 8½" = 5'-8"
BARS H500E BARS A60-E,
PLACE BARS H500E ON
RIGHT SIDE OF A60-E BARS
(1'-3" EMBED., 10" PROJECT.)

◭ DENOTES: BARS H500E BARS A60-E,
PLACE BARS H500E ON
LEFT SIDE OF A60-E BARS
(1'-3" EMBED., 10" PROJECT.)

PANEL (TOP MAT)

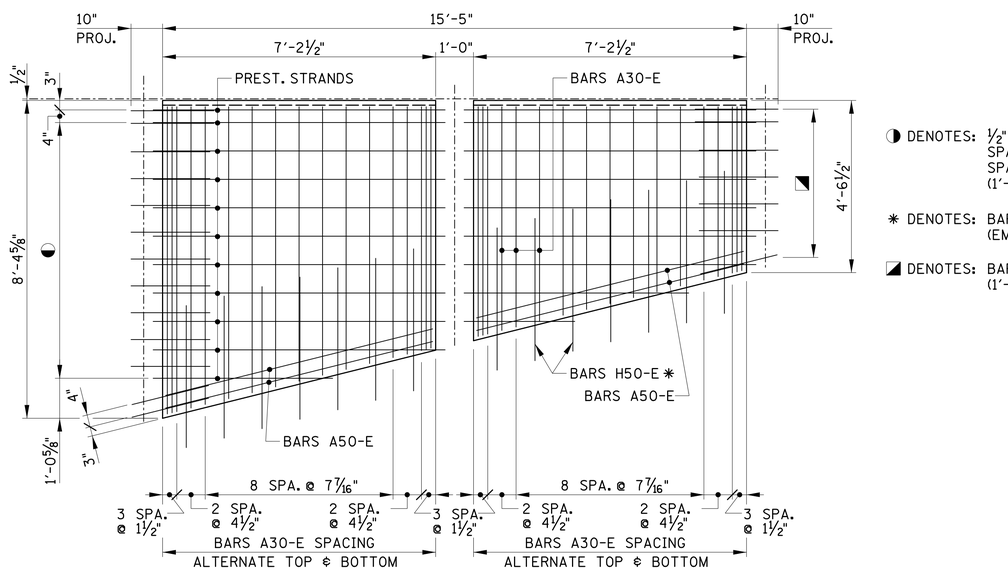

◑ DENOTES: ½" ø PRESTRESSING STRANDS
SPA. @ 9" = 6'-9", BARS H500E
SPACING WITH TOP MAT
(1'-3" EMBED., 10" PROJECT.)

✱ DENOTES: BARS H50-E SPACING WITH TOP MAT
(EMBED.VARIES, 10" PROJECT.)

◪ DENOTES: BARS H500E SPACING WITH TOP MAT
(1'-3" EMBED., 10" PROJECT.)

PANEL (BOTTOM MAT)

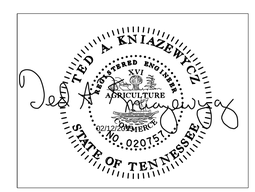

BRIDGE NO. 4

STATE OF TENNESSEE
DEPARTMENT OF TRANSPORTATION

PANEL A-2 DETAILS

I-40
OVER
JO JOHNSTON AVE.
BR. NO. 19-I0040-16.88
DAVIDSON COUNTY
2015

DESIGNED BY	GRESHAM SMITH & PARTNERS	DATE	2/09/2015
DRAWN BY	R. PALMER	DATE	1/2015
SUPERVISED BY	T. KNIAZEWYCZ	DATE	1/2015
CHECKED BY	T. KNIAZEWYCZ	DATE	2/2015

GRESHAM SMITH AND PARTNERS

knizet
Q:\2807115\b\Bridge C Jo Johnston\bridge 1\8071b15cb1s4a.sht
2/13/2015
PRF

BR-119-136