CONST. NO. 19005-3161-44

PROJECT NO.	YEAR	SHEET NO.
BH-I-40-4(86)	2015	

REVISIONS

NO.	DATE	BY	BRIEF DESCRIPTION

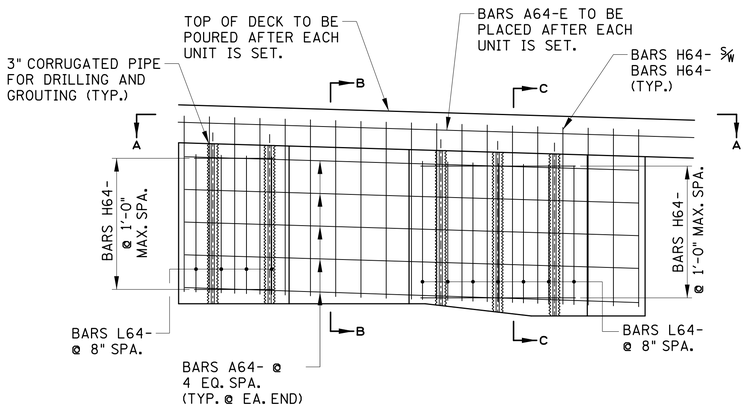

ELEVATION

LOOKING FORWARD ON SURVEY
(OUTSIDE BEAMS LEFT OF SURVEY ℄)

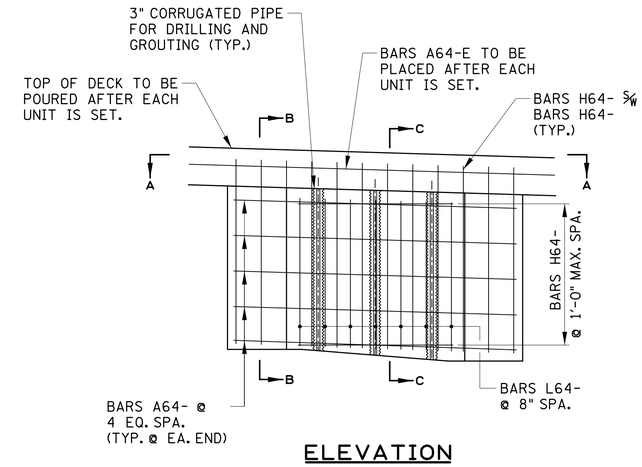

ELEVATION

LOOKING FORWARD ON SURVEY
(BETWEEN INTERIOR BEAMS)

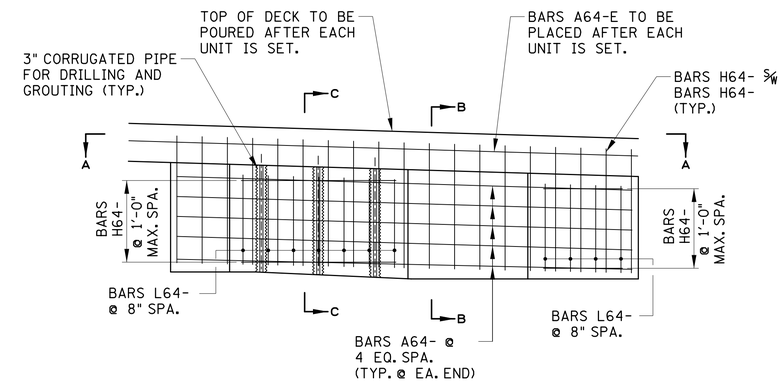

ELEVATION

LOOKING FORWARD ON SURVEY
(OUTSIDE BEAMS RIGHT OF SURVEY ℄)

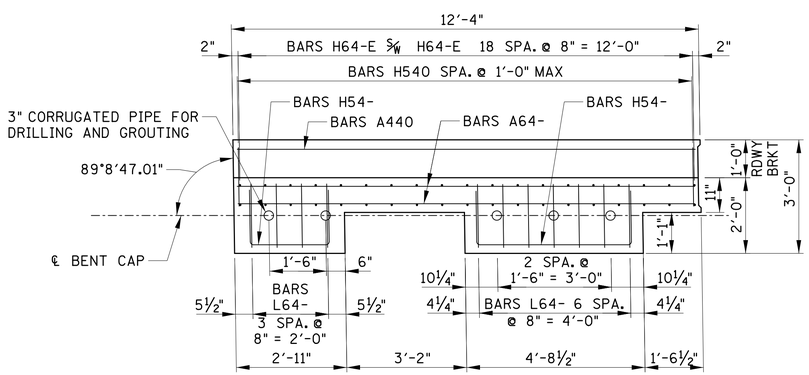

SECTION A-A

LOOKING FORWARD ON SURVEY

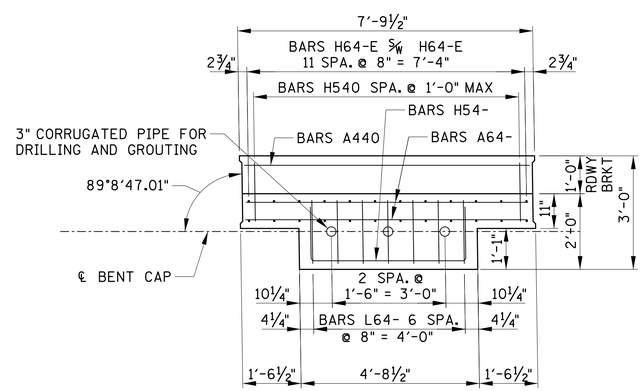

SECTION A-A

LOOKING FORWARD ON SURVEY

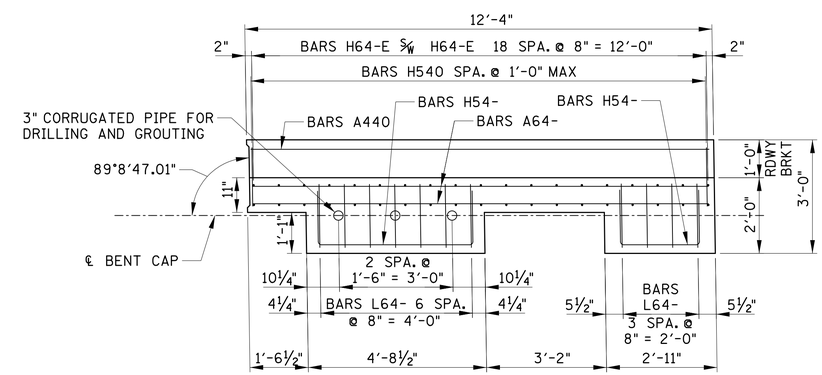

SECTION A-A

LOOKING FORWARD ON SURVEY

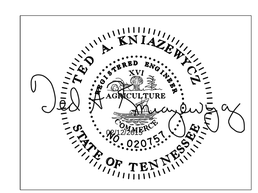

BRIDGE NO. 2

STATE OF TENNESSEE
DEPARTMENT OF TRANSPORTATION

ABUTMENT NO. 2
PRECAST ENDWALL DETAILS
I-40
OVER
CSX RAILROAD
BR. NO. 19-I0040-16.75
DAVIDSON COUNTY
2015

BR-119-80

DESIGNED BY GRESHAM SMITH & PARTNERS DATE 2/09/2015
DRAWN BY R. PALMER DATE 1/2015
SUPERVISED BY T. KNIAZEWYCZ DATE 1/2015
CHECKED BY T. KNIAZEWYCZ DATE 2/2015

GRESHAM SMITH AND PARTNERS

kniazet
Q:\2807115\b\Bridge B Clinton\bridge 1\8071b15b1b3B.sht
2/12/2015
PRF