CONST. NO.	19005-3161-44	
PROJECT NO.	YEAR	SHEET NO.
BH-I-40-4(86)	2015	

REVISIONS

NO.	DATE	BY	BRIEF DESCRIPTION

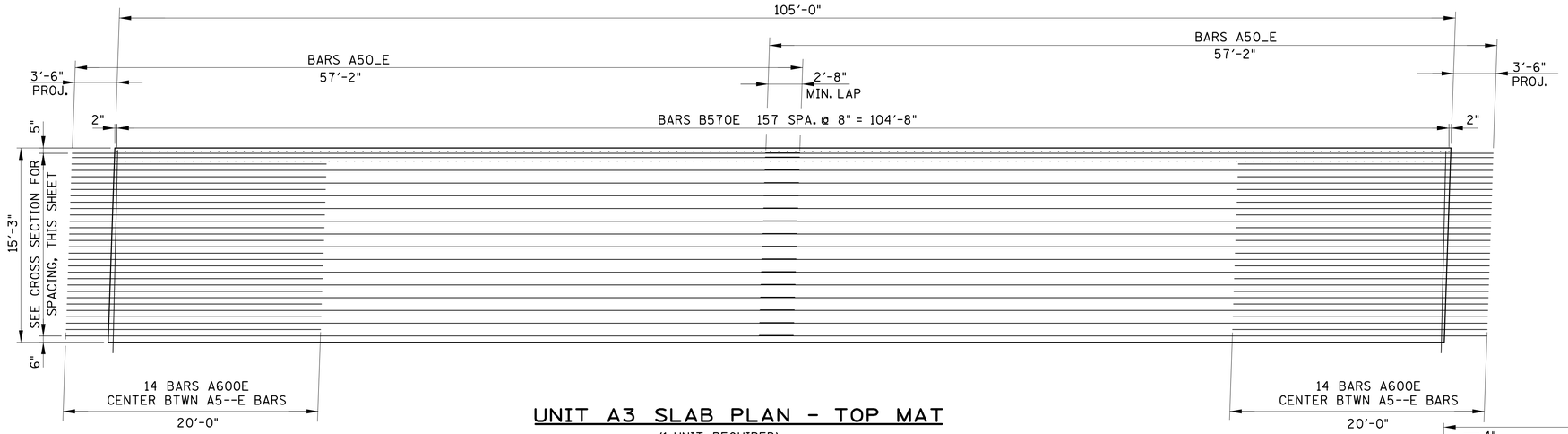

UNIT A3 SLAB PLAN - TOP MAT

(1 UNIT REQUIRED)

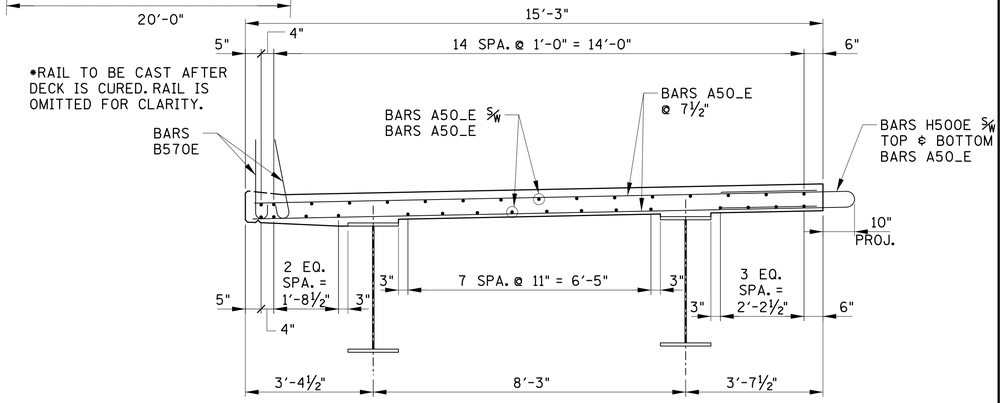

SLAB SECTION "A"

NOTE: VERTICAL FACE OF SUPERSTRUCTURE UNITS SHALL BE ROUGHENED AT TIME OF CASTING BY CHEMICAL OR OTHER FORMING METHODS.

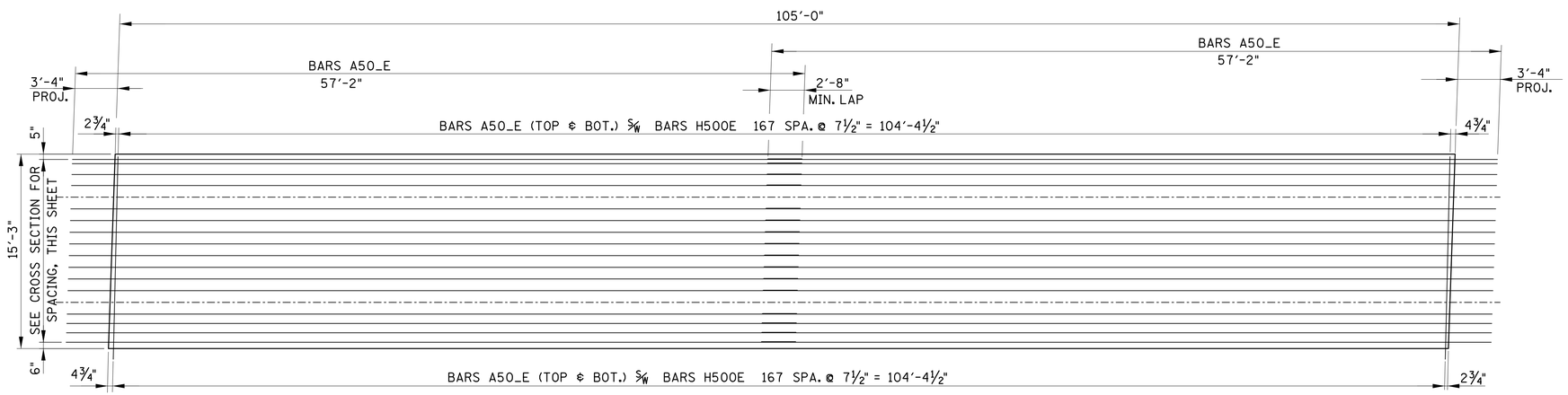

UNIT A3 SLAB PLAN - BOTTOM MAT

(1 UNIT REQUIRED)

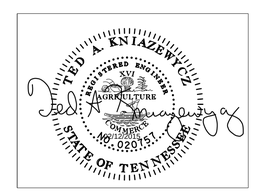

BRIDGE NO. 1

STATE OF TENNESSEE
DEPARTMENT OF TRANSPORTATION

SUPERSTRUCTURE DETAILS

I-40 OVER
HERMAN STREET
AND NWRR
BR. NO. 19-I0040-16.62
DAVIDSON COUNTY
2015

BR-119-17

DESIGNED BY	GRESHAM SMITH & PARTNERS	DATE	2/09/2015
DRAWN BY	G.YOUNG	DATE	1/2015
SUPERVISED BY	T. KNIAZEWYCZ	DATE	1/2015
CHECKED BY	T. KNIAZEWYCZ	DATE	2/2015

GRESHAM SMITH AND PARTNERS

kniazet
Q:\2807115\b\Bridge A Herman\Bridge 1\8071b15ab1s3c.sht
2/12/2015
PRF