CONST. NO.	19005-3161-44	
PROJECT NO.	YEAR	SHEET NO.
BH-I-40-4(86)	2015	

REVISIONS

NO.	DATE	BY	BRIEF DESCRIPTION

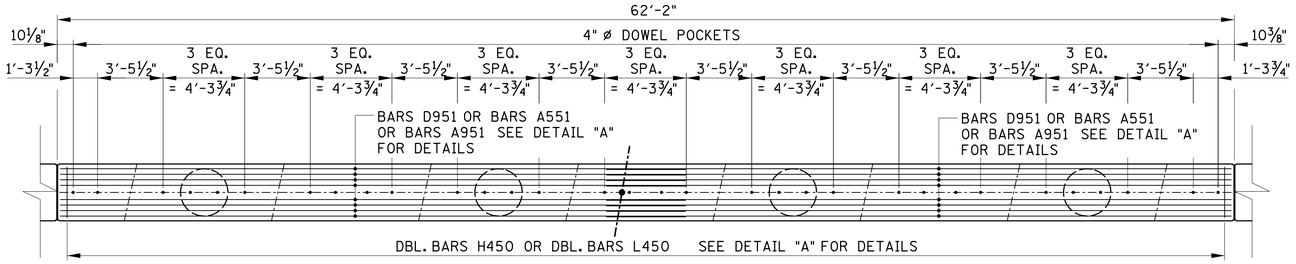

SECTION B-B

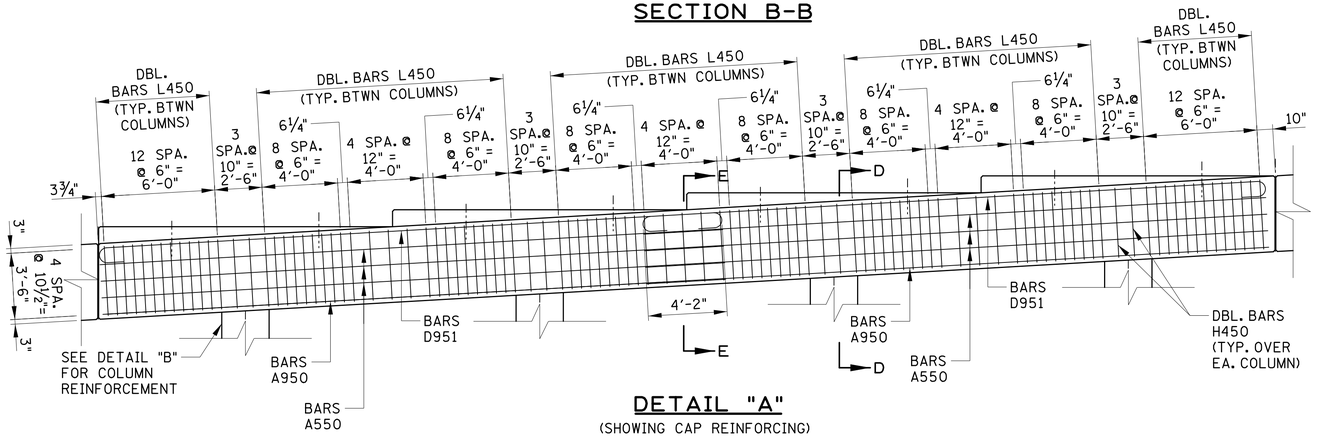

DETAIL "A"

(SHOWING CAP REINFORCING)

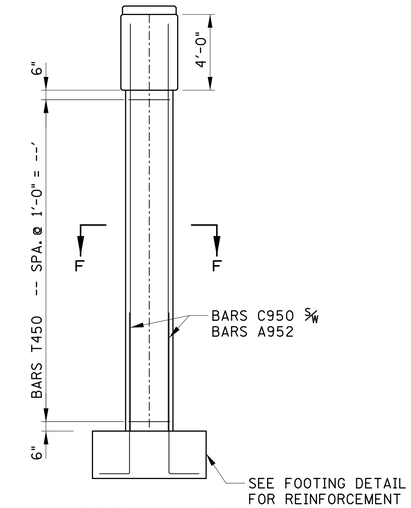

DETAIL "B"

(SHOWING COLUMN REINFORCING)

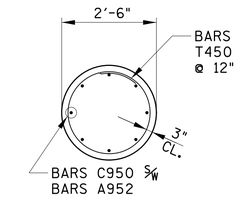

SECTION F-F

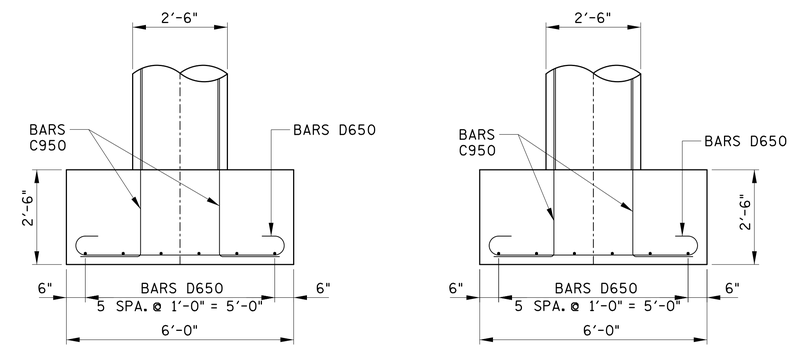

FRONT VIEW

END VIEW

FOOTING ELEVATION

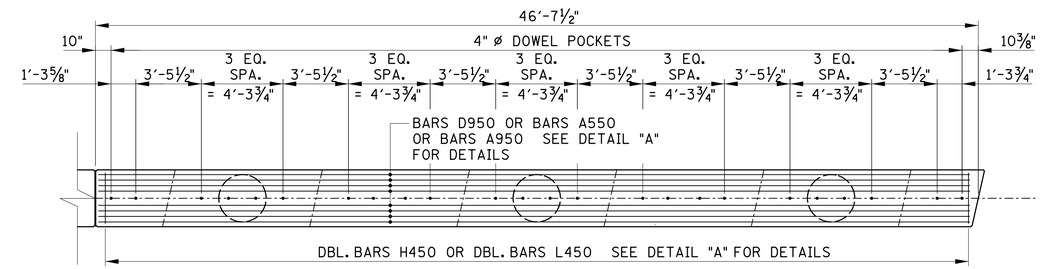

SECTION C-C

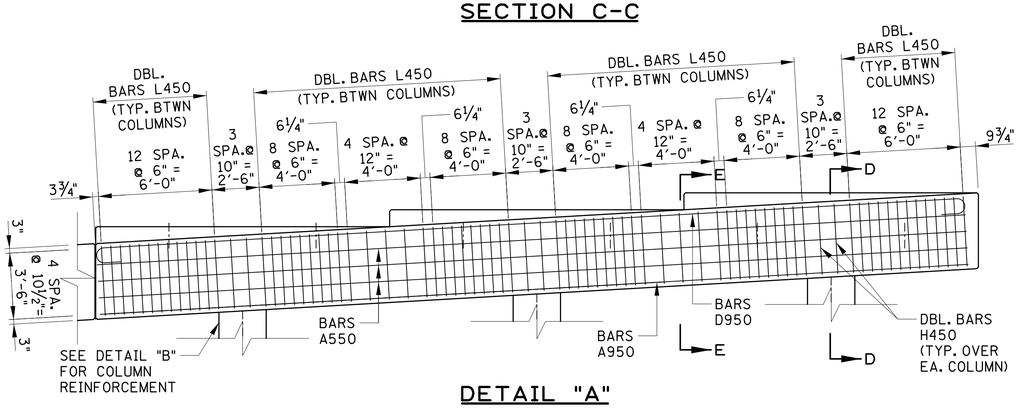

DETAIL "A"

(SHOWING CAP REINFORCING)

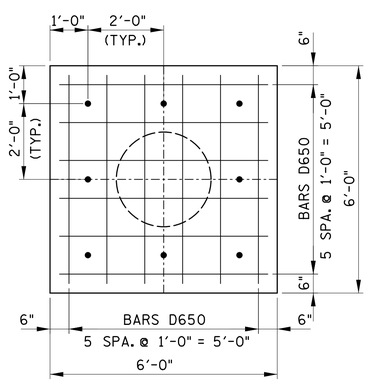

FOOTING PLAN

- DENOTES 2'-0" DOWEL BAR (SPACE AS SHOWN) (EMBED / PROJECT 1'-0")

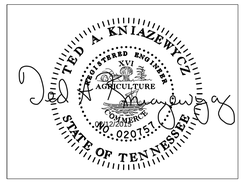

BRIDGE NO. 5

STATE OF TENNESSEE
DEPARTMENT OF TRANSPORTATION

ABUTMENT NOS. 1 & 2
DETAILS
I-40
OVER
CHARLOTTE AVE.
BR. NO. 19-I0040-17.09
DAVIDSON COUNTY
2015

BR-119-195

DESIGNED BY	GRESHAM SMITH & PARTNERS	DATE	2/09/2015
DRAWN BY	G.YOUNG	DATE	1/2015
SUPERVISED BY	T. KNIAZEWYCZ	DATE	1/2015
CHECKED BY	T. KNIAZEWYCZ	DATE	2/2015

GRESHAM SMITH AND PARTNERS

knlazet
Q:\2807115\b\Bridge D Charlotte\Bridge 1\8071b15db1a2.sht
2/12/2015
PRF