CONST. NO. 19005-3161-44

PROJECT NO.	YEAR	SHEET NO.
BH-I-40-4(86)	2015	

REVISIONS

NO.	DATE	BY	BRIEF DESCRIPTION

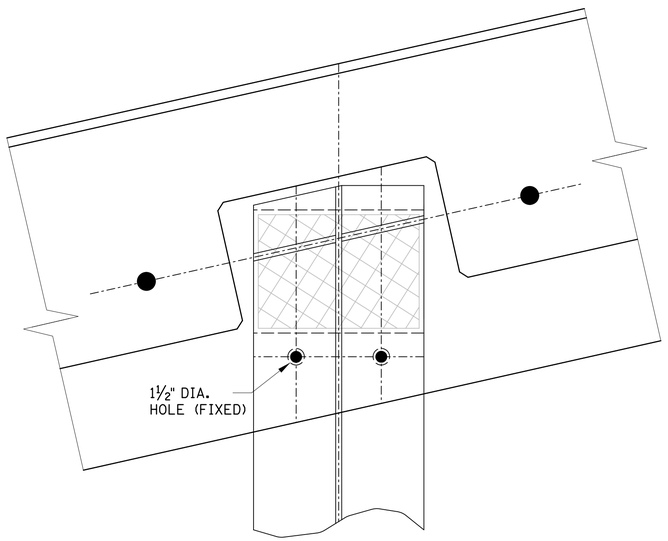

PLAN

(ABUTMENT NO. 1 & NO. 2)

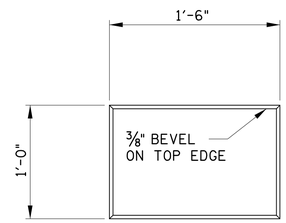

STACKED SHIM PLATE

3" THICK FOR EVEN NO. GIRDERS
8" THICK FOR ODD NO. GIRDERS

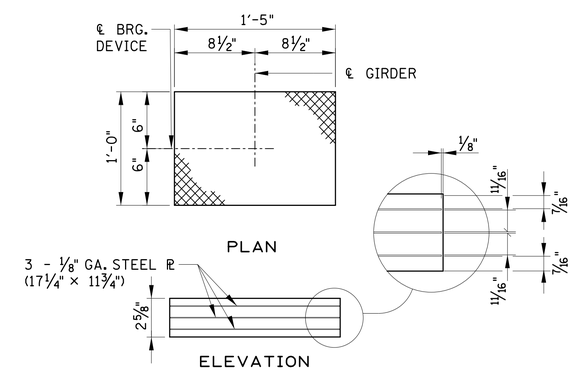

ELASTOMERIC BEARING

(ABUTMENT NO. 1 & NO. 2)

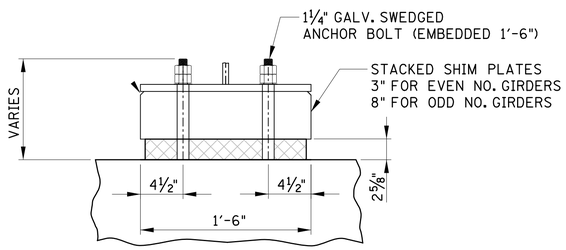

SECTION

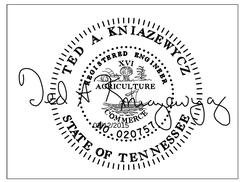

BRIDGE NO. 5

STATE OF TENNESSEE
DEPARTMENT OF TRANSPORTATION

BEARING DETAILS

I-40
OVER
CHARLOTTE AVE.
BR. NO. 19-I0040-17.09
DAVIDSON COUNTY
2015

BR-119-193

DESIGNED BY GRESHAM SMITH & PARTNERS DATE 2/09/2015
DRAWN BY G.YOUNG DATE 1/2015
SUPERVISED BY T. KNIAZEWYCZ DATE 1/2015
CHECKED BY T. KNIAZEWYCZ DATE 2/2015

GRESHAM SMITH AND PARTNERS

kniazet
Q:\2807115\b\Bridge D Charlotte\Bridge 1\8071b15db1bd.sht
2/12/2015
PRF