TYPE	YEAR	PROJECT NO.	SHEET NO.
CONST.	2015	BH-I-40-4(86)	20

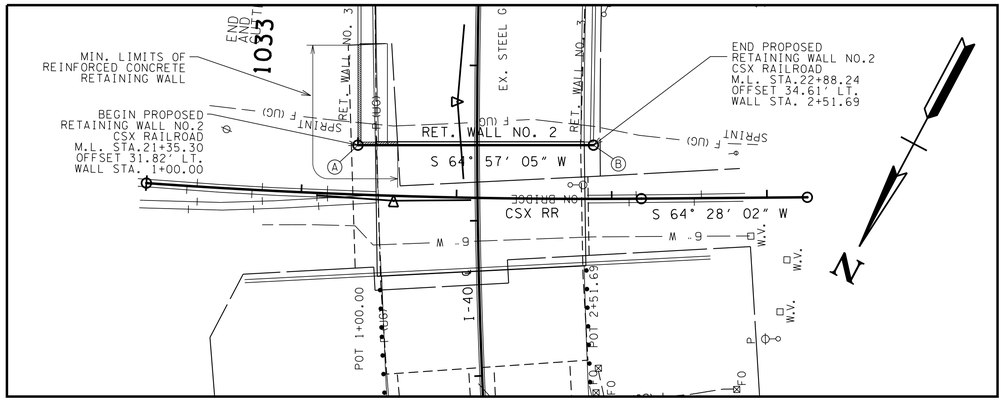

PLAN VIEW OF RETAINING WALL NO.2

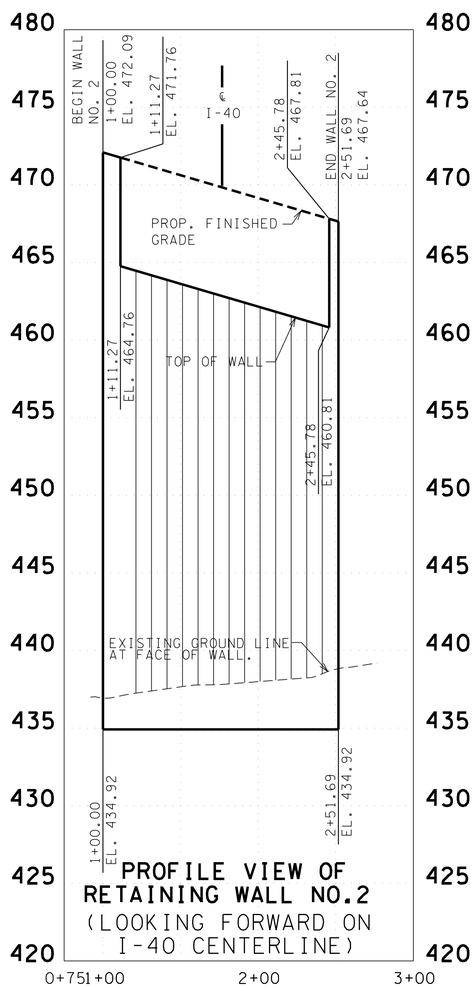

PROFILE VIEW OF RETAINING WALL NO.2
(LOOKING FORWARD ON I-40 CENTERLINE)

ESTIMATED QUANTITIES FOR RETAINING WALL

ITEM NO.	604-07.02
DESCRIPTION	RETAINING WALL NO.2 S.F.
QUANTITY	4,360 S.F.

NOTE : THE RETAINING WALL PAY QUANTITY IS BASED ON THE SURFACE AREA OF CONCRETE FROM THE APPROXIMATE TOP OF WALL TO A MINIMUM OF 2' BELOW THE EXISTING/PROPOSED GROUND LINE. REINFORCED ZONE CONSTRUCTION SHALL BE COORDINATED WITH WALL NO. 3.

** PRELIMINARY DESIGN FOR UNIAXIAL GEOGRID BASED ON THE FOLLOWING MATERIALS TYPES FROM BOTTOM FOR 30' DESIGN HEIGHT:
5 LAYERS TENSAR UX1400MSE (1750 SY)
7 LAYERS TENSAR UX1500MSE (2500 SY)
10 LAYERS TENSAR UX1600MSE (3500 SY)

ALTERNATE DESIGN AND MATERIALS MAY BE CONSIDERED BY THE ENGINEER.

THE RETAINING WALL PAY QUANTITY INCLUDES 24' REINFORCED SELECT BACKFILL ZONE WITH UNIAXIAL GEOGRID** SPACED AT 18" INTERVALS USED IN ALL FILL LOCATIONS. ALSO INCLUDES REMOVAL OF EXISTING 1' OF TOPSOIL AND TEXTURE COATING (435 SY).

UNDERCUTTING AND BACKFILLING WITH GRANULAR MATERIAL, FILL OUTSIDE OF THE REINFORCED ZONE, AND TEMPORARY SHORING REQUIRED FOR CONSTRUCTIONOF THE WALL ARE PAID IN SEPARATE PAY ITEMS.

WALL NO.2 LOCATION STAKE-OUT POINTS

RET. WALL BASELINE STATION	CSX RR CENTERLINE STATION	N	E	CSX RR CENTERLINE REFERENCE	TOP RET. WALL ELEVATION	BOTTOM RET. WALL ELEVATION
1+00.00	21+35.30	668,003.0867	1,734,131.0646	31.82' LT.	472.09	434.92
1+11.27	21+46.66	667,998.3151	1,734,120.8546	32.23' LT.	471.76	434.92
2+45.78	22+82.28	667,941.3655	1,733,998.9953	34.61' LT.	467.81	434.92
2+51.69	22+88.24	667,938.8640	1,733,993.6430	34.61' LT.	467.64	434.92

PROPOSED WALL NO.2 ALIGNMENT

WALL STA.	CODE	LOCATION	M.L. STA.	N	E	M.L. OFFSET	FROM-TO	BEARING/RADIUS	LENGTH
1+00.00	Ⓐ	CSX RR	21+35.30	668,003.0867	1,734,131.0646	31.82' LT.	Ⓐ - Ⓑ	S 64°57'05" W	151.69'
2+51.69	Ⓑ	CSX RR	22+88.24	667,938.8640	1,733,993.6430	34.61' LT.			

☒ NOTE: SLEEPER SLAB FOOTING FOR PAVEMENT AT BRIDGE ENDS MAY BE ELIMINATED WITH THE INSTALLATION GEOSYNTHETICALLY REINFORCED SOIL BACKFILL WITH BIAXIAL GEOGRID AT 4" LIFTS WITH SELECT BACKFILL.

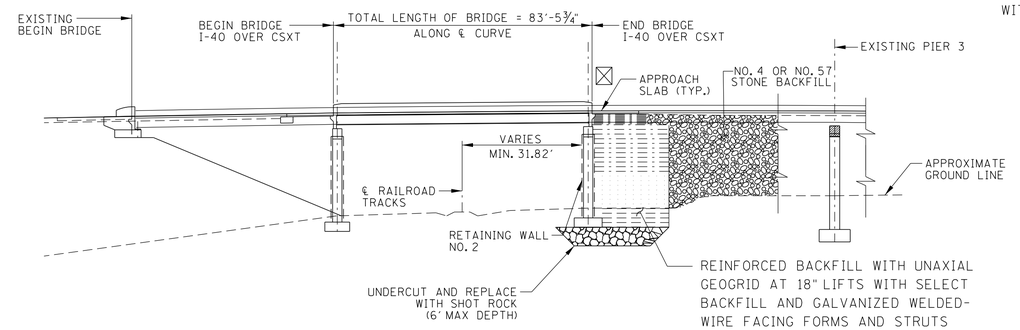

NOTE : THE RETAINING WALL PAY QUANTITY IS BASED ON THE SURFACE AREA OF CONCRETE FROM THE APPROXIMATE TOP OF WALL TO A MINIMUM OF 2' BELOW EXISTING GROUND.

FOR ESTIMATING PURPOSES, PER FOOT QUANTITIES FOR WALL HEIGHT OF 37 FEET INCLUDES 6.0 CY CONCRETE AND 400 LBS REINFORCING STEEL.

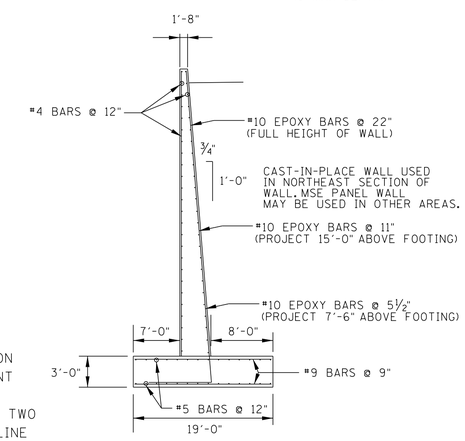

TOP OF WALL FOOTING ELEVATION TO MATCH EXISTING TOP OF BENT FOOTING ELEVATION BETWEEN COLUMNS AND BE A MINIMUM OF TWO FEET BELOW EXISTING GROUND LINE ELSEWHERE.

SEE SHEETS 2X AND 2Y FOR ADDITONAL NOTES AND DETAILS

CONTROL POINT DATA

CP-S56
N 668,072.5010
E 1,733,940.4226
STA. 1031+02.45
OFFSET 63.48' RT.

SEALED BY

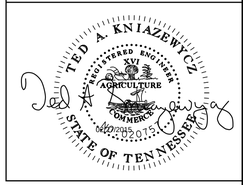

COORDINATES ARE NAD/83(1995), ARE DATUM ADJUSTED BY THE FACTOR OF 1.00006 AND TIED TO THE TGRN. ALL ELEVATIONS ARE REFERENCED TO THE NAVD 1988.

STATE OF TENNESSEE
DEPARTMENT OF TRANSPORTATION

RETAINING WALL CONCEPTUAL DRAWING
WALL NO. 2

SCALE: 1"=50' HORIZ.
1"=5' VERT.

3/9/2015 9:41:30 AM
0:\2807115\T\0020.sht