Index Of Sheets
SEE SHEET IA

TENN.	YEAR	SHEET NO.
	2016	1
FED. AID PROJ. NO.		
STATE PROJ. NO.	60015-4204-04	

STATE OF TENNESSEE
DEPARTMENT OF TRANSPORTATION
BUREAU OF ENGINEERING

MAURY COUNTY

STATE ROUTE 246 OVER
CARTERS CREEK & MAYHORN BRANCH

BRIDGE REPAIR

STATE HIGHWAY NO. 246 F.A.H.S. NO. NA

FED. BRIDGE NO. 60S61810003 **FED. BRIDGE NO. 60S61810005**

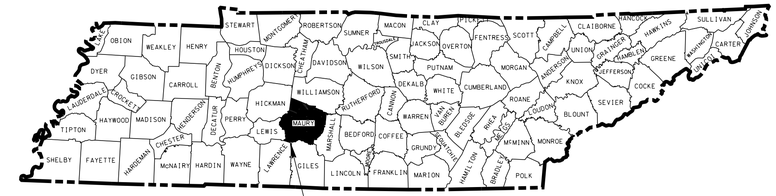

PROJECT LOCATION
MAURY COUNTY

END CONST. PROJECT NO. 60015-4204-04
STATE ROUTE 246 STA. 128+32.00

SR 246 OVER MAYHORN BRANCH
BRIDGE LOCATION 60-SR246-02.34

END CONST. PROJECT NO. 60015-4204-04
STATE ROUTE 246 STA. 59+82.00

SR 246 OVER CARTERS CREEK
BRIDGE LOCATION 60-SR246-01.07

BEGIN CONST. PROJECT NO. 60015-4204-04
STATE ROUTE 246 STA. 124+27.00

BEGIN CONST. PROJECT NO. 60015-4204-04
STATE ROUTE 246 STA. 56+91.00

N

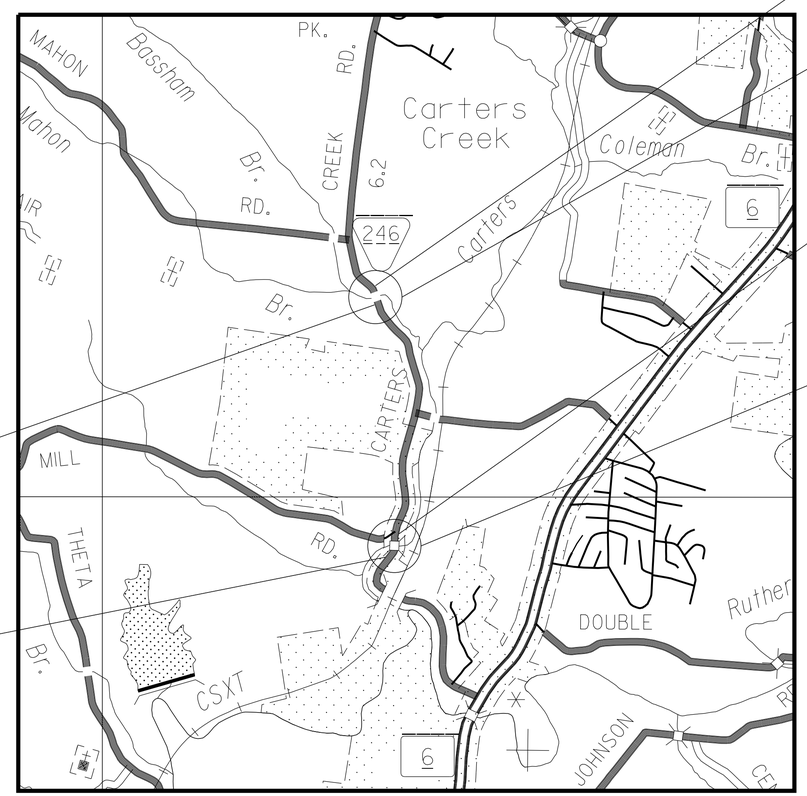

SCALE: 1"= 2000'

SR 246 OVER CARTERS CREEK

ROADWAY LENGTH	0.034 MILES
BRIDGE LENGTH	0.021 MILES
PROJECT LENGTH	0.055 MILES

SR 246 OVER MAYHORN BRANCH

ROADWAY LENGTH	0.065 MILES
BRIDGE LENGTH	0.012 MILES
PROJECT LENGTH	0.077 MILES

NO EXCLUSIONS
NO EQUATIONS

TRAFFIC DATA	
ADT (2014)	2570
V	40 MPH

UNOFFICIAL SET
NOT FOR BIDDING

APPROVED: Paul D. Degges
PAUL D. DEGGES, CHIEF ENGINEER

DATE:

APPROVED:
JOHN SCHROER, COMMISSIONER

U.S. DEPARTMENT OF TRANSPORTATION
FEDERAL HIGHWAY ADMINISTRATION

APPROVED:

DIVISION ADMINISTRATOR DATE

SPECIAL NOTES

PROPOSALS MAY BE REJECTED BY THE COMMISSIONER IF ANY OF THE UNIT PRICES CONTAINED THEREIN ARE OBVIOUSLY UNBALANCED, EITHER EXCESSIVE OR BELOW THE REASONABLE COST ANALYSIS VALUE.

THIS PROJECT TO BE CONSTRUCTED UNDER THE STANDARD SPECIFICATIONS OF THE TENNESSEE DEPARTMENT OF TRANSPORTATION DATED JANUARY 1, 2015 AND ADDITIONAL SPECIFICATIONS AND SPECIAL PROVISIONS CONTAINED IN THE PLANS AND IN THE PROPOSAL CONTRACT.

TDOT PROJECT MANAGER BRIAN EGLI, P.E.
TDOT C.E. MANAGER 1 BRIAN EGLI, P.E.
DESIGNED BY VOLKERT, INC.
DESIGNER KRYSTLE BRATTON, P.E. CHECKED BY JUSTIN T. ECKEL, P.E.

P.E. NO. 60015-4204-04

PIN NO. 121934.00

9/20/2016 11:44:05 PM
c:\volkert_pw_workingdir\krystle.bratton\dms17068\1-Carters Creek & Mayhorn Branch_TITLE.dgn

TYPE	YEAR	PROJECT NO.	SHEET NO.
CONST.	2016	60015-4204-04	1A

INDEX OF SHEETS (ROADWAY)

SHEET NO.	DESCRIPTION
1	TITLE SHEET
1A	ROADWAY INDEX AND STANDARD DRAWINGS INDEX
1B	PROJECT COMMITMENTS
2	ESTIMATED BRIDGE QUANTITIES
2A	BRIDGE GENERAL NOTES
2B	ESTIMATED ROADWAY QUANTITIES AND TABULATED QUANTITIES
2C	ROADWAY GENERAL NOTES
2D	ROADWAY DETAILS
3-3A	PRESENT AND PROPOSED LAYOUT
4-4B	TRAFFIC CONTROL PLAN
5-5A	EXISTING UTILITIES
6-6A	EROSION PREVENTION AND SEDIMENT CONTROL PLAN

REFERENCE BRIDGE DRAWINGS (BRIDGE 1)

SHEET NO.	DESCRIPTION
F-5-128 THRU F-5-130, F-2-85 AND F-2-86, A-0-10, AND E-8-24	EXISTING BRIDGE PLANS

INDEX OF SHEETS (BRIDGE 1)

SHEET NO.	DESCRIPTION
BR-122-84	LAYOUT OF BRIDGE TO BE REPAIRED
BR-122-85	ESTIMATED BRIDGE QUANTITIES
BR-122-86	BRIDGE GENERAL NOTES
BR-122-87	PHASING PLAN
BR-122-88	SUPERSTRUCTURE
BR-122-89	SUPERSTRUCTURE DETAILS (1)
BR-122-90	SUPERSTRUCTURE DETAILS (2)
BR-122-91	PRESTRESSED BOX BEAM DETAILS (SPANS 1 & 3)
BR-122-92	PRESTRESSED BOX BEAM DETAILS (SPAN 2)
BR-122-93	ABUTMENT/PIER DEMOLITION DETAILS
BR-122-94	ABUTMENT NO. 1
BR-122-95	ABUTMENT NO. 2
BR-122-96	ABUTMENT DETAILS
BR-122-97	BENT NO. 1
BR-122-98	BENT NO. 2
BR-122-99	BENT DETAILS
BR-122-107	MISCELLANEOUS REPAIR DETAILS

REFERENCE BRIDGE DRAWINGS (BRIDGE 2)

SHEET NO.	DESCRIPTION
F-13-36 THRU F-13-38	EXISTING BRIDGE PLANS

INDEX OF SHEETS (BRIDGE 2)

SHEET NO.	DESCRIPTION
BR-122-100	LAYOUT OF BRIDGE TO BE REPAIRED
BR-122-85	ESTIMATED BRIDGE QUANTITIES
BR-122-86	BRIDGE GENERAL NOTES
BR-122-101	PHASING PLAN
BR-122-102	SUPERSTRUCTURE
BR-122-103	SUPERSTRUCTURE DETAILS
BR-122-104	PRESTRESSED BOX BEAM DETAILS
BR-122-105	ABUTMENT NO. 1
BR-122-106	ABUTMENT NO. 2
BR-122-107	MISCELLANEOUS REPAIR DETAILS

STANDARD ROADWAY DRAWINGS

DWG. NO.	REV.	DESCRIPTION
ROADWAY DESIGN STANDARDS		
RD-A-1	12-18-99	STANDARD ABBREVIATIONS
RD-L-1	10-26-94	STANDARD LEGEND
RD-L-2	09-05-01	STANDARD LEGEND FOR UTILITY INSTALLATIONS
RD-L-5	05-01-08	STANDARD LEGEND FOR EROSION PREVENTION AND SEDIMENT CONTROL
RD-L-6	03-30-10	STANDARD LEGEND FOR EROSION PREVENTION AND SEDIMENT CONTROL
RD-L-7		STANDARD LEGEND FOR EROSION PREVENTION AND SEDIMENT CONTROL
RD-L-8		STANDARD LEGEND FOR EROSION PREVENTION AND SEDIMENT CONTROL
SAFETY APPURTENANCES AND FENCE		
S-PL-2		SAFETY PLAN AT SIDE ROADS OR PRIVATED DRIVES
S-PL-3		SAFETY PLAN: MINIMUM INSTALLATION AT BRIDGE ENDS
S-GR31-1	04-04-16	W-BEAM GUARDRAIL
S-GRC-1		GUARDRAIL CONNECTION TO BRIDGE ENDS OR BARRIER WALL
S-GRT-2	04-04-16	TYPE 38 GUARDRAIL TERMINAL
S-GRT-2P		EARTH PAD FOR TYPE 38 TERMINAL
S-GRT-3	04-04-16	TYPE 21 GUARDRAIL TERMINAL
S-GRA-3D		TYPE 21 GUARDRAIL TERMINAL (DETAILS)
S-GRA-3	05-01-15	GUARDRAIL ANCHOR FOR TYPE 21, 13, AND IN-LINE TERMINALS
EROSION PREVENTION AND SEDIMENT CONTROL		
EC-STR-3C	08-01-12	SILT FENCE WITH WIRE BACKING
EC-STR-3E	04-01-08	SILT FENCE FABRIC JOINING DETAILS
EC-STR-30		INSTREAM DIVERSION (WITHOUT TRAFFIC)
EC-STR-30A		INSTREAM DIVERSION (WITH TRAFFIC)
TRAFFIC CONTROL APPURTENANCES		
T-M-1	07-24-14	DETAILS OF PAVEMENT MARKINGS FOR CONVENTIONAL ROADS AND MARKING ABBREVIATIONS
T-M-2	07-24-14	DETAILS OF PAVEMENT MARKINGS FOR CONVENTIONAL ROADS
T-PBR-1	06-30-09	INTERCONNECTED PORTABLE BARRIER RAIL
T-PBR-2	11-01-11	DETAIL FOR VERTICAL PANELS AND FLEXIBLE DELINEATORS
T-WZ-32	10-29-13	TRAFFIC CONTROL PLAN SIGNAL LAYOUT FOR TRAFFIC SIGNAL AT TWO LANE BRIDGE RECONSTRUCTION SITE
T-WZ-33	05-27-98	TRAFFIC CONTROL PLAN FOR CLOSE INTERSECTION CONDITIONS USING TRAFFIC SIGNAL AT TWO LANE BRIDGE RECONSTRUCTION SITE
T-WZ-34	09-01-05	TRAFFIC CONTROL PLAN GENERAL NOTES FOR TRAFFIC SIGNAL AT TWO LANE BRIDGE RECONSTRUCTION SITE
T-WZ-35	04-02-12	TRAFFIC CONTROL PLAN PAY ITEM AND SIGN DETAILS FOR TRAFFIC SIGNAL AT TWO LANE BRIDGE RECONSTRUCTION SITE

STANDARD BRIDGE DRAWINGS

DWG. NO.	REV.	DESCRIPTION
STD-1-1SS	05-01-14	BRIDGE RAILING SINGLE SLOPE CONCRETE PARAPET
STD-1-2SS		SLIDER PLATES FOR SINGLE SLOPE PARAPETS AND DECK DRAINS
STD-1-5	03-26-14	REINFORCED CONCRETE PAVEMENT AT BRIDGE ENDS
STD-2-1	11-01-10	BRIDGE MOUNTED INTERCONNECTED PORTABLE BARRIER RAIL
STD-4-1	04-08-05	STD. PRECAST PRESTRESSED BRIDGE DECK PANELS GENERAL DETAILS
STD-4-2	04-08-05	STD. PRECAST PRESTRESSED BRIDGE DECK PANELS DESIGN CRITERIA
STD-4-3	03-02-02	STD. PRECAST PRESTRESSED BRIDGE DECK PANELS GENERAL DETAILS
STD-4-4		STD. PRECAST PRESTRESSED BRIDGE DECK PANELS CONSTRUCTION DETAILS
STD-5-2	05-01-14	STD. PILE DETAILS
STD-6-1	11-01-10	STD. SEISMIC DETAILS
STD-9-1	10-07-08	REINFORCING BAR SUPPORT DETAILS FOR CONCRETE SLABS
STD-10-1	04-08-05	MISC. ABUTMENT AND DRAINAGE DETAILS
STD-14-3	10-15-08	STD. DETAILS FOR PRESTRESSED BOX BEAMS

LIST OF SPECIAL PROVISIONS

NO.	REV.	DESCRIPTION
202ACM	07-07-14	REMOVAL OF ASBESTOS CONTAINING MATERIAL (ACM)
604CR	02-19-96	REPAIR OF BRIDGE DECK CRACKS

UNOFFICIAL SET

NOT FOR BIDDING

STATE OF TENNESSEE
DEPARTMENT OF TRANSPORTATION

INDEX & STANDARD DRAWINGS

9/21/2016 12:10:15 AM
c:\volkert_pw_workingdir\krystle.bratton\dms17068\1A-Carters Creek & Mayhorn Branch_Index and Standard Drawings.dgn

TYPE	YEAR	PROJECT NO.	SHEET NO.
CONST.	2016	60015-4204-04	1B

PROJECT COMMITMENTS

COMMITMENT ID	SOURCE DIVISION	DESCRIPTION	STA. / LOCATION
EDHZ001	ENVIRONMENTAL DIVISION	To minimize the risk to construction workers, TDOT is committed to the removal of Asbestos-Containing Materials (ACM) from bridges that are being demolished, rehabilitated or repaired. ACM surveys were performed on the following two SR-246 bridges in Maury Co. 1) Bridge No. 60S61810003, SR-246 over Carter's Creek, LM 1.07 has ACM in the transite deck drains. The transite deck drains were not analyzed, but visually confirmed as specified on the bridge plans. Abatement of this material should be accomplished per SP202ACM Special Provision Regarding Removal of Asbestos-Containing Materials. ACM abatement should be completed prior to any demolition activities. State of Tennessee asbestos accreditation requirements (TCA 1200-01-20) mandates that ACM abatement work be performed by an accredited firm (contractor) using accredited abatement workers and supervisors. 2) Bridge No. 60S61810005, SR-246 over Mayhorn Branch, LM 2.34 had no detections of ACM. No special accommodations for demolition and waste disposal are anticipated for these structures and the material can be deposited in a C&D landfill. Prior to the demolition or rehabilitation of any structure (bridge or building), the contractor is required to submit the National Emission Standards for Hazardous Air Pollutants standard 10-day notice of demolition to the TDEC Division of Air Pollution Control (Standard Specifications for Road and Bridge Construction (January 1, 2015) Sections 107.08 D and 202.03).	CARTERS CREEK & MAYHORN BRANCH

UNOFFICIAL SET

NOT FOR BIDDING

STATE OF TENNESSEE
DEPARTMENT OF TRANSPORTATION

PROJECT COMMITMENTS

9/21/2016 1:49:11 AM
c:\volkert_pw_workingdir\krystle.bratton\dms17068\1B_Carters Creek & Mayhorn Branch_Project Commitments.dgn

ESTIMATED BRIDGE QUANTITIES

	ITEM NO.	DESCRIPTION	UNIT	60S61810003 OVER CARTERS CREEK	60S61810005 OVER MAYHORN BRANCH	TOTAL
(1)(2)	202-04.01	REMOVAL OF STRUCTURES (BRIDGE NO. 60S61810003)	LS	1	0	1
(1)	202-04.02	REMOVAL OF STRUCTURES (BRIDGE NO. 60S61810005)	LS	0	1	1
(3)	604-02.03	EPOXY COATED REINFORCING STEEL	LB.	22,129	15,117	37,246
(9)	604-03.01	CLASS A CONCRETE (BRIDGES)	C.Y.	46	16	62
(3)	604-03.02	STEEL BAR REINFORCEMENT (BRIDGES)	LB.	7,160	2,783	9,943
(4)(15)	604-03.04	PAVEMENT @ BRIDGE ENDS	S.Y.	0	71	71
	604-03.09	CLASS D CONCRETE (BRIDGE DECK)	C.Y.	98	60	158
(5)	604-04.02	APPLIED TEXTURE FINISH (EXISTING STRUCTURES)	S.Y.	1,110	340	1,450
	604-05.31	BRIDGE DECK GROOVING (MECHANICAL)	S.Y.	275	217	492
* (6)	604-10.05	CONCRETE	S.F.	18	26	44
(7)	604-10.14	REMOVE EXISTING WEARING SURFACE	LS	0.5	0.5	1
* (8)	604-10.54	CONCRETE REPAIRS	S.F.	17	26	43
*	604-10.58	EPOXY INJECTION (INJECTION)	GAL.	2	1	3
*	604-10.62	EPOXY INJECTION REPAIR (COMPLETE AND IN PLACE)	L.F.	30	9	39
(10)	615-02.19	PRESTRESSED CONCRETE BOX BEAM (24" X 36")	L.F.	0	252	252
(10)	615-02.22	PRESTRESSED CONCRETE BOX BEAM (18" X 36")	L.F.	424	0	424
(11)	617-02	BRIDGE DECK CRACK SEALING	L.F.	113	89	202
(11)	617-05	SEALANT (HMWM)	GAL.	2	2	4
(12)(13)	620-05.01	CONC PARAPET SINGLE SLOPE (STD-1-1SS)	L.F.	225	198	423
	712-02.47	BRIDGE MOUNTED INTERCONNECTED PORTABLE BARRIER RAIL	L.F.	112	63	175

* DENOTES: ITEM SHALL BE BID AS CONTINGENCY AND MAY BE INCREASED, DECREASED, OR ELIMINATED AS DIRECTED BY THE ENGINEER.

FOOTNOTES:

(1) INCLUDES ALL LABOR AND MATERIALS NECESSARY FOR PARTIAL REMOVAL AND DISPOSAL OF BRIDGE AS SHOWN IN THE PLANS.

(2) THE FOLLOWING ASBESTOS CONTAINING MATERIAL ELEMENTS WERE DETERMINED TO BE LOCATED ON THE EXISTING BRIDGE: TRANSITE DECK DRAINS. SEE SPECIAL PROVISION NO. 202ACM.

(3) MECHANICAL BAR SPLICERS MUST BE ON THE QUALIFIED PRODUCTS LIST 27 MAINTAINED BY THE DIVISION OF MATERIALS AND TESTS. THE BAR SPLICER SHALL MEET AASHTO STANDARD SPECIFICATIONS FOR MECHANICAL CONNECTION. WHEN EPOXY COATING IS REQUIRED, THE EXPOSED THREADS SHALL BE REPAIRED AFTER SPLICING ACCORDING TO SECTION 907 OF THE STANDARD SPECIFICATIONS. THE COST OF FURNISHING THE BAR SPLICERS AND EPOXY COATING, WHEN REQUIRED, INCLUDING ALL LABOR AND MATERIALS NECESSARY FOR COMPLETE INSTALLATION, SHALL BE INCLUDED IN THE UNIT PRICE BID FOR ITEM NOS. 604-02.03 AND 604-03.02.

(4) PRIOR TO CONSTRUCTION OF THE PAVEMENT AT BRIDGE ENDS, THE CONTRACTOR SHALL SUBMIT A PROPOSED BILL OF STEEL TO THE ENGINEER FOR APPROVAL.

(5) INCLUDES ALL LABOR AND MATERIALS NECESSARY FOR THE APPLICATION OF ALL TEXTURE COATING FOR FULL LENGTH OF BRIDGE AS SHOWN IN THE APPLIED TEXTURE FINISH SKETCH ON THIS SHEET.

(6) INCLUDES ALL LABOR AND MATERIALS TO PLACE HIGH EARLY STRENGTH CONCRETE FOR REPAIR AREAS NOTED IN THE PLANS.

(7) INCLUDES COST OF ALL LABOR AND MATERIALS REQUIRED TO REMOVE AND DISPOSE OF THE EXISTING ASPHALT WEARING SURFACE ON BRIDGE NOS. 60S61810003 & 60S61810005 (APPROXIMATE DEPTHS = 4" AND 8", RESPECTIVELY).

(8) INCLUDES ALL LABOR AND MATERIALS TO PLACE A POLYMER MODIFIED CEMENTITIOUS STRUCTURAL PATCHING MATERIAL FOR REPAIR AREAS NOTED IN THE PLANS.

(9) THE COST OF ALL MATERIALS AND LABOR NECESSARY FOR THE INSTALLATION OF 24 ANCHOR BOLT ASSEMBLIES SHALL BE INCLUDED IN THE UNIT PRICE BID FOR CLASS "A" CONCRETE (BRIDGES), ITEM NO. 604-03.01.

(10) COST OF ELASTOMERIC PADS AND RUBBER BONDING CEMENT TO BE INCLUDED IN THE UNIT PRICE BID FOR THE PRESTRESSED BEAM.

(11) INCLUDES ALL COST FOR INSTALLING THE BRIDGE DECK CRACK SEALER (HMWM) INCLUDING CRACK PREPARATION, CLEANING, LABOR, AND ALL MISCELLANEOUS MATERIALS REQUIRED TO SEAL THE LONGITUDINAL CONSTRUCTION JOINT ACCORDING TO SPECIAL PROVISION 604CR AND MANUFACTURER'S RECOMMENDATIONS.

(12) THE COST OF 20 BRIDGE DECK DRAINS (14 AND 6 AT BRIDGE NOS. 60S61810003 AND 60S61810005, RESPECTIVELY) TO BE INCLUDED IN THE UNIT PRICE BID FOR THE PARAPET.

(13) INCLUDES ALL LABOR AND MATERIALS NECESSARY TO CONSTRUCT NEW CONCRETE PARAPET INCLUDING MODIFIED END POSTS AND CURVED BARRIER EXTENSION AS SHOWN ON DWG. NO. BR-122-107.

(14) THE COST OF WATER STOPS, BITUMINOUS FIBERBOARD, EXPANDED POLYSTYRENE FILL, POLYETHYLENE SHEETING, AND ALL MISCELLANEOUS JOINT MATERIAL TO BE INCLUDED IN THE UNIT PRICE BID FOR OTHER ITEMS.

(15) INCLUDES ALL LABOR AND MATERIALS NECESSARY TO COMPLETE INSTALLATION OF BACKFILL AT ABUTMENTS WITH PAVEMENT AT BRIDGE ENDS.

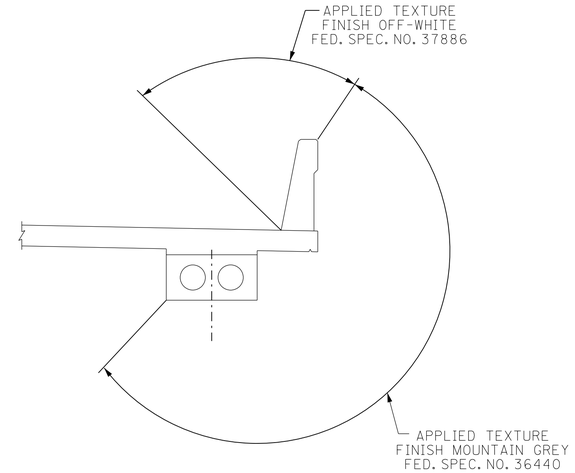

APPLIED TEXTURE FINISH SKETCH

(BRIDGE 1 SHOWN, BRIDGE 2 SIMILAR)
SYMMETRIC ABOUT ℄ BRIDGE

TEXTURE FINISH NOTES

IN ADDITION TO THE SURFACES SHOWN IN THE APPLIED TEXTURE FINISH SKETCH ALL EXPOSED SURFACES OF THE EXISTING AND RECONSTRUCTED ABUTMENTS AND PIERS ARE TO RECEIVE AN APPLIED TEXTURE FINISH (MOUNTAIN GREY, FED. SPEC. NO. 36440).

COST OF TEXTURE COATING SHALL BE INCLUDED IN ITEM NO. 604-04.02.

THE CONTRACTOR SHALL USE CONTAINMENT SCREENS OR OTHER MEASURES AS NECESSARY TO PREVENT ANY TEXTURE COATING FROM ENTERING THE ENVIRONMENT. CONTAINMENT MEASURES APPROVED BY THE ENGINEER AND COST SHALL BE INCLUDED IN ITEMS BID ON.

THE EXISTING SURFACES THAT ARE TO RECEIVE A TEXTURE FINISH SHALL BE FREE OF ALL FLAKING TEXTURE COATING, RUST, DIRT, OIL, AND OTHER FOREIGN SUBSTANCES PRIOR TO THE APPLICATION OF THE TEXTURE FINISH. THE SURFACE SHALL BE CLEANED TO THE COMPLETE SATISFACTION OF THE ENGINEER USING A HIGH PRESSURE WASH. COST TO BE INCLUDED IN ITEM NO. 604-04.02.

THE WASH WATER IS TO BE FILTERED AND PAINT CHIPS AND DEBRIS COLLECTED PRIOR TO RELEASE OF WATER.

PROJECT NO.	YEAR	SHEET NO.
60015-4204-04	2016	2

REVISIONS

NO.	DATE	BY	BRIEF DESCRIPTION

UNOFFICIAL SET

NOT FOR BIDDING

STATE OF TENNESSEE
DEPARTMENT OF TRANSPORTATION
BRIDGE NOS. 1 & 2
ESTIMATED BRIDGE QUANTITIES
STATE ROUTE 246
OVER CARTERS CREEK &
STATE ROUTE 246
OVER MAYHORN BRANCH
BR. NO. 60S61810003 &
BR. NO. 60S61810005
MAURY COUNTY
2016

BR-122-85

DESIGNED BY VOLKERT DATE 10/2015
DRAWN BY C. DIXON DATE 10/2015
SUPERVISED BY J. ECKEL DATE 09/2016
CHECKED BY A. DAVIDSON DATE 09/2016

VOLKERT

21-SEP-2016 23:49
535000 TDOT Bridge Repair\535003.17_SR246_over_MayhornBranch&_CartersCreek\DGN\Bridge\002_CC_BR Est. Quant.dgn

GENERAL NOTES:

SPECIFICATIONS:
STANDARD SPECIFICATIONS FOR ROAD AND BRIDGE CONSTRUCTION, TENNESSEE DEPARTMENT OF TRANSPORTATION, (JANUARY 1, 2015 EDITION)

LOADING:
HL-93 LIVE LOADING. DEAD LOAD INCLUDES 35 LB../ SQ. FT. FOR FUTURE WEARING SURFACE.

DESIGN SPECIFICATIONS:
AASHTO LRFD SEVENTH EDITION 2014 WITH ADDENDA.

CONCRETE:
TO BE CLASS "A" (CAST IN PLACE), f'c=3,000 psi, EXCEPT AS NOTED OTHERWISE.

CLASS "D" CONCRETE:
CONCRETE FOR BRIDGE DECK SHALL BE IN ACCORDANCE WITH SECTION 604 OF THE STANDARD SPECIFICATIONS.

CONCRETE CURING
ALL CONCRETE IN REPAIR AREAS SHALL BE CURED ACCORDING TO THE STANDARD SPECIFICATIONS.

BRIDGE DECK SURFACE FINISH:
TO BE IN ACCORDANCE WITH METHOD 3 IN ARTICLE 604.22 OF THE STANDARD SPECIFICATIONS.

BRIDGE DECK FORMS:
BRIDGE DECK FORMS FOR CONCRETE DECKS SHALL BE CONSTRUCTED USING EITHER REMOVABLE OR PERMANENT FORMS. PERMANENT FORMS MAY BE EITHER REMAIN-IN-PLACE STEEL OR PRECAST, PRESTRESSED CONCRETE PANELS. IN EITHER CASE, FORMS SHALL BE ATTACHED BY MEANS OTHER THAN WELDING TO MAIN STRUCTURAL MEMBERS OR REINFORCING STEEL. TEMPORARY ERECTION DIAPHRAGMS MUST BE USED AT THE ENDS OF PRECAST CONCRETE GIRDERS WHERE END DIAPHRAGMS, SUPPORT DIAPHRAGMS, OR ABUTMENT BACKWALLS ARE TO BE POURED CONCURRENTLY WITH THE DECK AND SHALL BE PROVIDED ELSEWHERE IN ACCORDANCE WITH THE SPECIFICATIONS TO PREVENT GIRDER ROTATION. SEE STANDARD DRAWING STD-4-1 THRU 4, STD-14-1, AND ARTICLE 604.05 FOR THE STANDARD SPECIFICATIONS.

REINFORCING STEEL:
SHALL BE ASTM A615 GRADE 60 UNLESS NOTED OTHERWISE (EPOXY COAT ALL SLAB STEEL). SEE SECTION 604 & 907 OF THE STANDARD SPECIFICATIONS.

BRIDGE RAIL SYSTEM:
BUILD BRIDGE RAILINGS ACCORDING TO STANDARD DRAWING STD-1-1SS. THE BRIDGE RAIL SHALL BE FORMED AND CAST PLUMB, NOT PERPENDICULAR TO THE SLAB. THE DIMENSIONS AT THE FRONT OR TRAFFIC FACE OF THE RAILING SHALL BE KEPT CONSTANT, WITH VARIATION FOR CROSS SLOPE ACCOMMODATED AT THE REAR FACE.

NOTE:
THE CONTRACTOR SHALL PROVIDE 100% CONVENTIONAL FALL PROTECTION FOR WORKERS INSTALLING DECKING ABOVE 15 FEET.

GROUTED BARS IN DRILLED HOLES:
HORIZONTALLY DRILLED HOLES SHALL BE DRILLED ½" IN DIAMETER LARGER THAN THE BAR, CLEANED, PACKED WITH NON-SHRINK GROUT, AND THE BAR ROTATED (NOT DRIVEN) TO ITS SEAT. VERTICALLY DRILLED HOLES SHALL BE DRILLED ¼' IN DIAMETER LARGER THAN THE BAR, CLEANED, PACKED WITH EPOXY GROUT, AND THE BAR SHALL BE DRIVEN TO ITS SEAT. ALL GROUTING MATERIAL SHALL BE APPROVED BY TDOT MATERIALS AND TESTS.

SHOP DRAWINGS:
SEE SECTION 105.2 OF THE STANDARD SPECIFICATIONS. A COPY SHALL ALSO BE SUBMITTED TO THE DIVISION OF STRUCTURES, BRIDGE INSPECTION AND REPAIR OFFICE.

JOINT SEALER:
USE TYPE II; CLASS "A" OR "B".

REQUIREMENTS AND RESTRICTIONS FOR PHASE CONSTRUCTION:
ONE 9 FOOT TRAFFIC LANE SHALL BE MAINTAINED AT ALL TIMES.

FORMS AND FALSEWORK:
CONCRETE FORM WORK, FALSEWORK, AND TEMPORARY SUPPORTS SHALL BE REMOVED FROM THE JOB SITE AFTER WORK IS COMPLETED. COST OF FORMS, FALSEWORK, AND TEMPORARY SUPPORT SHALL BE INCLUDED IN ITEMS BID ON. THIS WORK SHALL BE COMPLETED BEFORE FINAL PAYMENT IS APPROVED.

DRILLED-IN ANCHORS (MECHANICAL OR EPOXY):

CERTIFICATION:
THE CONTRACTOR SHALL FURNISH CERTIFIED ANCHOR PULL OUT DATA FROM AN INDEPENDENT TESTING LABORATORY USING CLASS "A" CONCRETE AS PRESCRIBED BY TENNESSEE HIGHWAY SPECIFICATIONS. THE REQUIRED ULTIMATE LOAD FOR 7/8" Ø ANCHORS IS 19,000 LBS., 18,000 LBS. FOR 3/4" Ø ANCHORS, 12,000 LBS FOR 5/8" Ø AND 9,000 LBS. FOR 1/2" Ø. IN-PLACE REQUIREMENTS: THE UNITS SHALL BE SUBSET 3/32" TO 1/4" AND TORQUED, WITH BASE PLATE IN PLACE, TO AN EQUIVALENT DIRECT PULL OUT LOAD OF 60 PERCENT OF REQUIRED ULTIMATE LOAD. THE DEPARTMENT WILL PERFORM TESTING OF ANCHORS ON SITE TO ENSURE THE SPECIFIED IN-PLACE REQUIREMENTS. INSTALLATIONS NOT MEETING THESE REQUIREMENTS MUST BE CORRECTED AT THE CONTRACTOR'S EXPENSE. FOR MECHANICAL ANCHORS, SLIPPAGE SHALL NOT EXCEED 1/4".

VALUE ENGINEERING ALTERNATE BRIDGE DESIGN CRITERIA:
ALTERNATE BRIDGE DESIGNS MAY NOT DIMINISH THE FUNCTIONAL OR STRUCTURAL EQUIVALENCY OF THE BRIDGE AND MUST MEET OR EXCEED THE SERVICE LEVEL AND ULTIMATE CAPACITIES OF THE CONTRACT PLANS STRUCTURE. ADDITIONALLY, THE WATERWAY OPENING AND FLOOD CLEARANCES MAY NOT BE REDUCED.

SPECIAL NOTE FOR UTILITIES:
CARE SHALL BE TAKEN WHILE REMOVING AND REPAIRING BRIDGE COMPONENTS SO AS NOT TO DISTURB OR DAMAGE ANY UTILITIES.

DEMOLITION:
THE CONTRACTOR SHALL TAKE SPECIAL CARE TO PROTECT ANY PARTS OF THE STRUCTURE THAT ARE NOT TO BE REMOVED SPECIFICALLY. THE CONTRACTOR IS NOT ALLOWED TO USE A HYDRAULIC RAM MOUNTED ON A BACKHOE (COMMONLY CALLED A HOE RAM) OR OTHER SIMILARLY HEAVY EQUIPMENT FOR CONCRETE REMOVAL. PNEUMATIC HAMMERS MAY BE USED, AS SPECIFIED, TO REMOVE UNSOUND CONCRETE. SAWING OR CUTTING OF THE CONCRETE IS ACCEPTABLE SO LONG AS ANY SPECIFIED PROJECTION OF THE EXISTING REINFORCEMENT IS MAINTAINED. ALL DEVICES PROPOSED FOR CONCRETE DEMOLITION SHALL MEET THE APPROVAL OF THE ENGINEER.

APPROVAL OF MATERIALS:
NO FABRICATION SHALL BE STARTED UNTIL ALL THE MATERIALS INVOLVED HAVE BEEN APPROVED BY THE TENNESSEE DEPARTMENT OF TRANSPORTATION, DIVISION OF MATERIALS AND TESTS WITH A COPY OF THE TEST REPORTS ALSO GOING TO THE TENNESSEE DEPARTMENT OF TRANSPORTATION, DIVISION OF STRUCTURES, BRIDGE INSPECTION AND REPAIR OFFICE.

SPECIAL NOTES TO CONTRACTOR:
CONTRACTOR SHALL USE EXTREME CARE AND TAKE ANY MEASURE NECESSARY TO ENSURE THAT NO DEBRIS IS DROPPED INTO THE STREAM BELOW. THIS SHALL BE ACCOMPLISHED BY THE USE OF BASKETS, NETTING, WRAPPING, WORK PLATFORM, OR OTHER SIMILARLY EFFECTIVE MEANS. ANY DEBRIS WHICH IS ALLOWED TO DROP ON THE BANKS BELLOW THE BRIDGE SHALL NOT BE ALLOWED TO ENTER THE WATER AND SHALL BE REMOVED AND DISPOSED OF BY THE CONTRACTOR. COST OF REMOVING AND DISPOSING OF DEBRIS SHALL BE INCLUDED IN OTHER ITEMS BID.

THE CONTRACTOR IS RESPONSIBLE FOR AND SHOULD TAKE ALL PRECAUTIONS TO ENSURE THE STABILITY OF THE STRUCTURE DURING THE REPAIRS.

THE CONTRACTOR SHALL FIELD VERIFY ALL DIMENSIONS AND QUANTITIES BEFORE ORDERING ANY MATERIALS.

THE CONTRACTOR SHALL CHECK LOCATION OF ALL EXISTING SUBSTRUCTURES AND VERIFY SPAN LENGTHS BEFORE ORDERING STEEL.

QUICK SET PATCHING MATERIAL:
QUICK-SET PATCHING MATERIAL SHALL BE A POLYMER MODIFIED CEMENTIOUS MATERIAL. SEE TDOT QUALIFIED PRODUCTS LIST 13, SECTION B.6, FOR ACCEPTABLE MATERIALS.

NOTE:
OUR EXISTING BRIDGE DRAWINGS, INSPECTION REPORTS OR ACM (ASBESTOS CONTAINING MATERIAL) SURVEY INDICATE THIS BRIDGE CONTAINS ELEMENTS WITH ACM. TO MINIMIZE THE AMOUNT OF HAZARDOUS MATERIAL WASTE, THE ELEMENTS CONTAINING ASBESTOS SHALL BE REMOVED PRIOR TO DEMOLITION OF THE DESIGNATED PORTIONS OF THE STRUCTURE AS DETAILED IN THE PLAN SET. THE CONTRACTOR IS REQUIRED TO TAKE ALL MANDATORY SAFEGUARDS PRESCRIBED BY STATE AND FEDERAL LAW FOR BOTH WORKER PROTECTION AND HAZARDOUS MATERIAL DISPOSAL.

SPECIAL NOTES FOR EPOXY INJECTION

1) UNLESS OTHERWISE NOTED, THE INTENT OF THIS SPECIFICATION IS FOR DESIGNATED CRACKS TO BE INJECTED THEIR FULL LENGTH AND DEPTH.
2) DESIGNATED CRACKS SHALL BE INJECTED WITH AN APPROVED EPOXY RESIN ADHESIVE FILLING ALL VOIDS FOR THE CRACK DEPTH OR THICKNESS OF THE MEMBER. THE EPOXY RESIN ADHESIVE SHALL BE ON THE CURRENT QUALIFIED PRODUCTS LIST MAINTAINED BY THE DIVISION OF MATERIALS AND TEST. ALL CRACKS SHALL BE INJECTED USING AN ADHESIVE SUITABLE FOR THE FIELD CONDITIONS (CRACK WIDTH, TEMPERATURE, HUMIDITY, ETC.) RECOMMENDED BY THE ADHESIVE MANUFACTURER AS SHOWN ON MATERIAL DATA SHEETS. FOLLOWING INJECTION, ALL INJECTION PORTS AND CAPPING MATERIAL SHALL BE REMOVED FROM EXPOSED SURFACES LEAVING THE SURFACE SMOOTH AND FLUSH WITH THE SURROUNDING CONCRETE SURFACES.
3) THE CONTRACTOR SHALL HAVE SUFFICIENT EXPERIENCE AND TRAINING TO PERFORM THE EPOXY INJECTION IN ACCORDANCE WITH THESE PLANS. PRIOR TO PERFORMING ANY WORK, THE CONTRACTOR SHALL SUBMIT TO THE ENGINEER A WRITTEN PROCEDURE FOR PERFORMING THE EPOXY INJECTION. THE PROCEDURE SHALL DESCRIBE IN DETAIL HOW THE WORK WILL BE PERFORMED. THE PROCEDURE SHALL INCLUDE, BUT NOT BE LIMITED TO THE FOLLOWING INFORMATION.
   - A. DESCRIPTION OF EQUIPMENT
     1. THE INJECTION EQUIPMENT SHALL BE OF THE TYPE THAT MIXES ADHESIVE COMPONENTS AT THE INJECTION HEAD. THE INJECTION EQUIPMENT SHALL BE CAPABLE OF DISCHARGING MIXED ADHESIVE AT ANY PRESSURE UP TO 300 PSI.
     2. THE INJECTION EQUIPMENT SHALL BE EQUIPPED WITH GAUGES WHICH CAN MEASURE THE INJECTION PRESSURE AND VOLUME.
   - B. EQUIPMENT CALIBRATION PROCEDURES AND SCHEDULE.
   - C. MATERIALS TO BE USED (INCLUDING MANUFACTURER DATA SHEETS).
     1. CAPPING MATERIAL
     2. EPOXY ADHESIVE (TYPE TO BE APPROPRIATE FOR CRACK SIZES TO BE INJECTED).
   - D. PORT SPACING
     1. PORT SPACING SHALL NOT BE LESS THAN THE THICKNESS OF THE CONCRETE IN THAT LOCATION.
   - E. INJECTION SEQUENCE
     1. INJECTION SHALL PROCEED FROM LOWER END OF CRACK ALONG ADJACENT PARTS.
     2. SKIPPING OF PORTS DURING INJECTION SHALL NOT BE ALLOWED.
4) THE CONTRACTOR SHALL HAVE THE MANUFACTURER'S INSTRUCTIONS FOR PROPORTIONING AND MIXING AVAILABLE AT THE JOB SITE AT ALL TIMES AND SHALL ENSURE THAT THE EQUIPMENT IS SUPPLYING THE MIXED ADHESIVE IN THE CORRECT PROPORTIONS.
5) TO ENSURE PROPER MIXING AND PROPORTIONING, SAMPLES SHALL BE TAKEN FROM THE INJECTOR HEAD AT THE START OF EACH WORKDAY AND EACH TIME THE ADHESIVE RESERVOIRS ARE REFILLED. THE SAMPLES SHALL BE IN A TEST CUP. THE SAMPLE SHALL BE MONITORED TO ENSURE THAT THE CURE TIME IS IN COMPLIANCE WITH THE MANUFACTURER'S DATA SHEETS. IF THE SAMPLES DO NOT CURE IN THE SPECIFIED TIME THEN THE EQUIPMENT USED TO PRODUCE THE SAMPLE SHALL NOT BE USED UNTIL THE PROBLEM IS CORRECTED.
6) CORE SAMPLES SHALL BE TAKEN AS VERIFICATION OF THE QUALITY OF WORK. THE CONTRACTOR SHALL TAKE ONE (1) ONE (1) INCH DIAMETER (FULL DEPTH OF CONCRETE AT LOCATION CORED) CORE SAMPLE STARTING WITH THE FIRST REPAIR LOCATION THEN EVERY THIRD REPAIR LOCATION AFTERWARDS. WORK SHALL NOT PROCEED UNTIL THE CORE SAMPLE IS TAKEN AND ACCEPTED. ALL CORE SAMPLES AND HOLES SHALL BE INDEXED FOR FUTURE REFERENCE. THE ENGINEER SHALL DESIGNATE ALL LOCATIONS TO BE CORED. IF ANY CORES SHOW UNACCEPTABLE RESULTS, ALL WORK SHALL BE STOPPED UNTIL THE CONTRACTOR SUBMITS A PROPOSAL FOR CORRECTING UNACCEPTABLE WORK.
7) THE INITIAL CORE WILL ALSO SERVE TO QUALIFY THE FOREMAN FOR THIS WORK. IF AT ANY TIME A NEW FOREMAN IS USED, HE SHALL BE QUALIFIED WITH A CORE SAMPLE.
8) THE CONTRACTOR, AT HIS EXPENSE, SHALL REPAIR ALL CORE HOLES WITH AN APPROVED CEMENTITIOUS PATCHING MATERIAL.
9) CORE SAMPLES SHALL BE VISUALLY INSPECTED TO CONFIRM THAT CRACKS ARE COMPLETELY FILLED WITH ADHESIVE. ANY CORE HAVING LESS THAN 95% OF THE CRACK FILLED WITH ADHESIVE SHALL BE CONSIDERED UNACCEPTABLE AND BE REJECTED.
10) CORE SAMPLES SHALL BE TESTED FOR BOND STRENGTH. SAMPLES MAY BE FRACTURED BY HAMMER BLOW TO CRACK AREA OR THROWN AT A HARD SURFACE. IF ADHESIVE FAILURE OCCURS BEFORE CONCRETE FAILURE, THE CORE SHALL BE CONSIDERED UNACCEPTABLE AND REJECTED.
11) PAYMENT FOR EPOXY INJECTION CRACK REPAIR SHALL BE MADE UNDER ITEM NUMBERS 604-10.62, EPOXY INJECTION REPAIR (COMPLETE AND IN PLACE), L.F. AND 604-10.58, EPOXY INJECTION (INJECTION), GAL.
12) PRICE BID FOR ITEM NUMBER 604-10.62, EPOXY INJECTION REPAIR (COMPLETE AND IN PLACE), L.F., SHALL INCLUDE COST OF ALL LABOR AND MATERIALS (EXCEPT ADHESIVE) FOR GRINDING FOR SURFACE PREPARATION, CRACK PREPARATION, CAPPING, INJECTION OF ADHESIVE, ALL SAMPLING AND TESTING, REMOVAL OF CAPPING MATERIAL AND PORTS, AND OTHER INCIDENTALS. CRACKS SHALL BE MEASURED FOR PAYMENT ALONG THE LENGTH OF THE VISIBLE SURFACE CRACK.
13) PRICE BID FOR ITEM NUMBER 604-10.58, EPOXY INJECTION (INJECTION), GAL., SHALL INCLUDE COST FOR ADHESIVE MATERIAL INJECTED ONLY.
14) NO PAYMENT SHALL BE MADE FOR REWORK DEEMED NECESSARY BY FAILURE OF ADHESIVE SAMPLES OR CORE SAMPLES.
15) ALL WORK INCLUDING SAMPLING AND TESTING SHALL BE IN THE PRESENCE OF THE ENGINEER OR HIS REPRESENTATIVE OR CONTRACT INSPECTORS. ANY WORK DONE WITHOUT INSPECTORS PRESENT SHALL NOT BE PAID FOR. THE CONTRACTOR SHALL PROVIDE THE ENGINEER WITH WEEKLY SCHEDULES OF WORK TO BE PERFORMED. SCHEDULES SHALL BE SUBMITTED AT LEAST THREE (3) DAYS IN ADVANCE OF WORK TO BE DONE. THE ENGINEER SHALL BE NOTIFIED OF ANY CHANGE IN THE SCHEDULE A MINIMUM OF TWENTY-FOUR (24) HOURS IN ADVANCE OF CHANGE.

PROJECT NO.	YEAR	SHEET NO.
60015-4204-04	2016	2A

REVISIONS

NO.	DATE	BY	BRIEF DESCRIPTION

STATE OF TENNESSEE
DEPARTMENT OF TRANSPORTATION

BRIDGE NOS. 1 & 2
BRIDGE GENERAL NOTES

STATE ROUTE 246
OVER CARTERS CREEK &
STATE ROUTE 246
OVER MAYHORN BRANCH
BR. NO. 60S61810003 &
BR. NO. 60S61810005
MAURY COUNTY
2016

BR-122-86

UNOFFICIAL SET

NOT FOR BIDDING

DESIGNED BY	VOLKERT	DATE	10/2015
DRAWN BY	C. DIXON	DATE	10/2015
SUPERVISED BY	J. ECKEL	DATE	09/2016
CHECKED BY	A. DAVIDSON	DATE	09/2016

VOLKERT

21-SEP-2016 23:48
535000 TDOT Bridge Repair\535003.17_SR246_over_MayhornBranch&_CartersCreek\DGN\Bridge\002A_CC_Gen.Notes.dgn

TYPE	YEAR	PROJECT NO.	SHEET NO.
CONST.	2016	60015-4204-04	2B

ESTIMATED ROADWAY QUANTITIES

	ITEM NO.	DESCRIPTION	CARTERS CREEK	MAYHORN BRANCH	UNIT	TOTAL QUANTITY
(1)	105-01	CONSTRUCTION STAKES, LINES AND GRADES	0.5	0.5	L.S.	1
	209-08.02	TEMPORARY SILT FENCE (WITH BACKING)	370	610	L.F.	980
	209-65.04	TEMPORARY IN STREAM DIVERSION	0	90	L.F.	90
	303-01	MINERAL AGGREGATE, TYPE A BASE, GRADING D	64	43	TON	107
	307-01.01	ASPHALT CONCRETE MIX (PG64-22) (BPMB-HM) GRADING A	12	11	TON	23
	307-01.08	ASPHALT CONCRETE MIX (PG64-22) (BPMB-HM) GRADING B-M2	6	6	TON	12
	402-01	BITUMINOUS MATERIAL FOR PRIME COAT (PC)	0.1	0.09	TON	1
	402-02	AGGREGATE FOR COVER MATERIAL (PC)	0.4	0.3	TON	1
	403-01	BITUMINOUS MATERIAL FOR TACK COAT (TC)	0.17	0.16	TON	1
	411-01.10	ACS MIX (PG64-22) GRADING D	24	20	TON	44
(2)	415-01.02	COLD PLANING BITUMINOUS PAVEMENT	293	253	S.Y.	546
	705-01.01	GUARDRAIL AT BRIDGE ENDS	108	81	L.F.	189
	705-02.02	SINGLE GUARDRAIL (TYPE 2)	103	228	L.F.	331
	705-04.04	GUARDRAIL TERMINAL (TYPE 21)	1	0	EACH	1
	705-04.05	GUARDRAIL TERMINAL (TYPE-IN-LINE)	1	0	EACH	1
(3)	705-04.07	TAN ENERGY ABSORBING TERM (NCHRP 350, TL3)	3	3	EACH	6
	705-04.09	EARTH PAD FOR TYPE 38 GR END TREATMENT	3	3	EACH	6
	705-04.50	PORTABLE BARRIER RAIL DELINEATOR	9	9	EACH	18
	705-08.51	PORTABLE IMPACT ATTENUATOR NCHRP350 TL-3	2	2	EACH	4
(4)	712-01	TRAFFIC CONTROL	0.5	0.5	L.S.	1
(5)(6)	712-02.02	INTERCONNECTED PORTABLE BARRIER RAIL	320	310	L.F.	630
(7)	712-04.01	FLEXIBLE DRUMS (CHANNELIZING)	34	26	EACH	60
	712-05.01	WARNING LIGHTS (TYPE A)	34	26	EACH	60
	712-06	SIGNS (CONSTRUCTION)	366	352	S.F.	718
	712-09.01	REMOVABLE PAVEMENT MARKING LINE	1420	1210	L.F.	2630
	712-09.04	REMOVABLE PAVEMENT MARKING (STOP LINE)	42	20	L.F.	62
	706-01	GUARDRAIL REMOVED	0	820	L.F.	820
	716-01.21	SNWPWBLE PVMT MRKRS (BI-DIR)(1 COLOR)	4	3	EACH	7
(8)	716-13.01	SPRAY THERMO PVMT MRKNG (60 mil) (4IN LINE)	0.2	0.2	L.M.	0.4
	717-01	MOBILIZATION	0.5	0.5	L.S.	1
	730-40	TEMPORARY TRAFFIC SIGNAL SYSTEM	1	1	EACH	2

FOOTNOTES

(1) ALL DIMENSIONAL DETAILS SHOWN ON PLANS, INCLUDING ELEVATIONS, SHALL BE CHECKED BY THE CONTRACTOR TO ASSURE ACCURACY OF THE LAYOUT PRIOR TO CONSTRUCTION. ALL BRIDGE SUBSTRUCTURES SHALL BE CHECKED AS TO LOCATION, DIMENSIONAL LAYOUTS AND ELEVATIONS. BY MEANS OF TWO INDEPENDENT LAYOUT METHODS. ANY ERRORS AND APPARENT DISCREPANCIES FOUND IN PREVIOUS SURVEYS, OR IN EITHER THE SPECIFICATIONS OR SPECIAL PROVISIONS, SHALL BE CALLEDTO THE ENGINEER'S ATTENTION BY THE CONTRACTOR IMMEDIATELY AND PRIOR TO PROCEEDING WITH WORK.

(2) DEPTH VARIES FROM 0" TO 1 1/4" IN ALL AREAS NECESSARY FOR CONSTRUCTION OF ASPHALT TRANSITIONS. TWO SEPARATE PASSES ARE REQUIRED STARTING FROM THE 1 1/4" SAWCUTS SHOWN IN THE PAVEMENT TRANSITION DETAIL ON SHEET 2D.

(3) THIS ITEM SHALL BE A PORTABLE ENERGY ABSORBING TERMINAL MEETING THE REQUIREMENTS OF NCHRP 350 FOR TEST LEVEL 3. EXAMPLES WOULD BE A QUAD-GUARD, A REACT 350 OR A TRACC. THE PAY ITEM WILL INCLUDE FURNISHING AND INTALLING ALL COMPONENTS AS SHOWN ON THE MANUFACTURER'S DRAWING.

(4) INCLUDES COST FOR REMOVAL OF EXISTING OR CONFLICTING MARKINGS.

(5) BOLTING PORTABLE BARRIER RAIL TO BRIDGE DECK IS NOT REQUIRED.

(6) ITEM INCLUDES ALL COSTS NECESSARY FOR THE INITIAL INSTALLATION FOR PHASE I TRAFFIC CONTROL AND REMOVAL AND RESET FOR PHASE II TRAFFIC CONTROL.

(7) INCLUDES RELOCATION AND INSTALLATION FOR EACH PHASE OF THE CONSTRUCTION SEQUENCE: PHASE I=20 AND PHASE II=14 ON BRIDGE 1 ON STATE ROUTE 246; PHASE I=12 AND PHASE II=14 ON BRIDGE 2 ON STATE ROUTE 246.

(8) CONTRACTOR MAY ELECT TO SUBSTITUTE PREFORMED PLASTIC FOR THERMOPLASTIC. PREFORMED PLASTIC SHALL BE PAID FOR AT THE SAME UNIT PRICE AS BID FOR THERMOPLASTIC.

ESTIMATED GUARDRAIL QUANTITIES

LOCATION	SHEET NO.	705-01.01 GUARDRAIL AT BRIDGE ENDS (L.F.)	705-02.02 SINGLE GUARDRAIL (TYPE 2) (L.F.)	705-04.04 GUARDRAIL TERM. (TYPE 21) (EACH)	705-04.05 GUARDRAIL TERM. ANCHOR (TYPE IN-LINE) (EACH)	705-04.07 TAN ENERGY ABSORB. TERM. (NCHRP 350, TL3) (EACH)
BRIDGE 1						
STA. 56+91.00 TO STA. 57+76.00 (L)	3	26'-10 ¾"				1
STA. 58+81.00 TO STA. 59+63.00 (L)	3	26'-10 ¾"	103'	1	1	
STA. 57+18.00 TO STA. 57+92.00 (R)	3	26'-10 ¾"				1
STA. 59+05.00 TO STA. 59+82.00 (R)	3	26'-10 ¾"				1
BRIDGE 2						
STA. 124+27.00 TO STA. 125+83.00 (R)	3A	26'-10 ¾"	76'			1
STA. 124+46.00 TO STA. 125+97.00 (L)	3A	26'-10 ¾"	76'			1
STA. 126+75.00 TO STA. 128+32.00 (L)	3A	26'-10 ¾"	76'			1
TOTAL		188'-3 ¼"	331'	1	1	6

ESTIMATED PAVING QUANTITIES

LOCATION	SHEET NO.	MINERAL AGGREGATE TYPE A BASE GRADING D (TONS) 303-01	ASHPALT CONCRETE MIX (PG64-22) (BPMB-HM) GRADING A (TONS) 307-01.01	ASHPALT CONCRETE MIX (PG64-22) (BPMB-HM) GRADING B-M2 (TONS) 307-01.08	ACS MIX (PG64-22) GRADING D (TONS) 411-01.10	BITUMINOUS MATERIAL FOR TACK COAT (TC) (TONS) 403-01	BITUMINOUS MATERIAL FOR PRIME COAT (PC) (TONS) 402-01	AGGREGATE FOR COVER MATERIAL (PC) (TONS) 402-02
BRIDGE 1								
STA. 57+20.00 TO STA. 57+82.00	3	32	6	3	11	0.08	0.05	0.2
STA. 58+91.00 TO STA. 59+65.00	3	32	6	3	13	0.09	0.05	0.2
BRIDGE 2								
STA. 125+30.00 TO STA. 126+00.00	3A	32	6	3	10	0.08	0.05	0.2
STA. 126+63.00 TO STA. 127+26.00	3A	11	5	3	10	0.08	0.04	0.1
TOTAL		107	23	12	44	0.33	0.19	0.7

SEALED BY

UNOFFICIAL SET

NOT FOR BIDDING

STATE OF TENNESSEE
DEPARTMENT OF TRANSPORTATION

ESTIMATED ROADWAY QUANTITIES, AND TABULATED QUANTITIES

9/21/2016 4:16:44 AM
c:\volkert_pw_workingdir\krystle.bratton\dms17068\2B-Carters Creek & Mayhorn Branch_Estimated Roadway Quantities.dgn

TYPE	YEAR	PROJECT NO.	SHEET NO.
CONST.	2016	60015-4204-04	2C

GENERAL NOTES

GRADING

1) ANY AREA THAT IS DISTURBED OUTSIDE LIMITS OF CONSTRUCTION DURING THE LIFE 0F THIS PROJECT SHALL BE REPAIRED BY THE CONTRACTOR AT HIS EXPENSE.

2) CERTIFICATION FOR ALL BORROW PITS MUST BE OBTAINED IN ACCORDANCE WITH SUBSECTION 107.06 OF THE STANDARD SPECIFICATIONS.

3) THE CONTRACTOR SHALL NOT DISPOSE OF ANY MATERIAL EITHER ON OR OFF STATE-OWNED R.O.W. IN A REGULATORY FLOOD WAY AS DEFINED BY THE FEDERAL EMERGENCY MANAGEMENT AGENCY WITHOUT APPROVAL BY SAME. ALL MATERIAL SHALL BE DISPOSED OF IN UPLAND (NON-WETLAND) AREAS AND ABOVE ORDINARY HIGH WATER OF ANY ADJACENT WATERCOURSE. THIS DOES NOT ELIMINATE THE NEED TO OBTAIN ANY OTHER LICENSES OR PERMITS THAT MAY BE REQUIRED BY ANY OTHER FEDERAL, STATE OR LOCAL AGENCY.

SEEDING AND SODDING

4) ITEM NO. 801-02, SEEDING (WITHOUT MULCH) AND EROSION CONTROL BLANKET , SHALL BE PLACED AT LOCATIONS SHOWN ON THE PLANS AS WELL AS LOCATIONS DIRECTED BY THE ENGINEER.

GUARDRAIL

5) THE CONTRACTOR SHALL NOT REMOVE ANY SECTIONS OF EXISTING GUARDRAIL TO REWORK SHOULDERS OR FLATTEN SLOPES UNTIL THE ENGINEER CONCURS IN THE NECESSITY OF REMOVAL DUE TO CONSTRUCTION REQUIREMENTS AND THE APPROPRIATE WARNING DEVICES ARE INSTALLED. THE PROPOSED GUARDRAIL, INCLUDING ANY ANCHOR SYSTEM, SHALL BE INSTALLED QUICKLY TO MINIMIZE TRAFFIC EXPOSURE TO ANY HAZARD. NO PAYMENT WILL BE MADE FOR A SECTION OF PROPOSED GUARDRAIL, INCLUDING ANCHORS, UNTIL IT IS COMPLETE IN PLACE.

6) THE PROPOSED GUARDRAIL, INCLUDING ANY ANCHOR SYSTEM, SHALL BE INSTALLED QUICKLY TO MINIMIZE TRAFFIC EXPOSURE TO ANY HAZARD. NO PAYMENT WILL BE MADE FOR A SECTION OF PROPOSED GUARDRAIL, INCLUDING ANCHORS, UNTIL IT IS COMPLETE IN PLACE.

7) IF ANY APPROACH END OF A SECTION OF GUARDRAIL OR BRIDGE RAIL MUST TEMPORARILY BE LEFT INCOMPLETE AND EXPOSED TO TRAFFIC, THE CONTRACTOR SHALL USE TWO (2) TEMPORARY BARRICADES OR DRUMS WITH TYPE A LIGHTS AND ROUNDED END ELEMENTS AS MINIMUM MEASURES TO PROTECT TRAFFIC FROM THE HAZARD OF AN EXPOSED END. ALL COST OF FURNISHING AND INSTALLING A TEMPORARY ROUNDED END ELEMENT SHALL BE INCLUDED IN THE COST OF THE PROPOSED GUARDRAIL.

MISCELLANEOUS

8) THE CONTRACTOR SHALL BE REQUIRED TO REMOVE AND RESET MAILBOXES WHERE AND AS DIRECTED BY THE ENGINEER.

9) NOTHING IN THE GENERAL NOTES OR SPECIAL PROVISIONS SHALL RELIEVE THE CONTRACTOR FROM HIS RESPONSIBILITIES TOWARD THE SAFETY AND CONVENIENCE OF THE GENERAL PUBLIC AND THE RESIDENTS ALONG THE PROPOSED CONSTRUCTION AREA

PAVEMENT MARKINGS

TEMPORARY PAVEMENT MARKING ON INTERMEDIATE LAYERS

10) TEMPORARY PAVEMENT LINE MARKINGS ON INTERMEDIATE LAYERS OF PAVEMENT SHALL BE REFLECTIVE TAPE OR REFLECTORIZED PAINT INSTALLED TO PERMANENT STANDARDS AT THE END OF EACH DAYS WORK. SHORT, UNMARKED SECTIONS SHALL NOT BE ALLOWED. THESE MARKINGS WILL BE MEASURED AND PAID FOR UNDER ITEM NO. 716-05.01, PAINTED PAVEMENT MARKING (4" LINE), L.M.

FINAL PAVEMENT MARKING IF 4" SPRAY THERMOPLASTIC (60 mil) IS USED

11) PERMANENT PAVEMENT LINE MARKINGS SHALL BE 4" SPRAY THERMOPLASTIC (60 mil) INSTALLED TO PERMANENT STANDARDS AT THE END OF EACH DAY'S WORK. SHORT UNMARKED SECTIONS SHALL NOT BE ALLOWED. PAVEMENT MARKINGS WILL BE MEASURED AND PAID FOR UNDER ITEM NO. 716-13.01, SPRAY THERMO PVMT MRKNG (60 mil) (4IN LINE), L.M. THE CONTRACTOR SHALL HAVE THE OPTION OF USING REFLECTORIZED PAINT INSTALLED TO PERMANENT STANDARDS AT THE END OF EACH DAY'S WORK AND THEN INSTALLING THE PERMANENT MARKINGS AFTER THE PAVING OPERATION IS COMPLETED. THE TEMPORARY MARKINGS FOR THE FINAL SURFACE WILL NOT BE MEASURED AND PAID FOR DIRECTLY, BUT THE COSTS ARE TO BE INCLUDED IN THE PRICE BID FOR THE PERMANENT MARKINGS.

DETOURS, LANE SHIFTS AND MEDIAN CROSS-OVERS

12) BEFORE OPENING THE LANE SHIFTS TO TRAFFIC, THE TRANSITIONAL MARKINGS ON THE EXISTING ROADWAY MUST BE IN PLACE. ALL EXISTING MARKINGS IN THE AREA OF THESE TRANSITIONAL MARKINGS SHALL BE OBLITERATED AND ALL EXISTING RAISED PAVEMENT MARKERS SHALL BE REMOVED TO ELIMINATE CONFLICTING MARKINGS. REMOVAL OF THE EXISTING CONFLICTING MARKINGS AND RAISED PAVEMENT MARKERS WILL NOT BE MEASURED AND PAID FOR DIRECTLY, BUT THE COST WILL BE INCLUDED IN ITEM NO. 712-01 TRAFFIC CONTROL, LUMP SUM.

PAVEMENT

PAVING

13) THE CONTRACTOR SHALL BE REQUIRED TO COLD PLANE AND PAVE IN THE DIRECTION OF TRAFFIC.

EROSION PREVENTION AND SEDIMENT CONTROL

DISTURBED AREA

14) AREAS TO BE UNDISTURBED SHALL BE CLEARLY MARKED IN THE FIELD BEFORE CONSTRUCTION ACTIVITIES BEGIN. THE TOTAL AREA TO BE DISTURBED NOT INCLUDING EXCLUSIVE BORROW/WASTE AREAS AND STAGING AREAS IS 0.74 ACRES. IF THE TOTAL DISTURBED AREA FOR THE PROJECT SITE (INCLUDING STAGING AND EXCLUSIVE WASTE/BORROW AREAS) INCREASES TO MORE THAN 1ACRE, THEN THE NATURAL RESOURCES OFFICE OF THE ENVIRONMENTAL DIVISION MUST BE NOTIFIED SO THAT A SWPPP CAN BE PREPARED.

15) PRE-CONSTRUCTION VEGETATIVE GROUND COVER SHALL NOT BE DESTROYED, REMOVED OR DISTURBED (I.E. CLEARING AND GRUBBING INITIATED) MORE THAN 15 CALENDAR DAYS PRIOR TO GRADING OR EARTH MOVING ACTIVITIES UNLESS THE AREA IS MULCHED, SEEDED WITH MULCH, OR OTHER TEMPORARY COVER IS INSTALLED.

16) CLEARING, GRUBBING, AND OTHER DISTURBANCE TO RIPARIAN VEGETATION SHALL BE LIMITED TO THE MINIMUM NECESSARY FOR SLOPE CONSTRUCTION AND EQUIPMENT OPERATIONS. EXISTING VEGETATION SHOULD BE PRESERVED TO THE MAXIMUM EXTENT POSSIBLE. UNNECESSARY VEGETATION REMOVAL IS PROHIBITED.

17) ALL DISTURBED AREAS SHALL BE PROPERLY STABILIZED AS SOON AS PRACTICABLE. PRIORITY SHALL BE GIVEN TO FINISHING OPERATIONS AND PERMANENT EPSC MEASURES OVER TEMPORARY EPSC MEASURES ON ALL PROJECTS.

18) CONSTRUCTION SHALL BE SEQUENCED AND STAGED TO MINIMIZE THE EXPOSURE TIME OF GRADED OR DENUDED SOIL AREAS, PRESERVE TOPSOIL, AND MINIMIZE SOIL COMPACTION.

SEDIMENT CONTROL

19) EPSC MEASURES SHALL BE INSTALLED AND FUNCTIONAL PRIOR TO ANY EARTH MOVING OPERATIONS, AND SHALL BE MAINTAINED THROUGHOUT THE CONSTRUCTION PERIOD.

20) THE CONTRACTOR SHALL ESTABLISH AND MAINTAIN A PROACTIVE METHOD TO PREVENT THE OFF-SITE MIGRATION OR DEPOSIT OF SEDIMENT ON ROADWAYS USED BY THE GENERAL PUBLIC. IF SEDIMENT ESCAPES THE CONSTRUCTION SITE, OFF-SITE ACCUMULATIONS OF SEDIMENT THAT HAVE NOT REACHED A STREAM MUST BE REMOVED AT A FREQUENCY SUFFICIENT TO MINIMIZE OFF-SITE IMPACTS (E.G., FUGITIVE SEDIMENT THAT HAS ESCAPED THE CONSTRUCTION SITE AND HAS COLLECTED IN A STREET MUST BE REMOVED SO THAT IT IS NOT SUBSEQUENTLY WASHED INTO STORM SEWERS AND STREAMS BY THE NEXT RAIN AND/OR SO THAT IT DOES NOT POSE A SAFETY HAZARD TO USERS OF PUBLIC STREETS). ARRANGEMENTS CONCERNING REMOVAL OF SEDIMENT ON ADJOINING PROPERTY MUST BE SETTLED WITH THE ADJOINING PROPERTY OWNER BEFORE REMOVAL OF SEDIMENT.

21) WATER PUMPED FROM WORK AREAS AND EXCAVATION MUST BE HELD IN SETTLING BASINS OR TREATED BY FILTRATION OR CHEMICAL TREATMENT PRIOR TO ITS DISCHARGE INTO SURFACE WATERS. ALL PHYSICAL AND/OR CHEMICAL TREATMENT WILL BE APPLIED IN ACCORDANCE WITH MANUFACTURER'S GUIDELINES AND FULLY DESCRIBED IN THE EPSC PLANS. WATER MUST BE HELD IN SETTLING BASINS UNTIL AT LEAST AS CLEAR AS THE RECEIVING WATERS. SETTLING BASINS SHALL NOT BE LOCATED CLOSER THAN 20 FEET FROM THE TOP BANK OF A STREAM. SETTLING BASINS AND SEDIMENT TRAPS SHALL BE PROPERLY DESIGNED ACCORDING TO THE SIZE OF THE DRAINAGE AREAS OR VOLUME OF WATER TO BE TREATED. TREATED WATER MUST BE DISCHARGED THROUGH A PIPE OR WELL-VEGETATED OR LINED CHANNEL, SO THAT THE DISCHARGE DOES NOT CAUSE EROSION OR SEDIMENT TRANSPORT. DISCHARGES FROM BASINS AND IMPOUNDMENTS SHALL UTILIZE OUTLET STRUCTURES THAT ONLY WITHDRAW WATER FROM NEAR THE SURFACE OF THE BASIN OR IMPOUNDMENT. DISCHARGES MUST NOT CAUSE AN OBJECTIONABLE COLOR CONTRAST WITH THE RECEIVING STREAM.

22) OFFSITE VEHICLE TRACKING OF SEDIMENTS AND THE GENERATION OF DUST SHALL BE MINIMIZED. A STABILIZED CONSTRUCTION ACCESS (A POINT OF ENTRANCE/EXIT TO THE CONSTRUCTION PROJECT) SHALL BE PROVIDED, AS NEEDED, TO REDUCE THE TRACKING OF MUD AND DIRT ONTO PUBLIC ROADS BY CONSTRUCTION VEHICLES.

23) TEMPORARY EPSC MEASURES MAY BE REMOVED AT THE BEGINNING OF THE WORKDAY, BUT MUST BE REPLACED AT THE END OF THE WORKDAY.

STREAM

24) SOIL MATERIALS MUST BE PREVENTED FROM ENTERING WATERS OF THE STATE/U.S. EPSC MEASURES TO PROTECT WATER QUALITY MUST BE MAINTAINED THROUGHOUT THE CONSTRUCTION PERIOD. APPROPRIATE EPSC MEASURES MUST BE INSTALLED ALONG THE BASE OF ALL FILLS AND CUTS, ON THE DOWNHILL SIDE OF STOCKPILED SOIL, AND ALONG STREAM BANKS IN CLEARED AREAS TO PREVENT SEDIMENT MIGRATION INTO STREAMS IN ACCORDANCE WITH TDOT STANDARDS. THEY MUST BE INSTALLED ON THE CONTOUR, ENTRENCHED AND STAKED, AND EXTEND THE WIDTH OF THE AREA TO BE CLEARED.

25) INSTREAM EPSC DEVICES REQUIRE THE ENVIRONMENTAL DIVISION'S PERMITS SECTION REVIEW AND MUST BE PROCESSED BY THE PERMITS SECTION TO OBTAIN TDEC, USACE, AND TVA PERMITS.

26) THE OPERATION OF EQUIPMENT IN WATERS OF THE STATE/U.S., INCLUDING WETLANDS, SHALL BE ONLY AS SHOWN ON THE PROJECT PLANS AND/OR AS SO SPECIFIED IN THE ARAP/401, SECTION 404 PERMIT(S) AND/OR TVA26(A), IF APPLICABLE. ANY ADDITIONAL PERMITS REQUIRED BY THE CONTRACTOR'S METHOD OF OPERATION SHALL BE THE RESPONSIBILITY OF THE CONTRACTOR TO OBTAIN, AFTER RECEIVING THE APPROVAL OF TDOT ENVIRONMENTAL DIVISION.

27) THE WIDTH OF THE FILL ASSOCIATED WITH TEMPORARY CROSSINGS SHALL BE LIMITED TO THE MINIMUM NECESSARY FOR THE ACTUAL CROSSING.

28) STREAM BEDS SHALL NOT BE USED AS TRANSPORTATION ROUTES FOR CONSTRUCTION EQUIPMENT. TEMPORARY CROSSINGS MUST BE LIMITED TO ONE POINT PER STREAM AND EPSC MEASURES MUST BE USED WHERE THE STREAM BANKS ARE DISTURBED. WHERE THE STREAMBED IS NOT COMPOSED OF BEDROCK, A PAD OF CLEAN ROCK MUST BE USED AT THE CROSSING POINT AND CULVERTED TO PREVENT THE IMPOUNDMENT OF WATER FLOW. CLEAN ROCK IS ROCK OF VARIOUS TYPE AND SIZE, DEPENDING UPON APPLICATION, WHICH CONTAINS NO FINES, SOILS, OR OTHER WASTES OR CONTAMINANTS. OTHER MATERIALS USED FOR ALL TEMPORARY FILLS MUST BE COMPLETELY REMOVED IN THEIR ENTIRETY AFTER THE WORK IS COMPLETED AND THE AFFECTED AREAS RETURNED TO THEIR PREEXISTING ELEVATION. ALL TEMPORARY CROSSINGS MUST BE CONSTRUCTED IN ACCORDANCE WITH STD. DWG. EC-STR-25 UNLESS SPECIFICALLY ADDRESSED IN THE EPSC PLANS. ALTERNATIVELY, PLACING A TEMPORARY BRIDGE (BAILEY BRIDGE OR EQUIVALENT, TIMBERS, ETC.) FROM TOP OF BANK TO TOP OF BANK OR THE APPROPRIATE USE OF BARGES AT THE CROSSING TO AVOID DISTURBANCE OF THE STREAMBED IS AN ACCEPTABLE OPTION.

INSPECTION, MAINTENANCE, REPAIR

29) EPSC CONTROLS WILL BE MAINTAINED IN ACCORDANCE WITH TDOT STANDARD DRAWINGS AND GOOD ENGINEERING PRACTICES.

30) INSPECTION, REPAIR, AND MAINTENANCE OF EPSC MEASURES/STRUCTURES IS TO BE PERFORMED ON A REGULAR BASIS. SEDIMENT SHALL BE REMOVED FROM SEDIMENT CONTROL STRUCTURES WHEN THE DESIGN CAPACITY HAS BEEN REDUCED BY FIFTY PERCENT (50%). DURING SEDIMENT REMOVAL, THE CONTRACTOR SHALL TAKE CARE TO ENSURE THAT STRUCTURAL COMPONENTS OF EPSC MEASURES ARE NOT DAMAGED AND THUS MADE INEFFECTIVE. IF DAMAGE DOES OCCUR, THE CONTRACTOR SHALL REPAIR THE STRUCTURES AT THE CONTRACTOR'S OWN EXPENSE.

UNOFFICIAL SET

NOT FOR BIDDING

STATE OF TENNESSEE
DEPARTMENT OF TRANSPORTATION

ROADWAY GENERAL NOTES

9/21/2016 3:20:25 AM
c:\volkert_pw_workingdir\krystle.bratton\dms17068\2C-Carters Creek & Mayhorn Branch_GeneralNotes.dgn

TYPE	YEAR	PROJECT NO.	SHEET NO.
CONST.	2016	60015-4204-04	2C1

GENERAL NOTES

INSPECTION, MAINTENANCE, REPAIR

(31) SEDIMENT REMOVED FROM SEDIMENT CONTROL STRUCTURES SHALL BE PLACED AND BE TREATED IN A MANNER SO THAT THE SEDIMENT IS CONTAINED WITHIN THE PROJECT LIMITS AND DOES NOT MIGRATE INTO WATERS OF THE STATE/U.S. COST FOR THIS TREATMENT IS TO BE INCLUDED IN PRICE BID FOR ITEM NO. 209-05 SEDIMENT REMOVAL, C.Y.

(32) DISCHARGE POINTS SHALL BE INSPECTED TO ASCERTAIN WHETHER EPSC MEASURES ARE EFFECTIVE IN PREVENTING SIGNIFICANT IMPACTS TO SURROUNDING WATERS. WHERE DISCHARGE LOCATIONS ARE INACCESSIBLE, NEARBY DOWNSTREAM LOCATIONS SHALL BE INSPECTED. LOCATIONS WHERE VEHICLES ENTER AND EXIT THE SITE SHALL BE INSPECTED FOR EVIDENCE OF OFF-SITE ROADWAY SEDIMENT.

(33) THE TDOT PROJECT SUPERVISOR (OR THEIR DESIGNEE) AND THE CONTRACTOR'S SITE SUPERINTENDENT ARE RESPONSIBLE FOR INSPECTIONS. MAINTENANCE AND REPAIR ACTIVITIES ARE THE RESPONSIBILITY OF THE CONTRACTOR.

(34) EPSC MEASURES FOUND TO BE INEFFECTIVE SHALL BE REPAIRED, REPLACED, OR MODIFIED BEFORE THE NEXT RAIN EVENT IF POSSIBLE.

MATERIALS & STAGING

(35) WASTE AND BORROW AREAS SHALL BE LOCATED IN NON-WETLAND AREAS AND ABOVE THE 100-YEAR, FEDERAL EMERGENCY MANAGEMENT AGENCY FLOODPLAIN. BORROW AND WASTE DISPOSAL AREAS SHALL NOT AFFECT ANY WATERS OF THE STATE/U.S. UNLESS THESE AREAS ARE SPECIFICALLY COVERED BY AN ARAP, 404, OR NPDES PERMIT, OBTAINED SOLELY BY THE CONTRACTOR.

(36) THE CONTRACTOR SHALL BE SOLELY RESPONSIBLE FOR AND OBTAIN ANY NECESSARY ENVIRONMENTAL PERMITS OR APPROVALS, INCLUDING BUT NOT LIMITED TO ARCHAEOLOGY, ECOLOGY, HISTORICAL, HAZARDOUS MATERIALS, AIR AND NOISE, TDEC ARAP/401, USACE SECTION 404, TVA SECTION 26A, AND TDEC NPDES PERMITS, FROM FEDERAL, STATE AND/OR LOCAL AGENCIES REGARDING ANY STAGING AREAS TO BE USED. ANY SUCH PERMITS SHALL BE SUPPLIED TO THE TDOT PROJECT RESPONSIBLE PARTY PRIOR TO THE USE OF THE PERMITTED AREAS.

PERMITS, PLANS, RECORDS

(37) THE CONTRACTOR SHALL BE SOLELY RESPONSIBLE FOR AND OBTAIN ANY NECESSARY ENVIRONMENTAL PERMITS OR APPROVALS, INCLUDING BUT NOT LIMITED TO TDEC ARAP/401, USACE SECTION 404, TVA SECTION 26A, AND TDEC NPDES PERMITS, FROM FEDERAL, STATE AND/OR LOCAL AGENCIES REGARDING THE OPERATION OF ANY PROJECT-DEDICATED ASPHALT AND/OR CONCRETE PLANTS.

(38) ANY DISAGREEMENT BETWEEN THE PROJECT PLANS, THE PROJECT AS CONSTRUCTED, AND THE PERMIT(S) ISSUED FOR THE PROJECT, SHALL BE BROUGHT TO THE ATTENTION OF THE TDOT PROJECT ENGINEER. THE ENVIRONMENTAL DIVISION, ROADWAY DESIGN DIVISION, AND HEADQUARTERS CONSTRUCTION OFFICE SHALL BE CONTACTED IN THESE INSTANCES AND DECIDE WHICH HAS PRECEDENCE AND WHETHER PERMIT OR PLANS REVISIONS ARE NEEDED. IN GENERAL, PERMIT CONDITIONS WILL PREVAIL.

(39) ALL PROJECT RELATED ENVIRONMENTAL PERMITS SHALL BE MAINTAINED AT OR NEAR THE PROJECT SITE.

(40) IF A CHANGE IN PROJECT SCOPE OCCURS DURING CONSTRUCTION, INCLUDING VALUE ENGINEERING, THE ENVIRONMENTAL DIVISION SHALL BE CONTACTED TO DETERMINE WHETHER PERMIT REVISIONS ARE NEEDED. THE ROADWAY DESIGN DIVISION SHALL BE CONTACTED TO DETERMINE IF ANY PLAN REVISIONS ARE NEEDED.

(41) THE EPSC PLAN SHALL BE UPDATED WHENEVER EPSC INSPECTIONS INDICATE, OR WHERE STATE OR FEDERAL OFFICIALS DETERMINE EPSC MEASURES ARE PROVING INEFFECTIVE IN ELIMINATING OR SIGNIFICANTLY MINIMIZING POLLUTANT SOURCES OR ARE OTHERWISE NOT ACHIEVING THE GENERAL OBJECTIVES OF CONTROLLING POLLUTANTS IN STORM WATER DISCHARGES ASSOCIATED WITH THE CONSTRUCTION ACTIVITY.

(42) THE TDOT PROJECT RESPONSIBLE PARTY (INCLUDING TDOT STAFF, CONSULTANTS, AND CONTRACTOR STAFF) RESPONSIBLE FOR THE IMPLEMENTATION AND MAINTENANCE OF EPSC PLANS SHALL SUCCESSFULLY COMPLETE THE TDEC "LEVEL 1 – FUNDAMENTALS OF EROSION PREVENTION AND SEDIMENT CONTROL FOR CONSTRUCTION SITES" COURSE AND ANY REFRESHER COURSES AS REQUIRED TO MAINTAIN CERTIFICATION. A COPY OF CERTIFICATION RECORDS FOR THE COURSES SHALL BE KEPT ON SITE AND AVAILABLE UPON REQUEST.

(43) THE EPSC PLAN IS TO SERVE AS AN INITIAL GUIDE FOR SITE PERSONNEL AS THE CONSTRUCTION PROCESS DEVELOPS. IT MUST BE AMENDED, MODIFIED, AND UPDATED WHENEVER A CHANGE IN THE DESIGN OR CONSTRUCTION OF THE PROJECT OCCURS. THE PHASES DEPICTED IN THE EPSC PLANS MAY NOT COINCIDE WITH THE ACTUAL PHASES OF CONSTRUCTION ESTABLISHED BY THE CONTRACTOR DURING CONSTRUCTION, THUS MODIFICATIONS WILL BE REQUIRED TO ENSURE THE EPSC PLAN IS MAINTAINED TO DEPICT CURRENT SITE CONDITIONS. IT SHOULD BE MAINTAINED SUCH THAT IT WILL ALWAYS REFLECT THE MEASURES THAT ARE INSTALLED DURING THE VARIOUS STAGES OF CONSTRUCTION. IT IS IMPRACTICAL TO DETERMINE ALL THE INTERMEDIATE PHASES OF CONSTRUCTION THAT WILL OCCUR, THUS THESE DOCUMENTS WILL HAVE TO BE UPDATED THROUGHOUT THE LIFE OF THE CONSTRUCTION PROJECT.

LITTER, DEBRIS, WASTE & PETROLEUM

(44) THE CONTRACTOR SHALL ESTABLISH AND MAINTAIN A PROACTIVE METHOD TO PREVENT LITTER, CONSTRUCTION DEBRIS, AND CONSTRUCTION WASTES FROM ENTERING WATERS OF THE STATE/U.S. THESE MATERIALS WILL BE PICKED UP AND REMOVED FROM STORMWATER EXPOSURE PRIOR TO ANTICIPATED STORM EVENTS. AFTER USE, MATERIALS USED FOR EPSC WILL BE REMOVED FROM THE SITE.

(45) THE CONTRACTOR SHALL TAKE APPROPRIATE STEPS TO ENSURE THAT PETROLEUM PRODUCTS OR OTHER CHEMICAL POLLUTANTS ARE PREVENTED TDOT - ROADWAY DESIGN GUIDELINES English Revised: 10/27/15 6-21 FROM ENTERING WATERS OF THE STATE/U.S. ALL EQUIPMENT REFUELING, SERVICING, AND STAGING AREAS SHALL COMPLY WITH ALL LOCAL, STATE, AND FEDERAL LAWS, RULES, REGULATIONS, AND ORDINANCES, INCLUDING THOSE OF THE NATIONAL FIRE PROTECTION ASSOCIATION (NFPA). APPROPRIATE CONTAINMENT MEASURES FOR THESE AREAS SHALL BE USED. ALL SPILLS MUST BE REPORTED TO THE APPROPRIATE AGENCY, AND MEASURES SHALL BE TAKEN IMMEDIATELY TO PREVENT THE POLLUTION OF WATERS OF THE STATE/U.S., INCLUDING GROUNDWATER, SHOULD A SPILL OCCUR.

(46) IF PORTABLE SANITARY FACILITIES ARE PROVIDED ON CONSTRUCTION SITES, SANITARY WASTE WILL BE COLLECTED FROM THE PORTABLE UNITS IN A TIMELY MANNER BY A LICENSED WASTE MANAGEMENT CONTRACTOR OR AS REQUIRED BY ANY LOCAL REGULATIONS. THE CONTRACTOR WILL OBTAIN ANY AND ALL NECESSARY PERMITS TO DISPOSE OF SANITARY WASTE.

(47) ALL HAZARDOUS WASTE MATERIALS WILL BE DISPOSED OF IN A MANNER WHICH IS COMPLIANT WITH LOCAL OR STATE REGULATIONS. SITE PERSONNEL WILL BE INSTRUCTED IN THESE PRACTICES, AND THE INDIVIDUAL DESIGNATED AS THE CONTRACTOR'S ON-SITE REPRESENTATIVE WILL BE RESPONSIBLE FOR SEEING THAT THESE PRACTICES ARE FOLLOWED. THE CONTRACTOR WILL OBTAIN ANY AND ALL NECESSARY PERMITS TO DISPOSE OF HAZARDOUS MATERIAL

(48) WASTE MATERIAL (EARTH, ROCK, ASPHALT, CONCRETE, ETC.) NOT REQUIRED FOR THE CONSTRUCTION OF THE PROJECT WILL BE DISPOSED OF BY THE CONTRACTOR. THE CONTRACTOR WILL OBTAIN ANY AND ALL NECESSARY PERMITS INCLUDING, BUT NOT LIMITED TO NPDES, AQUATIC RESOURCES ALTERATION PERMIT(S), CORPS OF ENGINEERS SECTION 404 PERMITS, AND TVA SECTION 26A PERMITS TO DISPOSE OF WASTE MATERIALS.

(49) ONLY NEEDED PRODUCTS WILL BE STORED ON-SITE BY THE CONTRACTOR. THE CONTRACTOR WILL STORE ALL MATERIALS UNDER COVER AND IN APPROPRIATE CONTAINERS. PRODUCTS MUST BE STORED IN ORIGINAL CONTAINERS AND LABELED. MATERIAL MIXING WILL BE CONDUCTED IN ACCORDANCE WITH THE MANUFACTURER'S RECOMMENDATIONS. THE CONTRACTOR'S SITE SUPERINTENDENT WILL INSPECT MATERIALS STORAGE AREAS REGULARLY TO ENSURE PROPER USE AND DISPOSAL.

(50) WHEN POSSIBLE, ALL PRODUCTS WILL BE USED COMPLETELY BEFORE PROPERLY DISPOSING OF THE CONTAINER OFF SITE. THE MANUFACTURER'S DIRECTIONS FOR DISPOSAL OF MATERIALS AND CONTAINERS WILL BE FOLLOWED.

(51) WHEEL WASH WATER WILL BE COLLECTED AND ALLOWED TO SETTLE OUT SUSPENDED SOLIDS PRIOR TO DISCHARGE. WHEEL WASH WATER WILL NOT BE DISCHARGED DIRECTLY INTO ANY STORMWATER SYSTEM OR STORMWATER TREATMENT SYSTEM.

(52) ALL ON-SITE VEHICLES WILL BE MONITORED FOR LEAKS AND RECEIVE REGULAR PREVENTIVE MAINTENANCE TO REDUCE THE CHANCE OF LEAKAGE.

(53) ALL PAINT CONTAINERS WILL BE TIGHTLY SEALED AND STORED WHEN NOT REQUIRED FOR USE. EXCESS PAINT WILL BE DISPOSED OF ACCORDING TO THE MANUFACTURER'S INSTRUCTIONS AND APPLICABLE STATE AND LOCAL REGULATIONS.

(54) CONTRACTORS WILL PROVIDE DESIGNATED TRUCK WASHOUT AREAS ON THE SITE. THESE AREAS MUST BE SELF CONTAINED AND NOT CONNECTED TO ANY STORMWATER OUTLET OF THE SITE. UPON COMPLETION OF CONSTRUCTION WASHOUT AREAS WILL BE PROPERLY STABILIZED. WASH DOWN OR WASTE DISCHARGE OF CONCRETE TRUCKS WILL NOT BE PERMITTED ON-SITE UNLESS PROPER SETTLEMENT AREAS HAVE BEEN PROVIDED IN ACCORDANCE WITH BOTH STATE AND FEDERAL REGULATIONS.

(55) FOR ALL HAZARDOUS MATERIALS STORED ON SITE, THE MANUFACTURER'S RECOMMENDED METHODS FOR SPILL CLEAN UP WILL BE CLEARLY POSTED. SITE PERSONNEL WILL BE MADE AWARE OF THE PROCEDURES AND THE LOCATIONS OF THE INFORMATION AND CLEANUP SUPPLIES.

(56) APPROPRIATE CLEANUP MATERIALS AND EQUIPMENT WILL BE MAINTAINED BY THE CONTRACTOR IN THE MATERIALS STORAGE AREA ON-SITE AND UNDER COVER. SPILL RESPONSE EQUIPMENT WILL BE INSPECTED AND MAINTAINED BY THE CONTRACTOR AS NECESSARY TO REPLACE ANY MATERIALS USED IN SPILL RESPONSE ACTIVITIES.

(57) ALL SPILLS WILL BE CLEANED IMMEDIATELY AFTER DISCOVERY AND THE MATERIALS DISPOSED OF PROPERLY. THE SPILL AREA WILL BE KEPT WELL VENTILATED AND PERSONNEL WILL WEAR APPROPRIATE PROTECTIVE CLOTHING TO PREVENT INJURY FROM CONTACT WITH A HAZARDOUS SUBSTANCE.

(58) THE CONTRACTOR'S SITE SUPERINTENDENT WILL BE THE SPILL PREVENTION AND CLEANUP COORDINATOR. THE CONTRACTOR IS RESPONSIBLE FOR ENSURING THAT THE SITE SUPERINTENDENT HAS HAD APPROPRIATE TRAINING FOR HAZARDOUS MATERIALS HANDLING, SPILL MANAGEMENT, AND CLEANUP

(59) IF OIL SHEEN IS OBSERVED ON SURFACE WATER (E.G. SETTLING PONDS, DETENTION PONDS, SWALES), ACTION WILL BE TAKEN IMMEDIATELY TO REMOVE THE MATERIAL CAUSING THE SHEEN. THE CONTRACTOR WILL USE APPROPRIATE MATERIALS TO CONTAIN AND ABSORB THE SPILL. THE SOURCE OF THE OIL SHEEN WILL ALSO BE IDENTIFIED AND REMOVED OR REPAIRED AS NECESSARY TO PREVENT FURTHER RELEASES.

(60) WHERE A RELEASE CONTAINING A HAZARDOUS SUBSTANCE IN AN AMOUNT EQUAL TO OR IN EXCESS OF A REPORTABLE QUANTITY ESTABLISHED UNDER EITHER 40 CFR 117 OR 40 CFR 302 OCCURS DURING A 24 HOUR PERIOD, SEE THE LATEST TENNESSEE GENERAL PERMIT NO. TNR100000 STORMWATER DISCHARGES FROM CONSTRUCTION ACTIVITIES SECTION 5.1 FOR REPORTING REQUIREMENTS.

UNOFFICIAL SET

NOT FOR BIDDING

STATE OF TENNESSEE
DEPARTMENT OF TRANSPORTATION

ROADWAY GENERAL NOTES

9/21/2016 12:57:33 PM
c:\volkert_pw_workingdir\krystie.bratton\dms17068\2C-Carters Creek & Mayhorn Branch_GeneralNotes.dgn

TYPE	YEAR	PROJECT NO.	SHEET NO.
CONST.	2016	60015-4204-04	2D

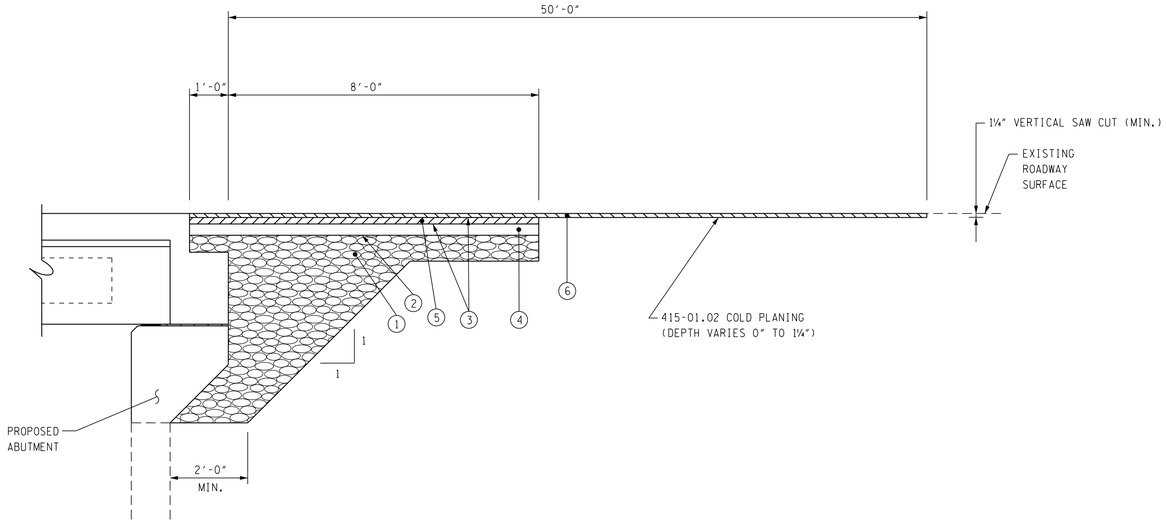

PAVEMENT AT BRIDGE END AND PAVEMENT TRANSITION DETAIL

(TYP. U.O.N.)
(N.T.S.)

PAVING SCHEDULE
(1) 303-01 MINERAL AGGREGATE, TYPE A BASE GRADING D AT 8"
(2) 402-01 PRIME COAT (RATE 0.35 GAL/S.Y.)
(3) 403-01 TACK COAT (RATE 0.07 GAL/S.Y. - GENERAL USE) OR (RATE 0.10 GAL/S.Y. - COLD PLANED)
(4) 307-01.01 BASE MIX GRADING "A" AT 3½"
(5) 307-01.08 BINDER GRADING "B-M2" AT 2"
(6) 411-01.10 SURFACE MIX GRADING "D" AT 1¼"

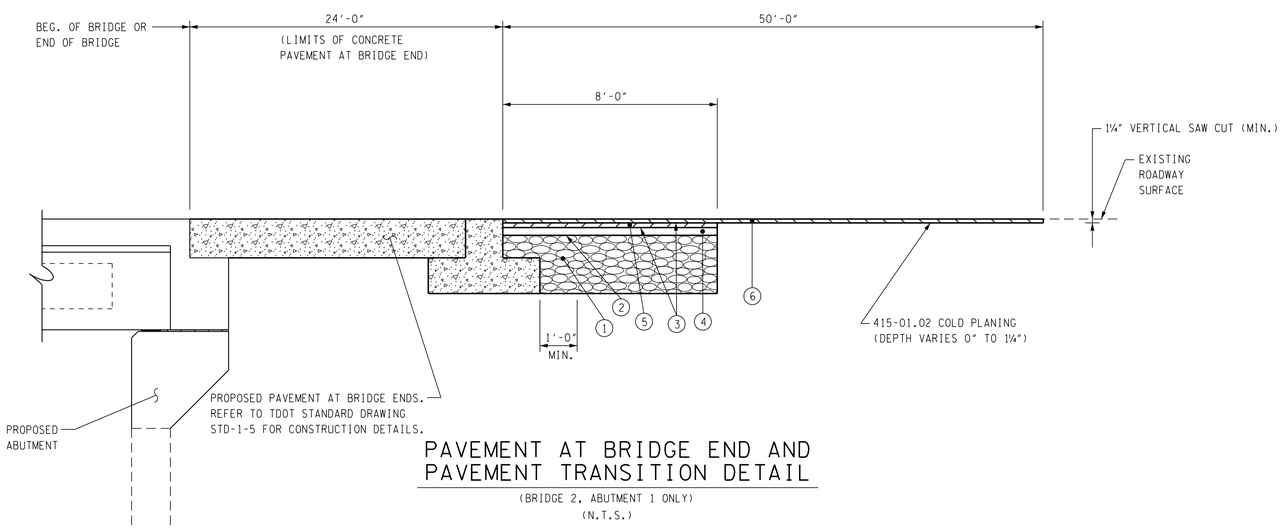

PAVEMENT AT BRIDGE END AND PAVEMENT TRANSITION DETAIL

(BRIDGE 2, ABUTMENT 1 ONLY)
(N.T.S.)

UNOFFICIAL SET

NOT FOR BIDDING

STATE OF TENNESSEE
DEPARTMENT OF TRANSPORTATION

ROADWAY DETAILS

9/21/2016 12:37:25 AM
c:\volkert_pw_workingdir\krystle.bratton\dms17068\2D-Carters Creek & Mayhorn Branch_Details.dgn

TYPE	YEAR	PROJECT NO.	SHEET NO.
CONST.	2016	60015-4204-04	3

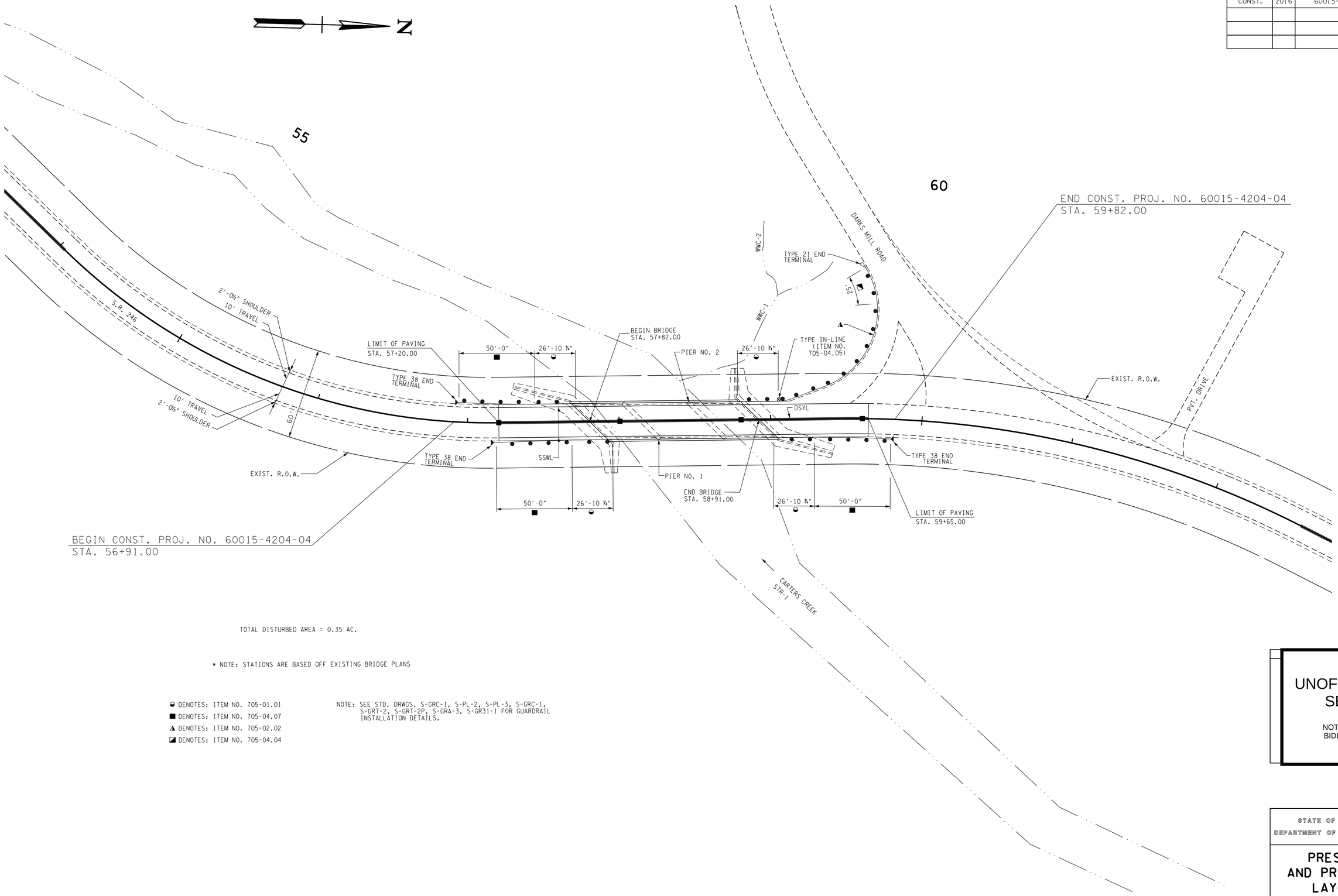

TOTAL DISTURBED AREA = 0.35 AC.

* NOTE: STATIONS ARE BASED OFF EXISTING BRIDGE PLANS

◒ DENOTES: ITEM NO. 705-01.01
■ DENOTES: ITEM NO. 705-04.07
◮ DENOTES: ITEM NO. 705-02.02
◪ DENOTES: ITEM NO. 705-04.04

NOTE: SEE STD. DRWGS. S-GRC-1, S-PL-2, S-PL-3, S-GRC-1, S-GRT-2, S-GRT-2P, S-GRA-3, S-GR31-1 FOR GUARDRAIL INSTALLATION DETAILS.

UNOFFICIAL SET

NOT FOR BIDDING

STATE OF TENNESSEE
DEPARTMENT OF TRANSPORTATION

PRESENT AND PROPOSED LAYOUT

S.R. 246 OVER CARTERS CREEK

SCALE: 1"=30'

9/21/2016 1:45:47 AM
c:\volkert_pw_workingdir\krystle.bratton\dms17068\3-Carters Creek_Present and Proposed.dgn

TYPE	YEAR	PROJECT NO.	SHEET NO.
CONST.	2016	60015-4204-04	3A

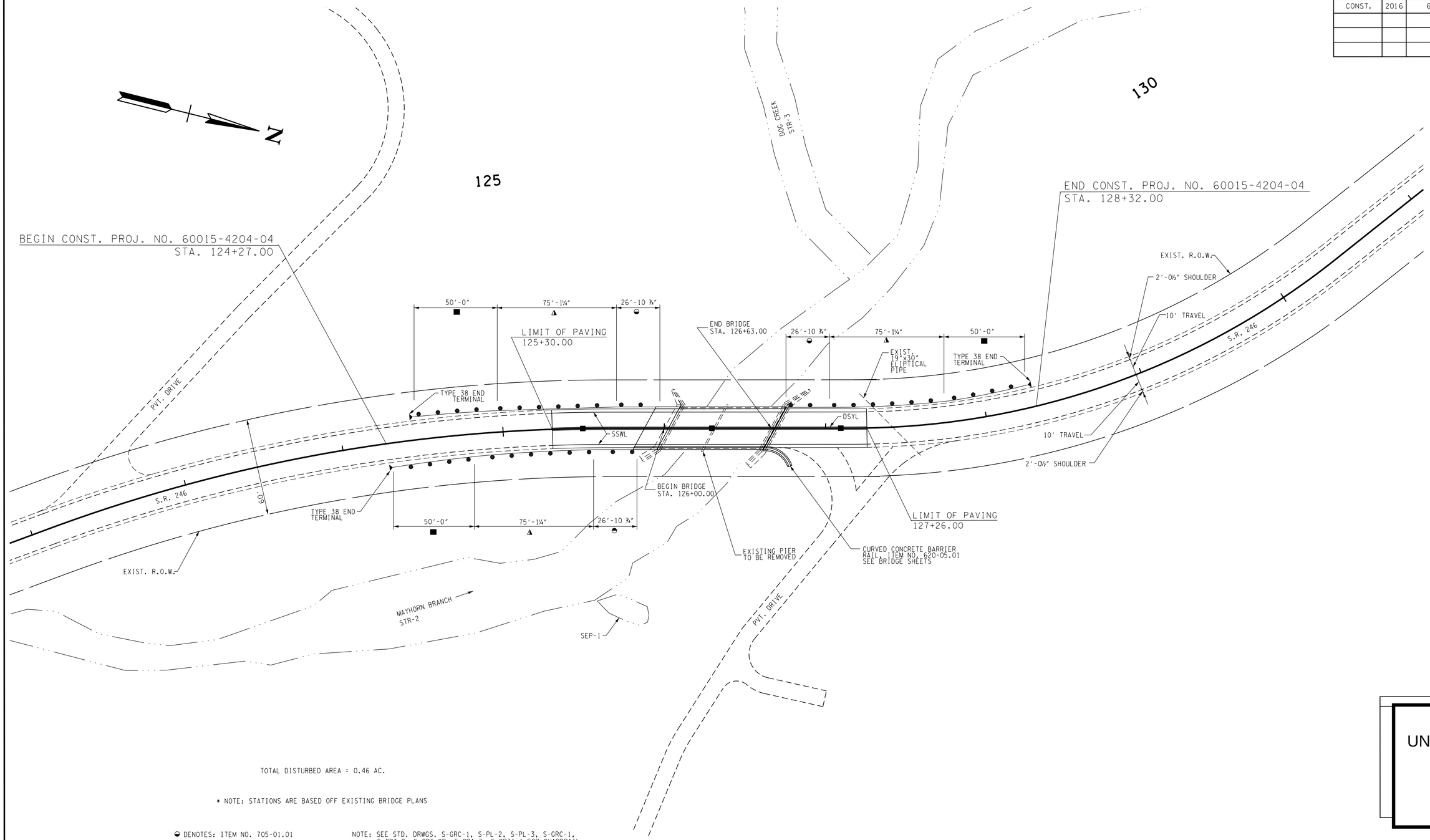

TOTAL DISTURBED AREA = 0.46 AC.

* NOTE: STATIONS ARE BASED OFF EXISTING BRIDGE PLANS

◒ DENOTES: ITEM NO. 705-01.01
■ DENOTES: ITEM NO. 705-04.07
◮ DENOTES: ITEM NO. 705-02.02

NOTE: SEE STD. DRWGS. S-GRC-1, S-PL-2, S-PL-3, S-GRC-1, S-GRT-2, S-GRT-2P, S-GRA-3, S-GR31-1 FOR GUARDRAIL INSTALLATION DETAILS.

SEALED BY

UNOFFICIAL SET

NOT FOR BIDDING

STATE OF TENNESSEE
DEPARTMENT OF TRANSPORTATION

PRESENT AND PROPOSED LAYOUT

S.R. 246 OVER MAYHORN BRANCH

SCALE: 1"=30'

9/21/2016 2:49:33 AM
c:\volkert_pw_workingdir\krystle.bratton\dms17068\3A-Mayhorn Branch_Present and Proposed.dgn

TYPE	YEAR	PROJECT NO.	SHEET NO.
CONST.	2016	60015-4204-04	4

CONSTRUCTION WORK ZONE & TRAFFIC CONTROL

(1) ADVANCED WARNING SIGNS SHALL NOT BE DISPLAYED MORE THAN FORTY-EIGHT (48) HOURS BEFORE PHYSICAL CONSTRUCTION BEGINS. SIGNS MAY BE ERECTED UP TO ONE WEEK BEFORE NEEDED, IF THE SIGN FACE IS FULLY COVERED.

(2) IF THE CONTRACTOR MOVES OFF THE PROJECT, HE SHALL COVER OR REMOVE ALL UNNEEDED SIGNS AS DIRECTED BY THE ENGINEER. COSTS OF REMOVAL, COVERING, AND REINSTALLING SIGNS SHALL NOT BE MEASURED AND PAID FOR SEPARATELY, BUT ALL COSTS SHALL BE INCLUDED IN THE ORIGINAL UNIT PRICE BID FOR ITEM NO 712-06, SIGNS (CONSTRUCTION) PER SQUARE FOOT.

(3) A LONG TERM BUT SPORADIC USE WARNING SIGN, SUCH AS A FLAGGER SIGN, MAY REMAIN IN PLACE WHEN NOT REQUIRED PROVIDED THE SIGN FACE IS FULLY COVERED.

(4) TRAFFIC CONTROL DEVICES SHALL NOT BE DISPLAYED OR ERECTED UNLESS RELATED CONDITIONS ARE PRESENT NECESSITATING WARNING.

(5) USE OF BARRICADES, PORTABLE BARRIER RAILS, VERTICAL PANELS, AND DRUMS SHALL BE LIMITED TO THE IMMEDIATE AREAS OF CONSTRUCTION WHERE A HAZARD IS PRESENT. THESE DEVICES SHALL NOT BE STORED ALONG THE ROADWAY WITHIN THIRTY (30) FEET OF THE EDGE OF THE TRAVELED WAY BEFORE OR AFTER USE UNLESS PROTECTED BY GUARDRAIL, BRIDGE RAIL, AND/OR BARRIERS INSTALLED FOR OTHER PURPOSES FOR ROADWAYS WITH CURRENT ADT'S LESS THAN 1500 AND DESIGN SPEED OF LESS THAN 60 MPH. THIS DISTANCE SHALL INCREASE TO FORTY-FIVE (45) FEET FOR ROADWAYS WITH CURRENT ADT'S OF 1500 OR GREATER AND DESIGN SPEED OF 60 MPH OR GREATER OR ON THE OUTSIDE OF A HORIZONTAL CURVE. THESE DEVICES SHALL BE REMOVED FROM THE CONSTRUCTION WORK ZONE WHEN THE ENGINEER DETERMINES THEY ARE NO LONGER NEEDED. WHERE THERE IS INSUFFICIENT RIGHT-OF-WAY TO PROVIDE FOR THIS REQUIRED SETBACK, THE CONTRACTOR SHALL DETERMINE THE ALTERNATE LOCATIONS AND REQUEST THE ENGINEER'S APPROVAL TO USE THEM.

(6) THE CONTRACTOR SHALL NOT BE PERMITTED TO PARK ANY VEHICLES OR CONSTRUCTION EQUIPMENT DURING PERIODS OF INACTIVITY, WITHIN THIRTY (30) FEET OF THE EDGE OF PAVEMENT WHEN THE LANE IS OPEN TO TRAFFIC UNLESS PROTECTED BY GUARDRAIL, BRIDGE RAIL, AND/OR BARRIERS INSTALLED FOR OTHER PURPOSES FOR ROADWAYS WITH CURRENT ADT'S LESS THAN 1500 AND DESIGN SPEED OF LESS THAN 60 MPH. THIS DISTANCE SHALL BE INCREASED TO FORTY-FIVE (45) FEET FOR ROADWAYS WITH CURRENT ADT'S OF 1500 OR GREATER AND DESIGN SPEED OF 60 MPH OR GREATER OR ON THE OUTSIDE OF A HORIZONTAL CURVE. PRIVATELY OWNED VEHICLES SHALL NOT BE ALLOWED TO PARK WITHIN THIRTY (30) FEET OF AN OPEN TRAFFIC LANE AT ANY TIME UNLESS PROTECTED AS DESCRIBED ABOVE FOR ROADWAYS WITH CURRENT ADT'S LESS THAN 1500 AND DESIGN SPEED OF LESS THAN 60 MPH. THIS DISTANCE SHALL BE INCREASED TO FORTY-FIVE (45) FEET FOR ROADWAYS WITH CURRENT ADT'S OF 1500 OR GREATER AND DESIGN SPEED OF 60 MPH OR GREATER OR ON THE OUTSIDE OF A HORIZONTAL CURVE.. WHERE THERE IS INSUFFICIENT RIGHT-OF-WAY TO PROVIDE FOR THIS REQUIRED SETBACK, THE CONTRACTOR SHALL DETERMINE THE ALTERNATE LOCATIONS AND REQUEST THE ENGINEER'S APPROVAL TO USE THEM.

(7) ALL DETOUR AND CONSTRUCTION SIGNING SHALL BE IN STRICT ACCORDANCE WITH THE MANUAL ON UNIFORM TRAFFIC CONTROL DEVICES.

TRAFFIC CONTROL - SPECIAL NOTES

(1) THE TRAFFIC CONTROL PLAN IS TO SERVE AS A GUIDE ONLY. THIS PLAN DOES NOT RELIEVE THE CONTRACTOR OF THE RESPONSIBILITY OF INSTALLING TRAFFIC CONTROL DEVICES IN ACCORDANCE WITH THE CURRENT EDITION OF THE MANUAL ON UNIFORM TRAFFIC CONTROL DEVICES.

(2) IF ADDITIONAL SIGNS ARE DEEMED NECESSARY BY THE ENGINEER, THEY SHALL BE FURNISHED AND INSTALLED AT THE BID PRICE FOR ITEM NO. 712-06 SIGNS (CONSTRUCTION) S.F.

(3) ALL LOCAL EMERGENCY AGENCIES AND RESIDENCES WITHIN THE IMMEDIATE AREA OF STATE ROUTE 246 OVER CARTERS CREEK AND MAYHORN BRANCH SHALL BE NOTIFIED NOT LESS THAN 48 HOURS IN ADVANCE OF BRIDGE CONSTRUCTION WHICH MAY AFFECT ACCESS TO THESE AREAS.

(4) NO LESS THAN SEVEN (7) DAYS PRIOR TO ESTABLISHING ONE LANE CLOSURE OF STATE ROUTE 246 OVER CARTERS CREEK AND MAYHORN BRANCH, THE CONTRACTOR SHALL NOTIFY THE FOLLOWING INDIVIDUALS OR AGENCIES COMPLETELY DESCRIBING THE AFFECTED ROADS AND THE APPROXIMATE DURATION OF THE CONSTRUCTION: THESE PARTIES INCLUDE BUT ARE NOT LIMITED TO: (1) LOCAL LAW ENFORCEMENT OFFICE, (2) LOCAL FIRE DEPARTMENT, (3) AMBULANCE SERVICE, (4) LOCAL SCHOOL SUPERINTENDENT, (5) UNITED STATES POSTAL SERVICE.

TRAFFIC CONTROL QUANTITIES

ITEM NO.	DESCRIPTION	BRIDGE 1 (CARTERS CREEK)		BRIDGE 2 (MAYHORN BRANCH)	
		UNIT	QUANTITY	UNIT	QUANTITY
705-04.50	BARRIER RAIL DELINEATORS	EACH	9	EACH	9
705-08.51	PORTABLE IMPACT ATTENUATOR NCHRP350 TL-3	EACH	2	EACH	2
712-01	TRAFFIC CONTROL	LUMP SUM	0.5	LUMP SUM	0.5
712-02.02	INTERCONNECTED PORTABLE BARRIER RAIL	L.F.	320	L.F.	310
712-04.01	FLEXIBLE DRUMS	EACH	34	EACH	26
712-05.01	WARNING LIGHTS (TYPE A)	EACH	34	EACH	26
712-06	SIGNS (CONSTRUCTION)	S.F.	366	S.F.	352
712-07.03	TEMPORARY BARRICADE (TYPE III)	L.F.	0	L.F.	24
712-09.01	REMOVABLE PAVEMENT MARKING LINE	L.F.	1420	L.F.	1210
712-09.04	REMOVABLE PAVEMENT MARKING (STOP LINE)	L.F.	42	L.F.	20
730-40	TEMPORARY TRAFFIC SIGNAL SYSTEM	EACH	1	EACH	1

TRAFFIC CONTROL SIGN QUANTITIES

	DESCRIPTION		BRIDGE 1 (CARTERS CREEK)		BRIDGE 2 (MAYHORN BRANCH)	
		SIZE	EACH	SIGNS (CONST.) 712-06, S.F.	EACH	SIGNS (CONST.) 712-06, S.F.
W20-1	ROAD WORK 1/2 MILE	48" X 48"	2	32	2	32
W20-1	ROAD WORK 1500 FEET	48" X 48"	2	32	2	32
W20-1	ROAD WORK 1000 FEET	48" X 48"	2	32	2	32
W20-1	ROAD WORK 500 FEET	48" X 48"	2	32	2	32
W20-1	ROAD WORK AHEAD	48" X 48"	1	16	1	16
W20-4	ONE LANE ROAD 1500 FT	48" X 48"	2	32	2	32
W20-7A	FLAGGER AHEAD (SYMBOL)	36" X 36"	2	18	2	18
W1-4R	REVERSE CURVE (RIGHT)	30" X 30"	1	6.25	1	6.25
W3-3	SIGNAL AHEAD (SYMBOL)	36" X 36"	3	27	2	18
W3-4	BE PREPARED TO STOP	48" X 48"	2	32	2	32
R10-6	STOP HERE ON RED	24" X 36"	2	12	2	12
R10-6 (MOD.)	STAY IN LANE TO EXTEND GREEN	30" X 42"	2	17.5	2	17.5
R10-11A	NO TURN ON RED	24" X 30"	1	5	0	0
G20-2	END ROAD WORK	36" X 18"	2	9	2	9
SPECIAL 1	MAXIMUM X MINUTE RED	42" X 48"	3	42	3	42
SPECIAL 2	MAXIMUM XX MPH SPEED	42" X 36"	2	21	2	21
TOTAL				365.75		351.75

* FOR USE OF THESE SIGNS, SEE TDOT STANDARD DRAWINGS T-WZ-32, T-WZ-34 AND T-WZ-35.

UNOFFICIAL SET

NOT FOR BIDDING

STATE OF TENNESSEE
DEPARTMENT OF TRANSPORTATION

TRAFFIC CONTROL NOTES & QUANTITIES

SCALE: N.T.S.

9/21/2016 4:12:57 AM
c:\volkert_pw_workingdir\krystle.bratton\dms17068\4-Carters Creek & Mayhorn Branch_Traffic Control Sheet 1.dgn

TYPE	YEAR	PROJECT NO.	SHEET NO.
CONST.	2016	60015-4204-04	4A

TRAFFIC CONTROL LEGEND

SYMBOL	ITEM
	WORK ZONE
	FLEXIBLE DRUMS (CHANNELIZING)
	SIGN (CONSTRUCTION)
	SIGN (CONSTRUCTION) (2-POST)
	PORTABLE BARRIER RAIL (WITH BARRIER RAIL DELINEATORS)
	TEMPORARY ATTENUATOR
RSSWL	REMOVABLE SINGLE SOLID WHITE LINE
RSL	REMOVABLE STOP BAR (24")
	SIGNAL HEAD WITH BACKPLATE
	SIGNAL SUPPORT - WOOD POLE

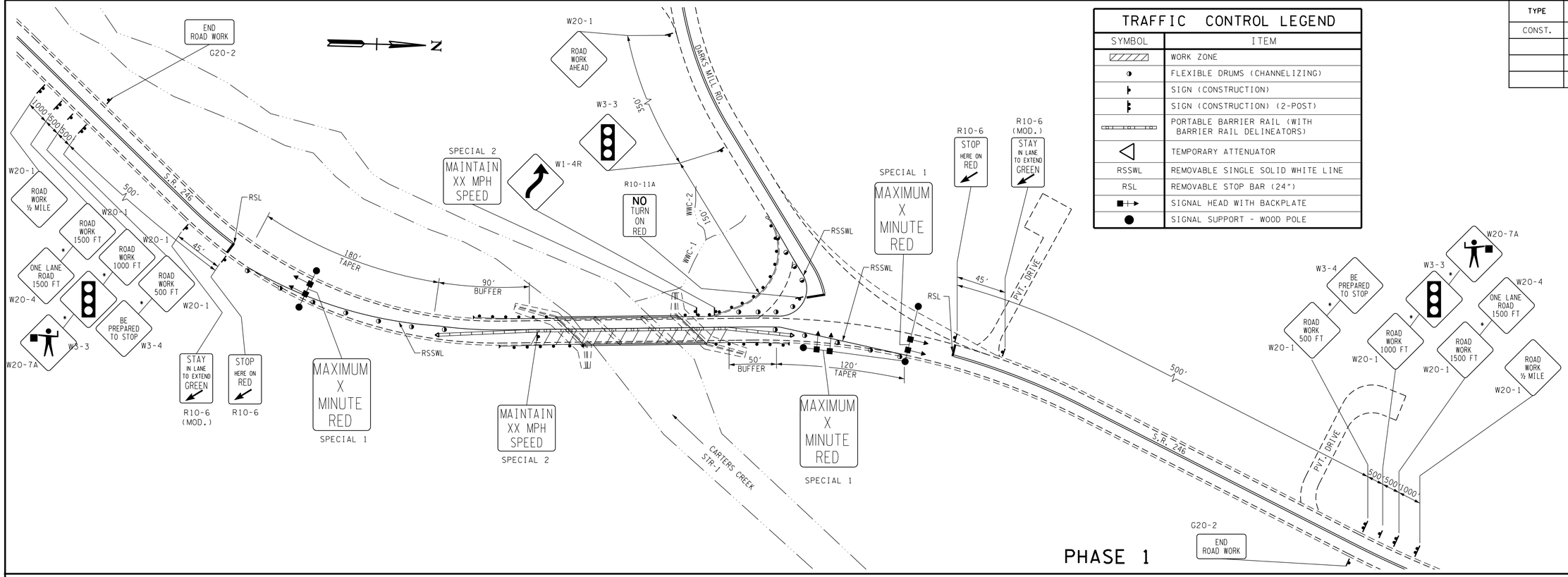

NOTE:

SEE STD. DRAWINGS T-WZ-32, T-WZ-33, T-WZ-34 AND T-WZ-35 FOR ADDITIONAL DETAILS.

* SEE SIGNING AND MARKING NOTE NO. B1 ON STANDARD DRAWING NO. T-WZ-34 FOR INTERCHANGING OF SIGNS.

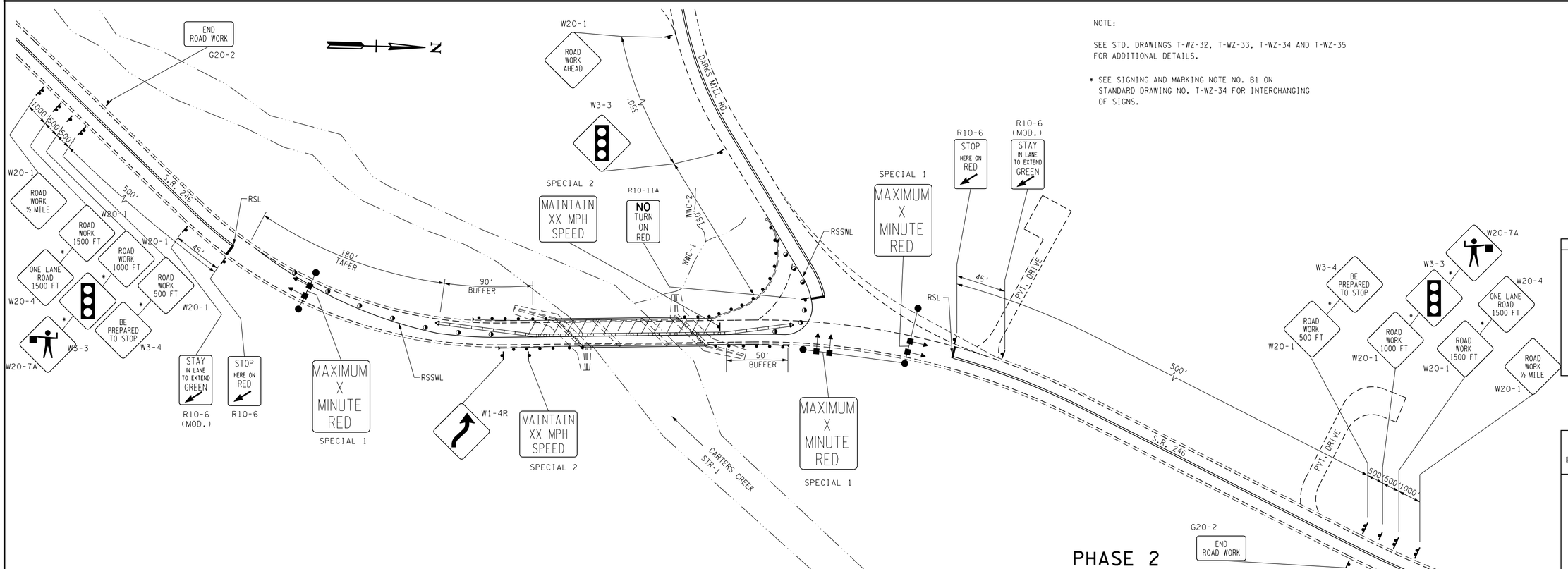

UNOFFICIAL SET

NOT FOR BIDDING

STATE OF TENNESSEE
DEPARTMENT OF TRANSPORTATION

TRAFFIC CONTROL PLAN

S.R. 246 OVER CARTERS CREEK

SCALE: 1"=50'

9/21/2016 3:48:55 AM
c:\volkert_pw_workingdir\krystie.bratton\dms17068\4A-Carters Creek_Traffic Control_Sheet 2.dgn

TYPE	YEAR	PROJECT NO.	SHEET NO.
CONST.	2016	60015-4204-04	4B

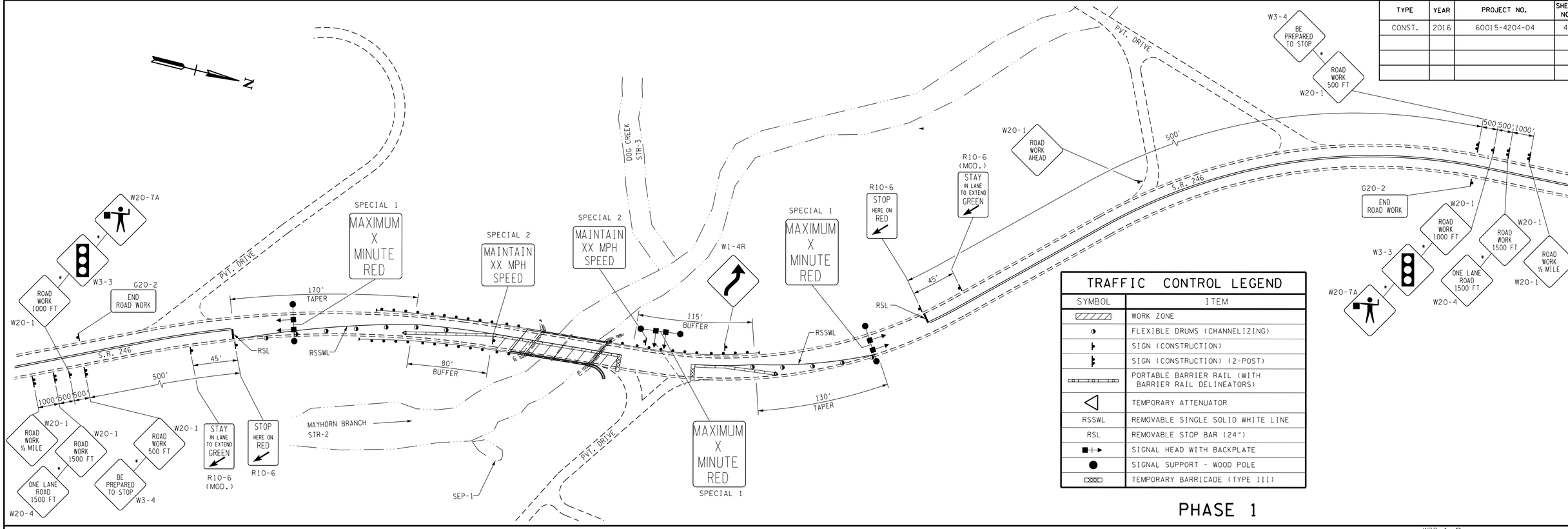

TRAFFIC CONTROL LEGEND

SYMBOL	ITEM
	WORK ZONE
	FLEXIBLE DRUMS (CHANNELIZING)
	SIGN (CONSTRUCTION)
	SIGN (CONSTRUCTION) (2-POST)
	PORTABLE BARRIER RAIL (WITH BARRIER RAIL DELINEATORS)
	TEMPORARY ATTENUATOR
RSSWL	REMOVABLE SINGLE SOLID WHITE LINE
RSL	REMOVABLE STOP BAR (24")
	SIGNAL HEAD WITH BACKPLATE
	SIGNAL SUPPORT - WOOD POLE
	TEMPORARY BARRICADE (TYPE III)

PHASE 1

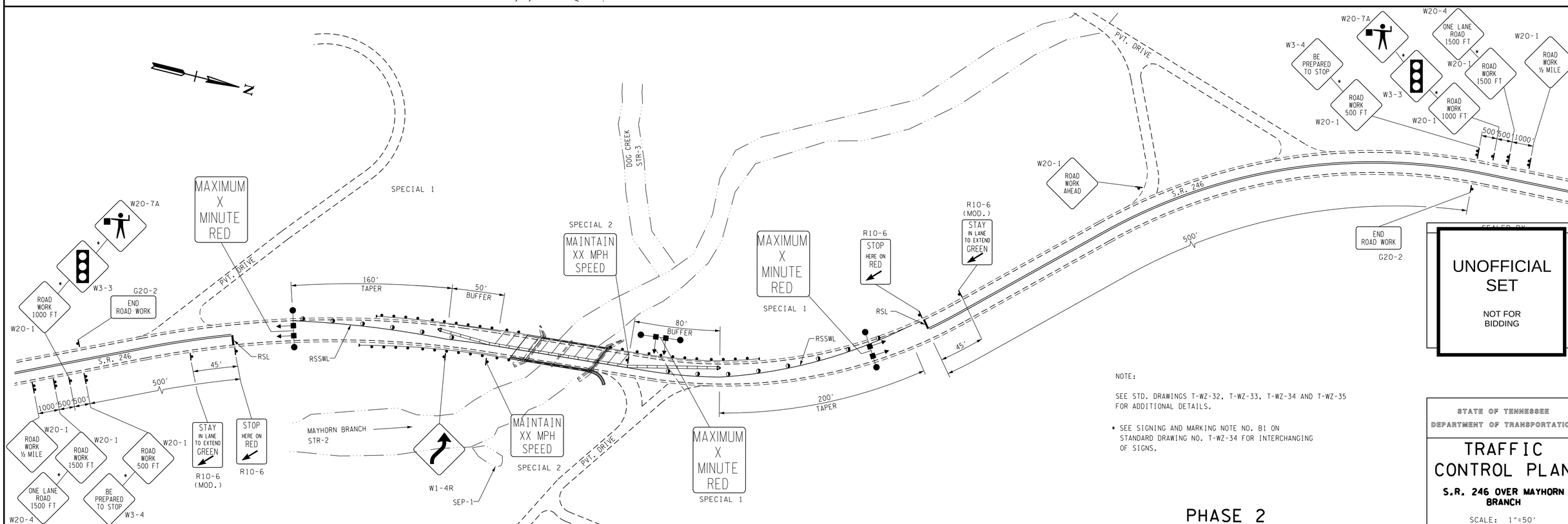

NOTE:

SEE STD. DRAWINGS T-WZ-32, T-WZ-33, T-WZ-34 AND T-WZ-35 FOR ADDITIONAL DETAILS.

* SEE SIGNING AND MARKING NOTE NO. B1 ON STANDARD DRAWING NO. T-WZ-34 FOR INTERCHANGING OF SIGNS.

PHASE 2

UNOFFICIAL SET

NOT FOR BIDDING

STATE OF TENNESSEE
DEPARTMENT OF TRANSPORTATION

TRAFFIC CONTROL PLAN

S.R. 246 OVER MAYHORN BRANCH

SCALE: 1"=50'

9/21/2016 4:08:33 AM
c:\volkert_pw_workingdir\krystle.bratton\dms17068\4B-Mayhorn Branch_Traffic ControlSheet 2.dgn

TYPE	YEAR	PROJECT NO.	SHEET NO.
CONST.	2016	60015-4204-04	5

UTILITY OWNERS

PHONE:
AT&T
116 SOUTH CANON AVENUE
MURFREESBORO, TN 37129
KENNETH LEE KORNEGAY
KK4906@ATT.COM
O: 615-848-2082

FIBER OPTICS:
AT&T FIBER OPTICS
360 GEES MILL BUSINESS PKWY
CONYERS, GA 30013
SCOTT LOGEMAN
SL1213@ATT.COM
O: 770-335-8255

ELECTRIC:
COLUMBIA POWER
201 PICKENS LANE
COLUMBIA, TN 38401
DOUG BURGESS
DOUG.BURGESS@CPWS.COM
O: 931-375-7740

SEWER:
COLUMBIA WASTE WATER PLANT
1244 TREATMENT PLANT RD.
COLUMBIA, TN 38401
RAY GARRETT
RGARRETT@COLUMBIATN.COM
O: 931-560-1001

WATER:
COLUMBIA WATER
201 PICKENS LANE
COLUMBIA, TN 38401
SLOAN DELK
SLOAN.DELK@CPWS.COM
O: 931-375-7646

CABLE:
CHARTER COMMUNICATION
215 INDUSTRIAL BLVD
TULAHOMA, TN 37388
RICHARD RIDDLE
RICHARD.RIDDLE@CHARTER.COM
O: 931-461-4315

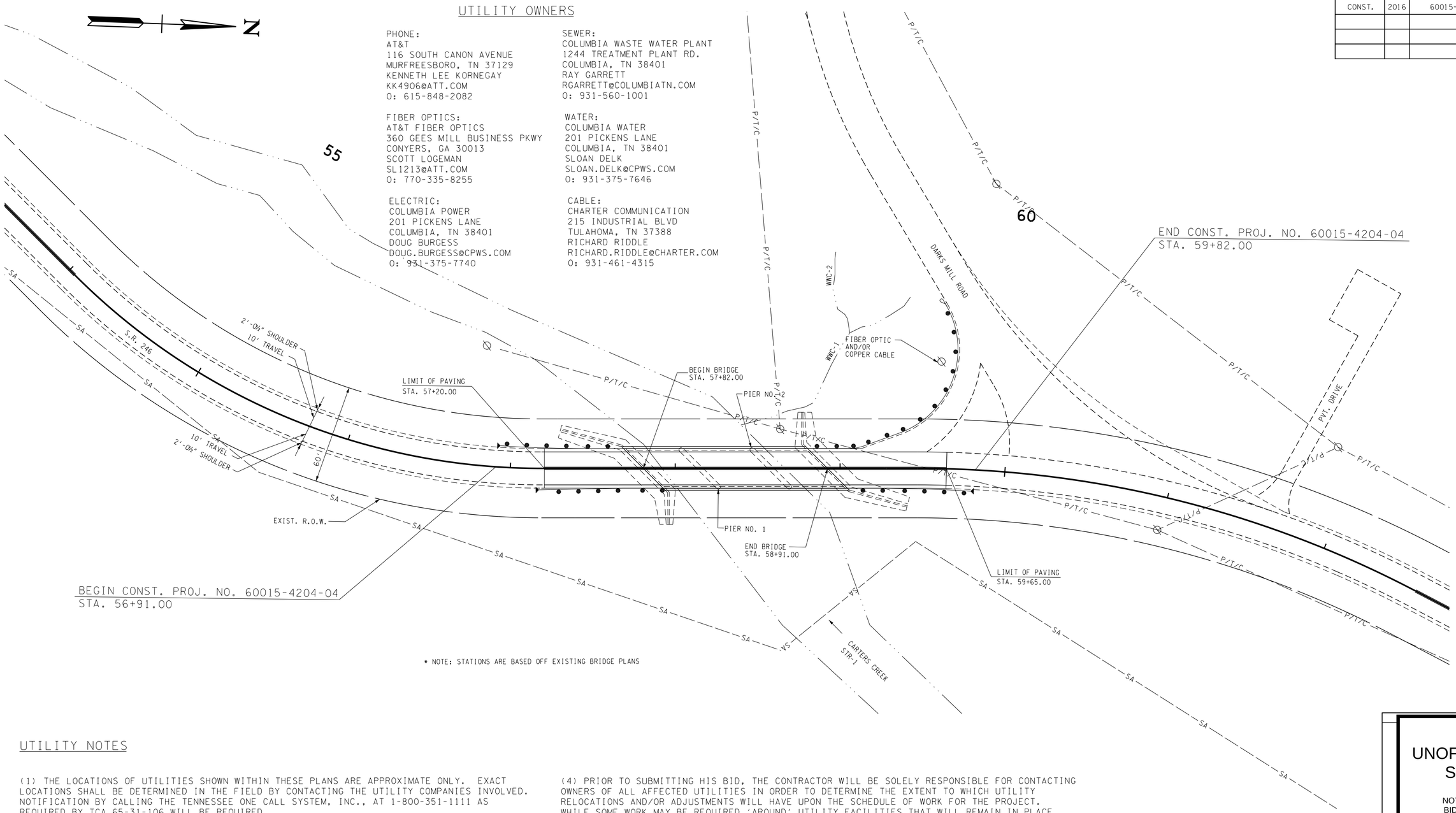

* NOTE: STATIONS ARE BASED OFF EXISTING BRIDGE PLANS

UTILITY NOTES

(1) THE LOCATIONS OF UTILITIES SHOWN WITHIN THESE PLANS ARE APPROXIMATE ONLY. EXACT LOCATIONS SHALL BE DETERMINED IN THE FIELD BY CONTACTING THE UTILITY COMPANIES INVOLVED. NOTIFICATION BY CALLING THE TENNESSEE ONE CALL SYSTEM, INC., AT 1-800-351-1111 AS REQUIRED BY TCA 65-31-106 WILL BE REQUIRED.

(2) UNLESS OTHERWISE NOTED, ALL UTILITY ADJUSTMENTS WILL BE PERFORMED BY THE UTILITY OR IT'S REPRESENTATIVE. THE CONTRACTOR AND UTILITY OWNERS WILL BE REQUIRED TO COOPERATE WITH EACH OTHER IN ORDER TO EXPEDITE THE WORK REQUIRED BY THIS CONTRACT. ON CONTRACTS WHERE CONSTRUCTION STAKES, LINES, AND GRADES ARE CONTRACT ITEMS, THE CONTRACTOR WILL BE REQUIRED TO PROVIDE RIGHT-OF-WAY OR SLOPE STAKES, DITCH OR STREAM BED GRADES, OR OTHER ESSENTIAL SURVEY STAKING TO PREVENT CONFLICTS WITH THE HIGHWAY CONSTRUCTION. FREQUENTLY, THIS WILL BE REQUIRED AS THE FIRST ITEM OF WORK AND AT ANY LOCATION ON THE PROJECT DIRECTED BY THE ENGINEER.

(3) THE CONTRACTOR WILL PROVIDE ALL NECESSARY PROTECTIVE MEASURES TO SAFEGUARD EXISTING UTILITIES FROM DAMAGE DURING CONSTRUCTION OF THIS PROJECT. IN THE EVENT THAT SPECIAL EQUIPMENT IS REQUIRED TO WORK OVER AND AROUND THE UTILITIES, THE CONTRACTOR WILL BE REQUIRED TO FURNISH SUCH EQUIPMENT. THE COST OF PROTECTING UTILITIES FROM DAMAGE AND FURNISHING SPECIAL EQUIPMENT WILL BE INCLUDED IN THE PRICE BID FOR OTHER ITEMS OF CONSTRUCTION.

(4) PRIOR TO SUBMITTING HIS BID, THE CONTRACTOR WILL BE SOLELY RESPONSIBLE FOR CONTACTING OWNERS OF ALL AFFECTED UTILITIES IN ORDER TO DETERMINE THE EXTENT TO WHICH UTILITY RELOCATIONS AND/OR ADJUSTMENTS WILL HAVE UPON THE SCHEDULE OF WORK FOR THE PROJECT. WHILE SOME WORK MAY BE REQUIRED 'AROUND' UTILITY FACILITIES THAT WILL REMAIN IN PLACE, OTHER UTILITY FACILITIES MAY NEED TO BE ADJUSTED CONCURRENTLY WITH THE CONTRACTOR'S OPERATIONS. ADVANCE CLEAR CUTTING MAY BE REQUIRED BY THE ENGINEER AT ANY LOCATION WHERE CLEARING IS CALLED FOR IN THE SPECIFICATIONS AND CLEAR CUTTING IS NECESSARY FOR A UTILITY RELOCATION. ANY ADDITIONAL COST WILL BE INCLUDED IN THE UNIT PRICE BID FOR THE CLEARING ITEM SPECIFIED IN THE PLANS.

(5) THE CONTRACTOR SHALL NOTIFY EACH INDIVIDUAL UTILITY OWNER OF HIS PLAN OF OPERATION IN THE AREA OF THE UTILITIES. PRIOR TO COMMENCING WORK, THE CONTRACTOR SHALL CONTACT THE UTILITY OWNERS AND REQUEST THEM TO PROPERLY LOCATE THEIR RESPECTIVE UTILITY ON THE GROUND. THIS NOTIFICATION SHALL BE GIVEN AT LEAST THREE (3) BUSINESS DAYS PRIOR TO COMMENCEMENT OF OPERATIONS AROUND THE UTILITY IN ACCORDANCE WITH TCA 65-31-106.

UNOFFICIAL SET

NOT FOR BIDDING

STATE OF TENNESSEE
DEPARTMENT OF TRANSPORTATION

EXISTING UTILITIES

S.R. 246 OVER CARTERS CREEK

SCALE: 1"=30'

9/21/2016 4:20:24 AM
c:\volkert_pw_workingdir\krystle.bratton\dms17068\5-Carters Creek_Existing Utilities.dgn

TYPE	YEAR	PROJECT NO.	SHEET NO.
CONST.	2016	60015-4204-04	5A

UTILITY OWNERS

WATER:
COLUMBIA WATER
201 PICKENS LANE
COLUMBIA, TN 38401
SLOAN DELK
SLOAN.DELK@CPWS.COM
O: 931-375-7646

ELECTRIC:
COLUMBIA POWER
201 PICKENS LANE
COLUMBIA, TN 38401
DOUG BURGESS
DOUG.BURGESS@CPWS.COM
O: 931-375-7740

CABLE:
CHARTER COMMUNICATIONS
215 INDUSTRIAL BLVD.
TULLAHOMA, TN 37388
RICHARD RIDDLE
RICHARD.RIDDLE@CHARTER.COM
O: 931-461-4315

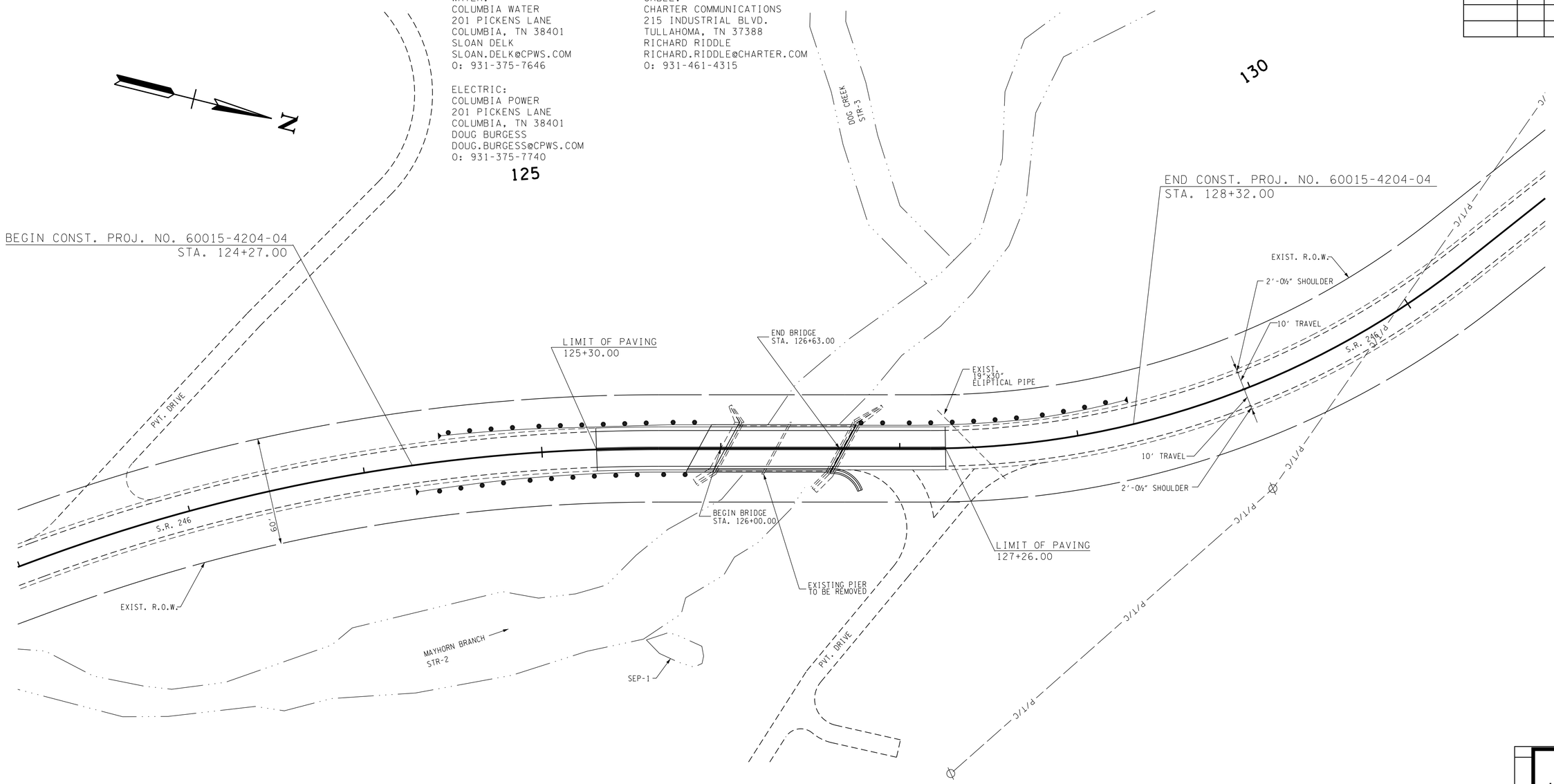

(1) THE LOCATIONS OF UTILITIES SHOWN WITHIN THESE PLANS ARE APPROXIMATE ONLY. EXACT LOCATIONS SHALL BE DETERMINED IN THE FIELD BY CONTACTING THE UTILITY COMPANIES INVOLVED. NOTIFICATION BY CALLING THE TENNESSEE ONE CALL SYSTEM, INC., AT 1-800-351-1111 AS REQUIRED BY TCA 65-31-106 WILL BE REQUIRED.

(2) UNLESS OTHERWISE NOTED, ALL UTILITY ADJUSTMENTS WILL BE PERFORMED BY THE UTILITY OR IT'S REPRESENTATIVE. THE CONTRACTOR AND UTILITY OWNERS WILL BE REQUIRED TO COOPERATE WITH EACH OTHER IN ORDER TO EXPEDITE THE WORK REQUIRED BY THIS CONTRACT. ON CONTRACTS WHERE CONSTRUCTION STAKES, LINES, AND GRADES ARE CONTRACT ITEMS, THE CONTRACTOR WILL BE REQUIRED TO PROVIDE RIGHT-OF-WAY OR SLOPE STAKES, DITCH OR STREAM BED GRADES, OR OTHER ESSENTIAL SURVEY STAKING TO PREVENT CONFLICTS WITH THE HIGHWAY CONSTRUCTION. FREQUENTLY, THIS WILL BE REQUIRED AS THE FIRST ITEM OF WORK AND AT ANY LOCATION ON THE PROJECT DIRECTED BY THE ENGINEER.

(3) THE CONTRACTOR WILL PROVIDE ALL NECESSARY PROTECTIVE MEASURES TO SAFEGUARD EXISTING UTILITIES FROM DAMAGE DURING CONSTRUCTION OF THIS PROJECT. IN THE EVENT THAT SPECIAL EQUIPMENT IS REQUIRED TO WORK OVER AND AROUND THE UTILITIES, THE CONTRACTOR WILL BE REQUIRED TO FURNISH SUCH EQUIPMENT. THE COST OF PROTECTING UTILITIES FROM DAMAGE AND FURNISHING SPECIAL EQUIPMENT WILL BE INCLUDED IN THE PRICE BID FOR OTHER ITEMS OF CONSTRUCTION.

(4) PRIOR TO SUBMITTING HIS BID, THE CONTRACTOR WILL BE SOLELY RESPONSIBLE FOR CONTACTING OWNERS OF ALL AFFECTED UTILITIES IN ORDER TO DETERMINE THE EXTENT TO WHICH UTILITY RELOCATIONS AND/OR ADJUSTMENTS WILL HAVE UPON THE SCHEDULE OF WORK FOR THE PROJECT. WHILE SOME WORK MAY BE REQUIRED 'AROUND' UTILITY FACILITIES THAT WILL REMAIN IN PLACE, OTHER UTILITY FACILITIES MAY NEED TO BE ADJUSTED CONCURRENTLY WITH THE CONTRACTOR'S OPERATIONS. ADVANCE CLEAR CUTTING MAY BE REQUIRED BY THE ENGINEER AT ANY LOCATION WHERE CLEARING IS CALLED FOR IN THE SPECIFICATIONS AND CLEAR CUTTING IS NECESSARY FOR A UTILITY RELOCATION. ANY ADDITIONAL COST WILL BE INCLUDED IN THE UNIT PRICE BID FOR THE CLEARING ITEM SPECIFIED IN THE PLANS.

(5) THE CONTRACTOR SHALL NOTIFY EACH INDIVIDUAL UTILITY OWNER OF HIS PLAN OF OPERATION IN THE AREA OF THE UTILITIES. PRIOR TO COMMENCING WORK, THE CONTRACTOR SHALL CONTACT THE UTILITY OWNERS AND REQUEST THEM TO PROPERLY LOCATE THEIR RESPECTIVE UTILITY ON THE GROUND. THIS NOTIFICATION SHALL BE GIVEN AT LEAST THREE (3) BUSINESS DAYS PRIOR TO COMMENCEMENT OF OPERATIONS AROUND THE UTILITY IN ACCORDANCE WITH TCA 65-31-106.

UNOFFICIAL SET

NOT FOR BIDDING

STATE OF TENNESSEE
DEPARTMENT OF TRANSPORTATION

EXISTING UTILITIES

S.R. 246 OVER MAYHORN BRANCH

SCALE: 1"=30'

9/21/2016 4:36:36 AM
c:\volkert_pw.workingdir\krystle.bratton\dms17068\5A-Mayhorn Branch_Existing Utilities.dgn

TYPE	YEAR	PROJECT NO.	SHEET NO.
CONST.	2016	60015-4204-04	6

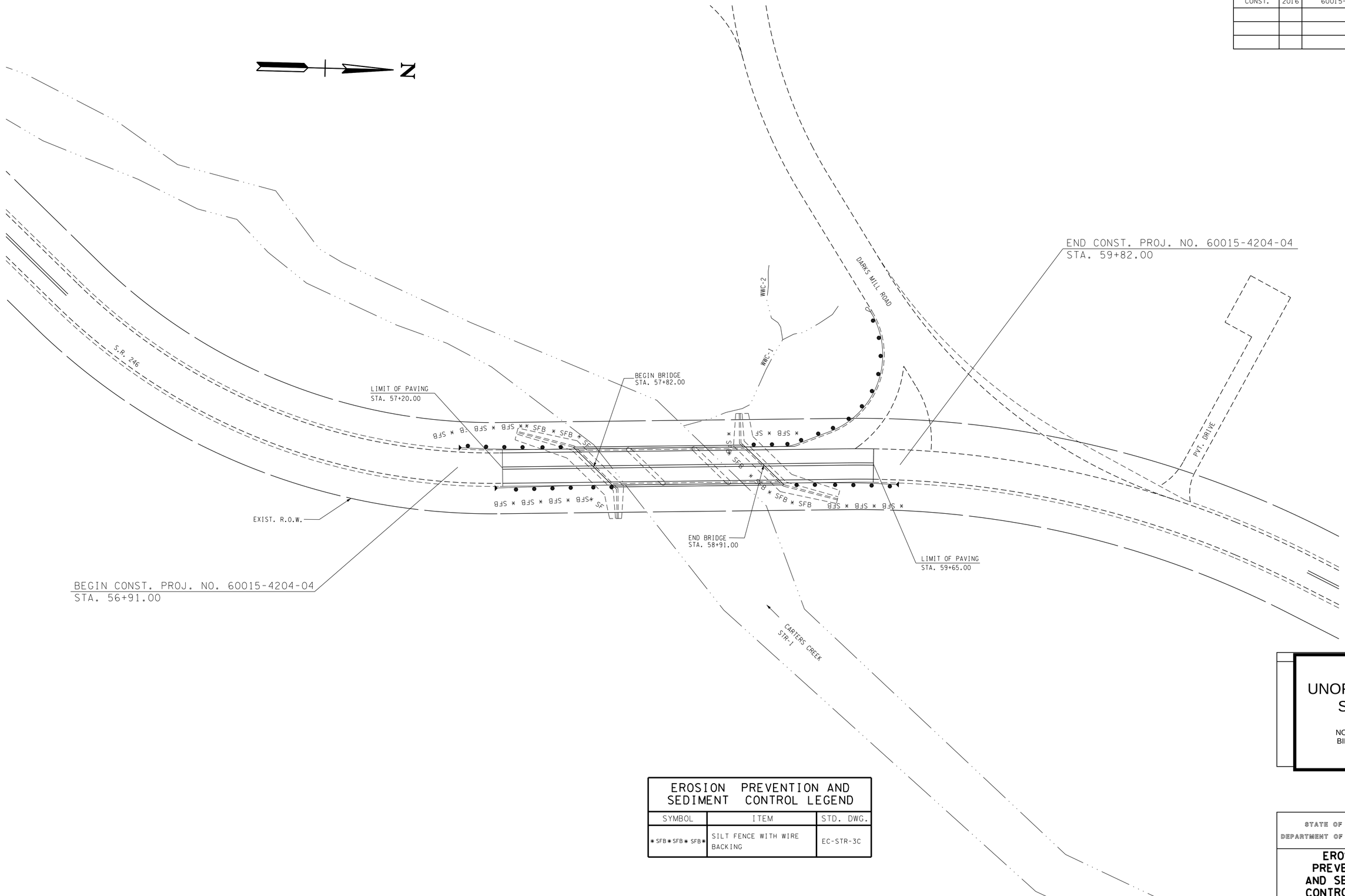

EROSION PREVENTION AND SEDIMENT CONTROL LEGEND		
SYMBOL	ITEM	STD. DWG.
* SFB * SFB * SFB *	SILT FENCE WITH WIRE BACKING	EC-STR-3C

UNOFFICIAL SET

NOT FOR BIDDING

STATE OF TENNESSEE
DEPARTMENT OF TRANSPORTATION

EROSION PREVENTION AND SEDIMENT CONTROL PLAN

S.R. 246 OVER CARTERS CREEK

SCALE: 1"=30'

9/21/2016 4:30:51 AM
c:\volkert_pw_workingdir\krystle.bratton\dms17068\6-Carters Creek_Erosion Control.dgn

TYPE	YEAR	PROJECT NO.	SHEET NO.
CONST.	2016	60015-4204-04	6A

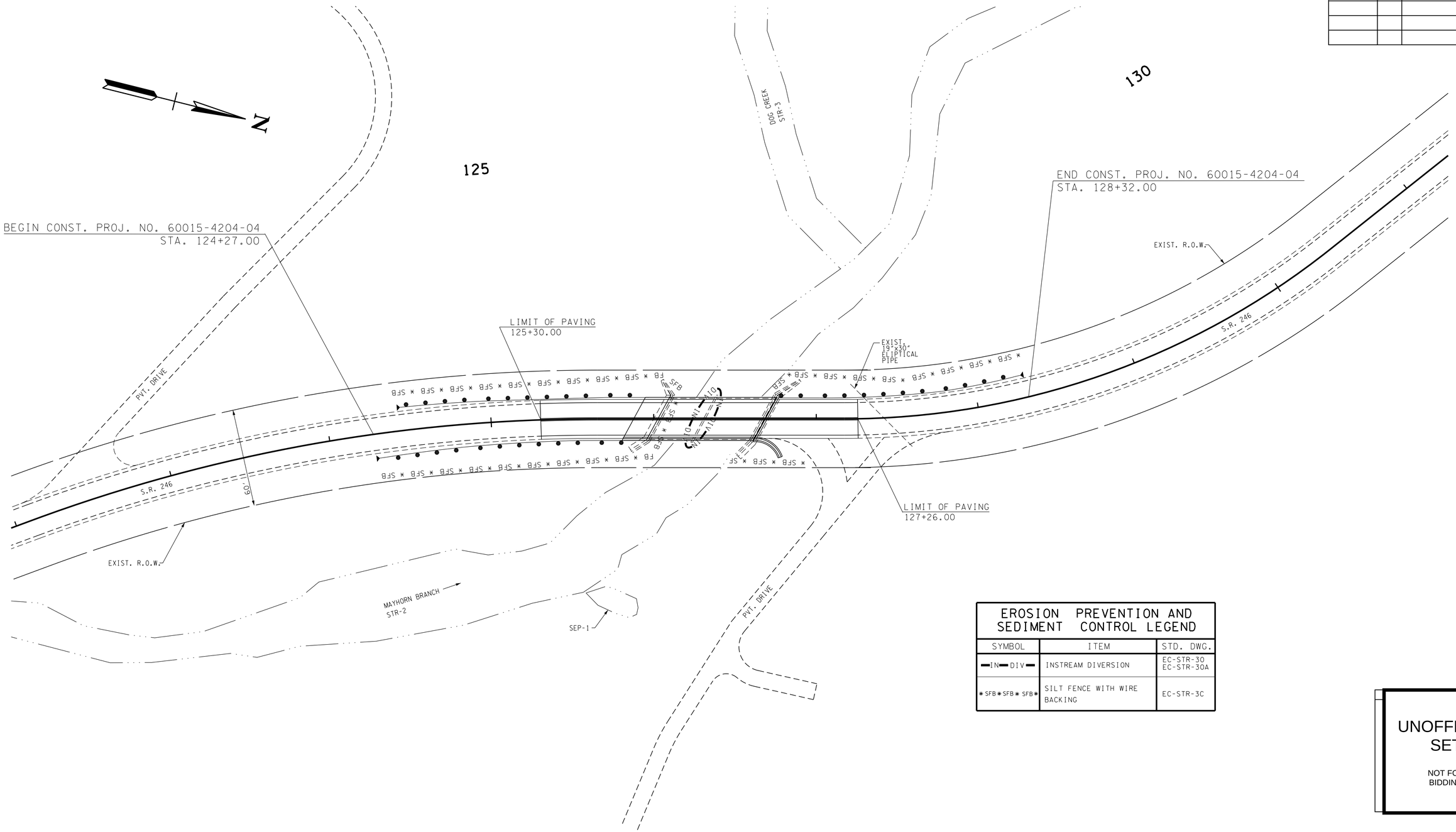

EROSION PREVENTION AND SEDIMENT CONTROL LEGEND		
SYMBOL	ITEM	STD. DWG.
—IN— DIV—	INSTREAM DIVERSION	EC-STR-30 EC-STR-30A
* SFB * SFB * SFB *	SILT FENCE WITH WIRE BACKING	EC-STR-3C

UNOFFICIAL SET

NOT FOR BIDDING

STATE OF TENNESSEE
DEPARTMENT OF TRANSPORTATION

EROSION PREVENTION AND SEDIMENT CONTROL PLAN

S.R. 246 OVER MAYHORN BRANCH

SCALE: 1"=30'

9/21/2016 4:38:53 AM
c:\volkert_pw.workingdir\krystle.bratton\dms17068\6A-Mayhorn Branch_Erosion Control.dgn

PROJECT NO.	YEAR	SHEET NO.
60015-4204-04	2016	____

REVISIONS

NO.	DATE	BY	BRIEF DESCRIPTION

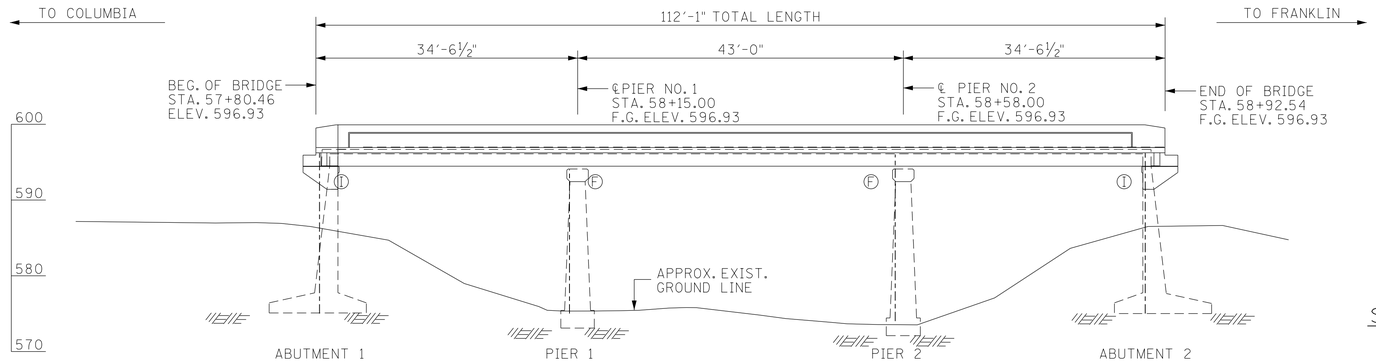

ELEVATION

Ⓘ DENOTES: INTEGRAL
Ⓕ DENOTES: FIXED

NOTE: ALL DIMENSIONS AND VERTICAL ELEVATIONS ARE BASED ON EXISTING PLAN INFORMATION AND FIELD MEASUREMENTS. PRIOR TO CONSTRUCTION, IT IS THE RESPONSIBILITY OF THE CONTRACTOR TO FIELD VERIFY ALL DIMENSIONS.

SCOPE OF WORK

1. PROVIDE REQUIRED TRAFFIC CONTROL TO MAINTAIN AT LEAST ONE 9'-0" LANE OF TRAFFIC AT ALL TIMES.
2. PROVIDE SPALL REPAIRS WITH HIGH EARLY STRENGTH CONCRETE AND POLYMER MODIFIED CEMENTITIOUS MATERIAL TO ABUTMENTS AND PIERS.
3. EPOXY INJECT CRACKED CONCRETE AT ABUTMENTS AND PIERS.
4. REMOVE EXISTING ASPHALT OVERLAY FOR THE ENTIRE LENGTH OF BRIDGE AND APPOPRIATE TRANSITION LENGTH BEYOND EACH END OF BRIDGE.
5. REMOVE THE SUPERSTRUCTURE IN PHASES AND REPLACE WITH PRECAST, PRESTRESSED CONCRETE GIRDER SUPERSTRUCTURE WITH A CAST-IN-PLACE DECK. TRAVELWAY ON NEW SUPERSTRUCTURE TO MATCH THAT OF APPROACH ROADWAY.
6. WIDEN AND RECONSTRUCT PIER CAPS AS NEEDED.
7. WIDEN APPROACH ROADWAY AS NEEDED TO ACCOMMODATE WIDENING.
8. PROVIDE TEXTURE COATING FOR NEW PARAPETS, OUTSIDE BEAMS, AND BOTTOM SIDE OF DECK IN OVERHANG AS WELL AS EXPOSED FACES OF EXISTING ABUTMENTS AND PIERS.
9. INSTALL NEW GUARDRAIL AT BRIDGE ENDS.
10. PROVIDE NEW ASPHALT TRANSITIONS TO EXISTING ASPHALT.

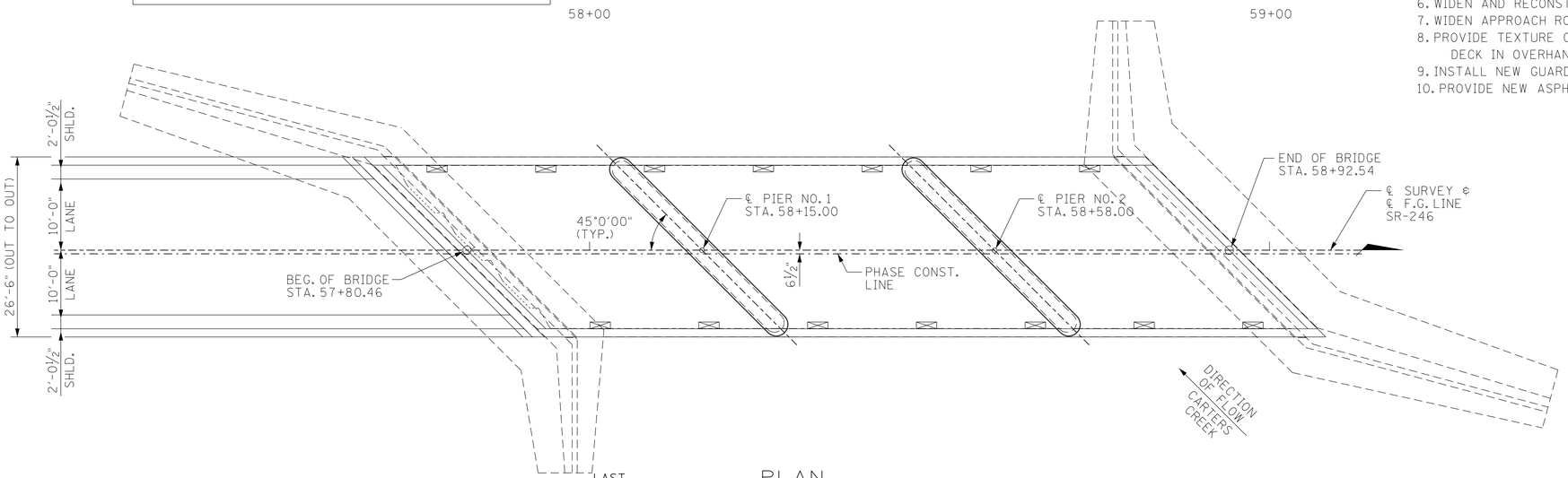

PLAN

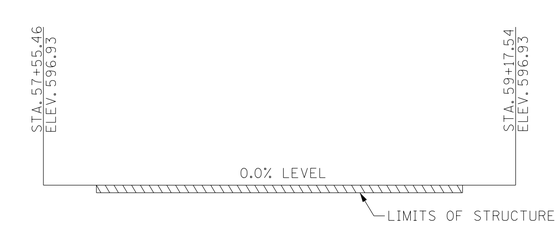

GRADE SKETCH

NOTE:
GRADE SET AT TOP OF EXISTING ASPHALT OVERLAY, WHICH IS 596.60 FROM EXISTING PLANS PLUS 4" ASPHALT OVERLAY PER LATEST TDOT INSPECTION REPORT.

LIST OF BRIDGE DRAWINGS

	DWG. NO.	LAST REV. DATE
LAYOUT OF BRIDGE TO BE REPAIRED	BR-122-84	
ESTIMATED BRIDGE QUANTITIES	BR-122-85	
BRIDGE GENERAL NOTES	BR-122-86	
PHASING PLAN	BR-122-87	
SUPERSTRUCTURE	BR-122-88	
SUPERSTRUCTURE DETAILS (1)	BR-122-89	
SUPERSTRUCTURE DETAILS (2)	BR-122-90	
PRESTRESSED BOX BEAM DETAILS (SPANS 1 & 3)	BR-122-91	
PRESTRESSED BOX BEAM DETAILS (SPAN 2)	BR-122-92	
ABUTMENT/PIER DEMOLITION DETAILS	BR-122-93	
ABUTMENT NO. 1	BR-122-94	
ABUTMENT NO. 2	BR-122-95	
ABUTMENT DETAILS	BR-122-96	
PIER NO. 1	BR-122-97	
PIER NO. 2	BR-122-98	
PIER DETAILS	BR-122-99	
MISCELLANEOUS REPAIR DETAILS	BR-122-107	

LIST OF REFERENCE DRAWINGS

(TO BE PRINTED WITH PLANS)

	DWG. NO.
EXISTING BRIDGE PLANS	F-5-128 THRU F-5-130, F-2-85 AND F-2-86, A-0-10, AND E-8-24

LIST OF SPECIAL PROVISIONS

NO.	LAST REVISION DATE	REGARDING
202ACM	7-7-14	REMOVAL OF ASBESTOS CONTAINING MATERIALS (ACM)
604CR	2-19-96	REPAIR OF BRIDGE DECK CRACKS

LIST OF BRIDGE STANDARD DRAWINGS

	DWG. NO.	LAST REV. DATE
BRIDGE RAILING SINGLE SLOPE CONCRETE PARAPET	STD-1-1SS	5-1-14
STEEL SLIDER PLATE ASSEMBLIES FOR SINGLE SLOPE CONCRETE PARAPET AND BRIDGE DECK DRAIN DETAILS	STD-1-2SS	
BRIDGE MOUNTED INTERCONNECTED PORTABLE BARRIER RAIL	STD-2-1	11-1-10
STD. PRECAST PRESTRESSED BRIDGE DECK PANELS GENERAL DETAILS	STD-4-1	4-8-05
STD. PRECAST PRESTRESSED BRIDGE DECK PANELS DESIGN CRITERIA	STD-4-2	4-8-05
STD. PRECAST PRESTRESSED BRIDGE DECK PANELS GENERAL DETAILS	STD-4-3	3-2-02
STD. PRECAST PRESTRESSED BRIDGE DECK PANELS CONSTRUCTION DETAILS	STD-4-4	6-10-96
STD. SEISMIC DETAILS	STD-6-1	11-01-10
REINFORCING BAR SUPPORT DETAILS FOR CONCRETE SLABS	STD-9-1	10-7-08
MISC. ABUTMENT AND DRAINAGE DETAILS	STD-10-3	4-08-05
STD. DETAILS FOR PRESTRESSED BOX BEAMS	STD-14-3	10-15-08

⊠ DENOTES: PARAPET TYPE DECK DRAIN. SEE STD. DWG. NO. STD-1-2SS.

DECK DRAIN LOCATIONS

LEFT	RIGHT
57+76.50	58+00.50
57+92.50	58+16.50
58+08.50	58+32.50
58+24.50	58+48.50
58+40.50	58+64.50
58+56.50	58+80.50
58+72.50	58+96.50

STATE ROUTE 246 2014 EST. ADT = 2,570
POSTED SPEED LIMIT = 40 M.P.H.

UNOFFICIAL SET
NOT FOR BIDDING

STATE OF TENNESSEE
DEPARTMENT OF TRANSPORTATION
BRIDGE NO. 1
LAYOUT OF BRIDGE TO BE REPAIRED
STATE ROUTE 246
OVER CARTERS CREEK
AT L.M. 1.07
BR. NO. 60S61810003
MAURY COUNTY
2016

BR-122-84

DESIGNED BY	VOLKERT	DATE	10/2015
DRAWN BY	C. DIXON/D. HOWARD	DATE	10/2015
SUPERVISED BY	J. ECKEL	DATE	9/2016
CHECKED BY	A. DAVIDSON	DATE	9/2016

VOLKERT

21-SEP-2016 23:48
535000 TDOT Bridge Repair\535003.17_SR246_over_MayhornBranch&_CartersCreek\DGN\Bridge\101_CC_Layout.dgn

PROJECT NO.	YEAR	SHEET NO.
60015-4204-04	2016	____

REVISIONS

NO.	DATE	BY	BRIEF DESCRIPTION

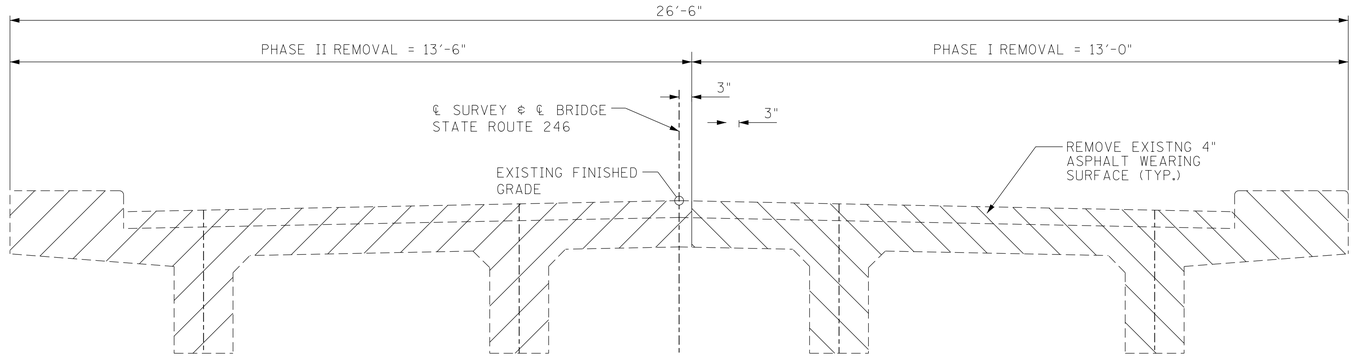

TYPICAL SECTION - DEMOLITION SKETCH

(LOOKING FORWARD ON SURVEY)

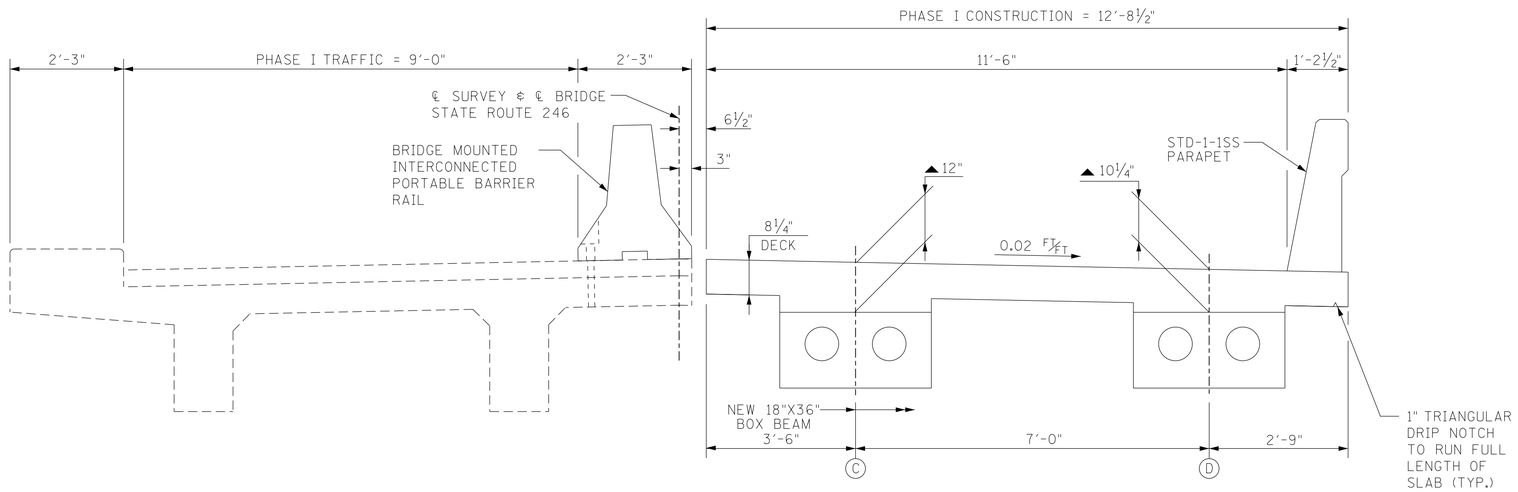

TYPICAL SECTION - PHASE I CONSTRUCTION

(LOOKING FORWARD ON SURVEY)

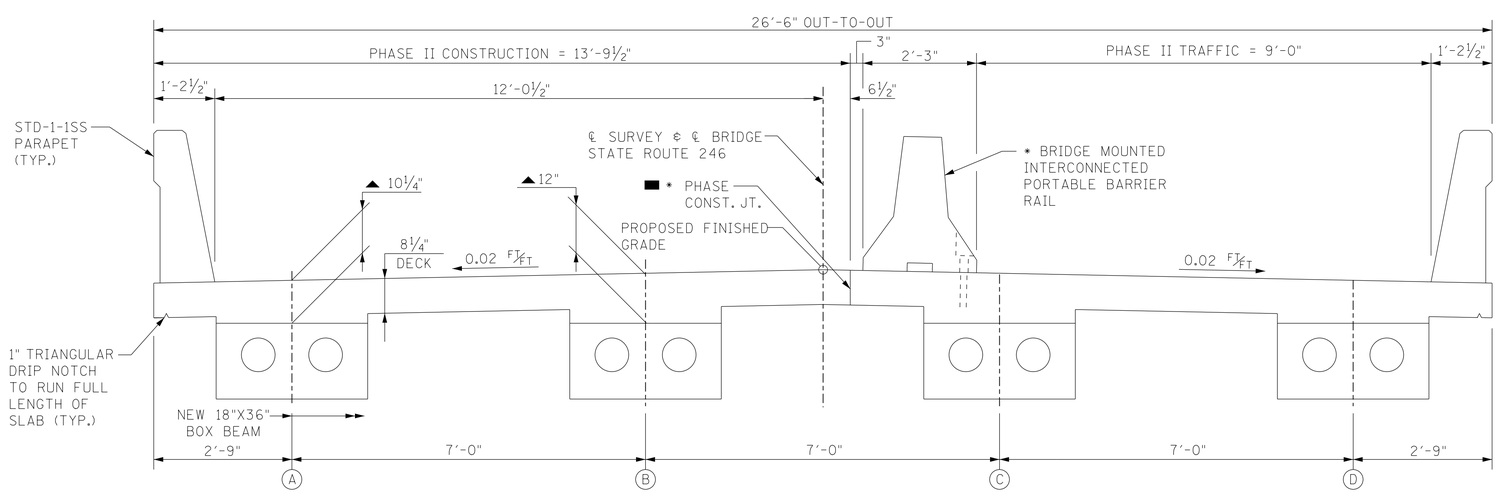

TYPICAL SECTION - PHASE II CONSTRUCTION

(LOOKING FORWARD ON SURVEY)

NOTE:
THE COST OF REMOVING AND DISPOSING OF THE EXISTING CONCRETE CURB, BRIDGE RAILS, SLAB AND GIRDERS IS TO BE INCLUDED IN ITEM NO. 202-04.01, REMOVAL OF STRUCTURES, LS.

* NOTE:
ANCHOR BOLTS FOR BRIDGE MOUNTED INTERCONNECTED PORTABLE BARRIER RAIL SHALL BE GROUTED INTO PLACE. ALL COSTS ASSOCIATED WITH GROUTING REMOVAL AT THE COMPLETION OF THE WORK, AND PATCHING OF THE DECK IN THE AREAS SHALL BE INCLUDED IN THE COST OF THE RAIL.

▲ NOTE:
PROVIDED DIMENSION AT ℄ BEARING. THIS DIMENSION VARIES ALONG SPAN TO COMPENSATE FOR VARIATIONS IN BEAM CAMBER.

■ * DENOTES:
CONTRACTOR TO SEAL LONGITUDINAL DECK CRACK WITH (HMWM) CRACK SEALANT.

STATE OF TENNESSEE
DEPARTMENT OF TRANSPORTATION

BRIDGE NO. 1
PHASING PLAN
STATE ROUTE 246
OVER CARTERS CREEK
AT L.M. 1.07
BR. NO. 60S61810003
MAURY COUNTY
2016

UNOFFICIAL SET
NOT FOR BIDDING

DESIGNED BY	VOLKERT	DATE	10/2015
DRAWN BY	C. DIXON/D. HOWARD	DATE	10/2015
SUPERVISED BY	J. ECKEL	DATE	9/2016
CHECKED BY	A. DAVIDSON	DATE	9/2016

VOLKERT

BR-122-87

21-SEP-2016 23:48
535000 TDOT Bridge Repair\535003.17_SR246_over_MayhornBranch&_CartersCreek\DGN\Bridge\03_CC_Phasing Plan.dgn

PROJECT NO.	YEAR	SHEET NO.
60015-4204-04	2016	

REVISIONS

NO.	DATE	BY	BRIEF DESCRIPTION

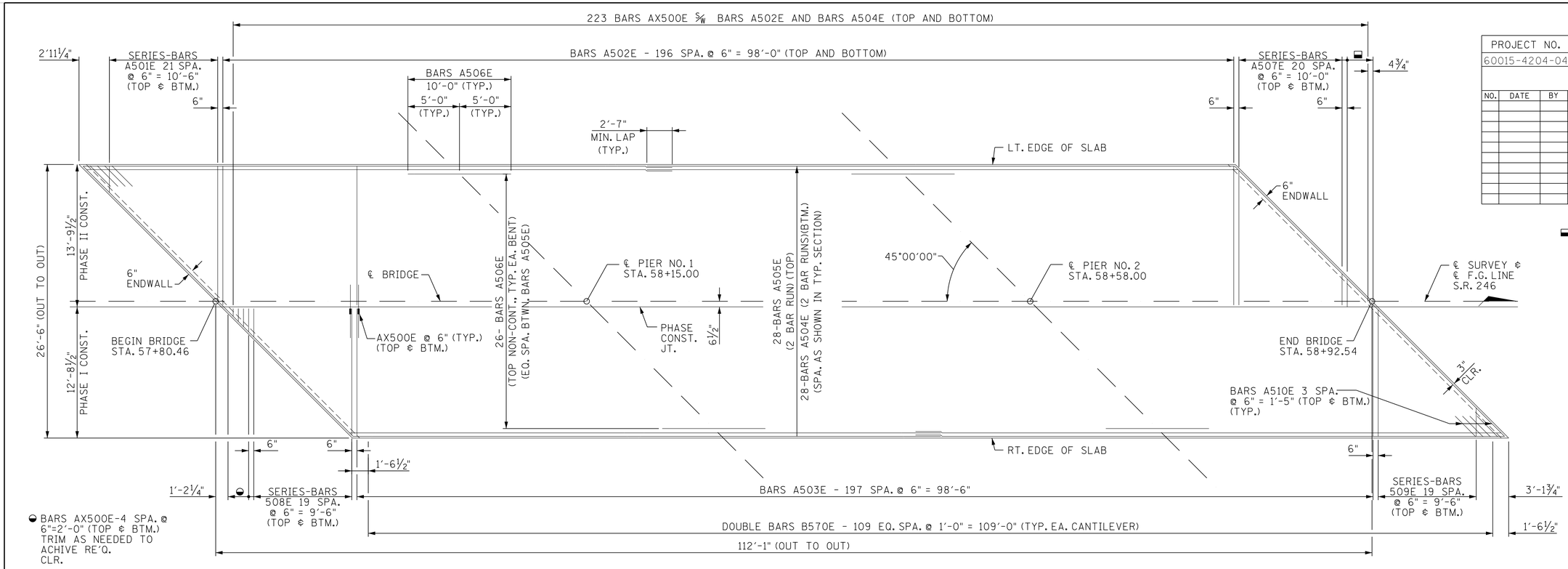

SLAB PLAN

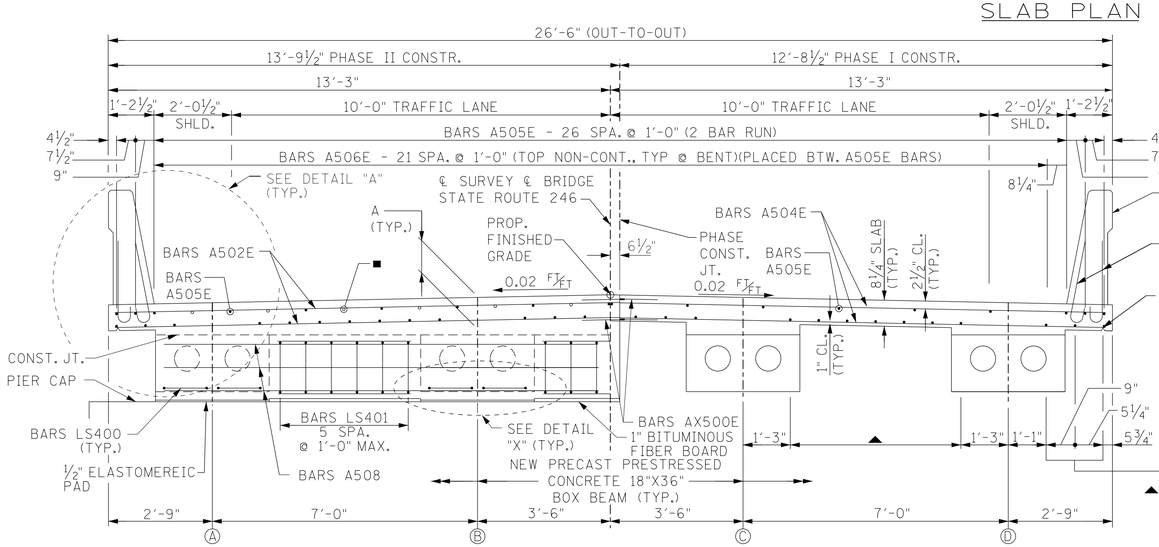

■ BARS A506E (TOP NON-CONT.,) (PLACED BTW. A505E BARS)

▲ BARS A504E (2 BARS RUNS), 6 EQ. SPA. @ 9"=4'-6" (TYP. BTWN. BEAMS)

TYPICAL AT PIER

TYPICAL AT MID-SPAN

TYPICAL CROSS SECTION

(LOOKING FORWARD ON SURVEY)

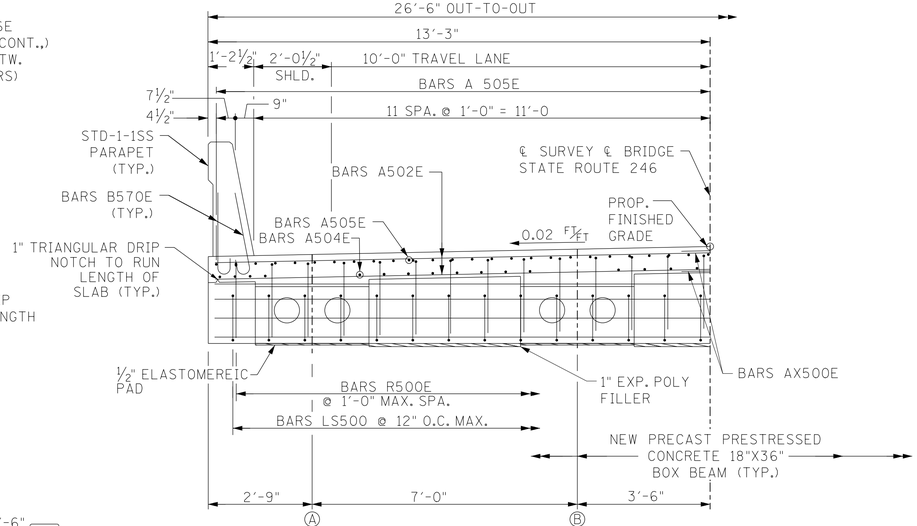

TYPICAL AT ABUTMENT

TYPICAL CROSS SECTION

(LOOKING FORWARD ON SURVEY)

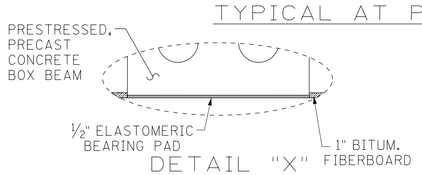

DETAIL "X"

"A"	
BEAM	*DEPTH
A	10¼"
B	12"
C	12"
D	10¼"

* AT ℄ BEARING. VARIES IN SPAN TO COMPENSATE FOR VARATIONS IN BEAM CAMBER.

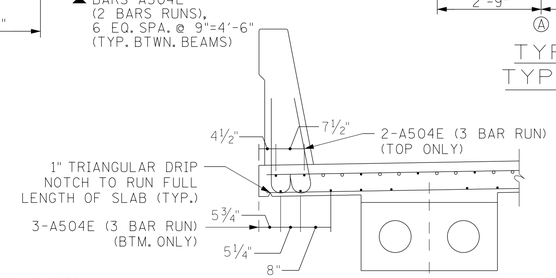

DETAIL "A"

DESIGNED BY	VOLKERT	DATE	10/2015
DRAWN BY	C. DIXON/D. HOWARD	DATE	10/2015
SUPERVISED BY	J. ECKEL	DATE	9/2016
CHECKED BY	A. DAVIDSON	DATE	9/2016

VOLKERT

UNOFFICIAL SET

NOT FOR BIDDING

STATE OF TENNESSEE
DEPARTMENT OF TRANSPORTATION

BRIDGE NO. 1
SUPERSTRUCTURE

STATE ROUTE 246
OVER CARTERS CREEK
AT L.M. 1.07
BR. NO. 60S61810003
MAURY COUNTY
2016

BR-122-88

21-SEP-2016 23:49
535000 TDOT Bridge Repair\535003.17_SR246_over_MayhornBranch&_CartersCreek\DGN\Bridge\104_CC_Superstructure.dgn

PROJECT NO.	YEAR	SHEET NO.
60015-4204-04	2016	____

REVISIONS

NO.	DATE	BY	BRIEF DESCRIPTION

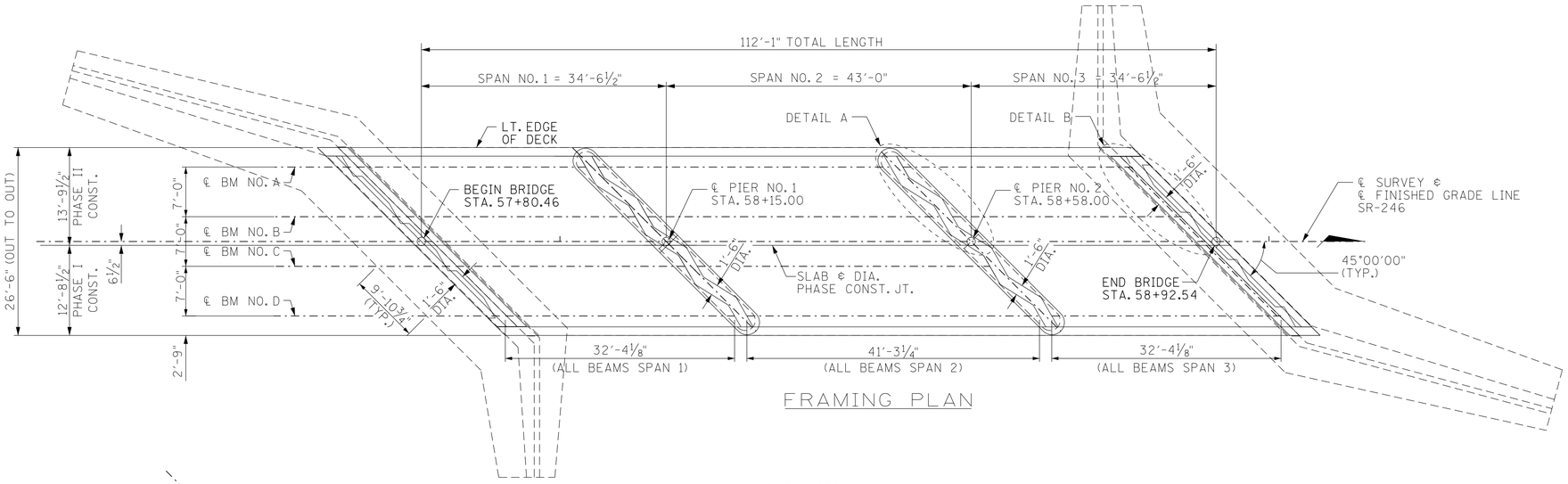

FRAMING PLAN

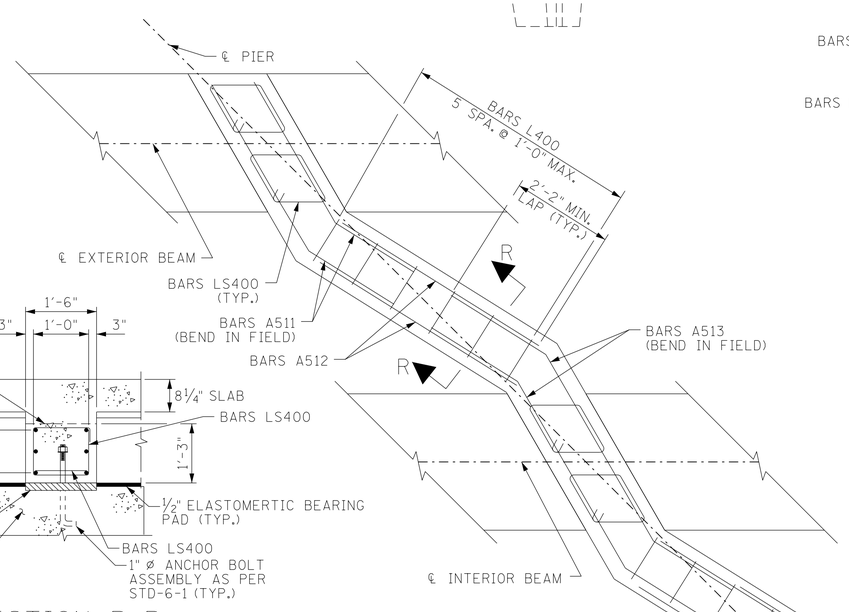

SECTION R-R
(TYP. EACH PIER)

SPECIAL NOTE FOR ANCHOR BOLTS AT PIERS:
ANCHOR BOLT ASSEMBLIES AT PIERS SHALL BE IN ACCORDANCE WITH STANDARD DRAWING STD-6-1. ANCHOR BOLT ASSEMBLIES MAY BE DRILLED AND GROUTED IN ACCORDANCE WITH MANUFACTURER'S RECOMMENDATIONS USING AN APPROVED ANCHORING SYSTEM. BOLT PROJECTION 11". OMIT HOOK ON ANCHOR BOLT IN THIS CASE.

THE SUPPORT DIAPHRAGMS AT PIERS SHALL BE FORMED AND THE BOTTOM 15 INCHES POURED AS SOON AS POSSIBLE AFTER THE BEAMS HAVE BEEN SET. THE REMAINDER OF THE DIAPHRAGM SHALL BE POURED CONCURRENTLY WITH THE DECK SLAB. THE BEAMS SHALL ATTAIN AN AGE OF AT LEAST 90 DAYS PRIOR TO POURING THE REMAINDER OF THE SUPPORT DIAPHRAGMS AND DECK SLAB. ALL DIAPHRAGM CONCRETE SHALL BE INCLUDED IN THE QUANTITY FOR ITEM NO. 604-03.09.

E.F. DENOTES EACH FACE

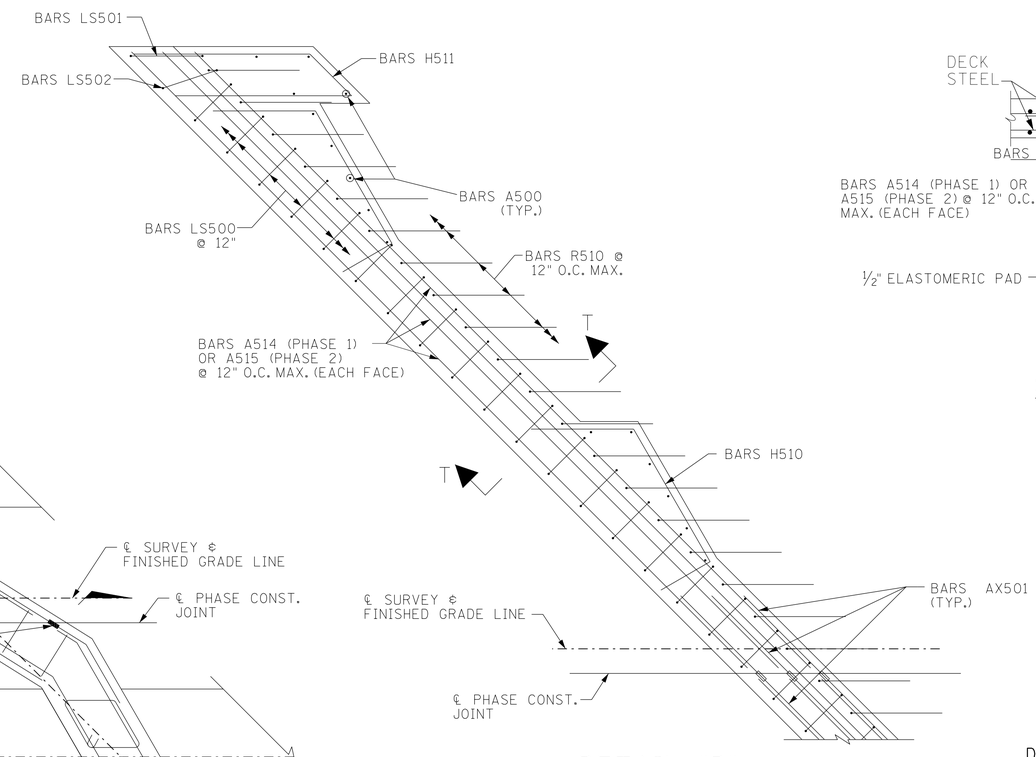

DETAIL "A"
(TYP. EACH PIER)

DETAIL "B"
(TYP. EACH ABUT.)

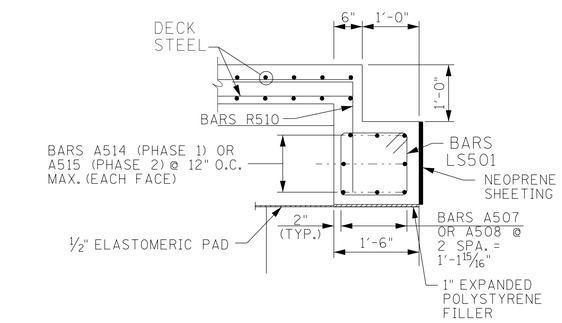

SECTION T-T

UNOFFICIAL SET

NOT FOR BIDDING

STATE OF TENNESSEE
DEPARTMENT OF TRANSPORTATION
BRIDGE NO. 1
SUPERSTRUCTURE
DETAILS (1)
STATE ROUTE 246
OVER CARTERS CREEK
AT L.M. 1.07
BR. NO. 60S61810003
MAURY COUNTY
2016

BR-122-89

DESIGNED BY	VOLKERT	DATE	10/2015
DRAWN BY	C. DIXON/D. HOWARD	DATE	10/2015
SUPERVISED BY	J. ECKEL	DATE	9/2016
CHECKED BY	A. DAVIDSON	DATE	9/2016

VOLKERT

21-SEP-2016 23:48
535000 TDOT Bridge Repair\535003.17_SR246_over_MayhornBranch&_CartersCreek\DGN\Bridge\105_CC_Super-Details (1).dgn

PROJECT NO.	YEAR	SHEET NO.
60015-4204-04	2016	____

REVISIONS

NO.	DATE	BY	BRIEF DESCRIPTION

SUPERSTRUCTURE BILL OF STEEL

BAR	SIZE	LOCATION	NO. REQ'D.	BENDING DIMENSION A	B	C	D	LENGTH
B570E	5	SLAB/RAIL	440	2'-8"				3'-3"
A501E	5	SLAB (SERIES)	1	13'-0"	FROM			7'-9"
				2'-6"	TO	(22-BAR)		
A502E	5	SLAB	394	13'-6"				13'-6"
A503E	5	SLAB	396	12'-4"				12'-4"
A504E	5	SLAB	56	57'-3"				57'-3"
A505E	5	SLAB	56	57'-3"				57'-3"
A506E	5	SLAB (NON-CONT)	52	10'-0"				10'-0"
A507E	5	SLAB (SERIES)	1	13'-0"	FROM			8'-0"
				3'-0"	TO	(21-BAR)		
A508E	5	SLAB (SERIES)	1	12'-3"	FROM			7'-6"
				2'-9"	TO	(20-BAR)		
A509E	5	SLAB (SERIES)	1	12'-3"	FROM			7'-6"
				2'-9"	TO	(20-BAR)		
A510E	5	SLAB	16	2'-10"				2'-10"
AX500E	5	SLAB	223	2'-4"				4'8"
A500	5	DIAPH/ABUT	56	2'-0"				2'-0"
A514	5	DIAPH/ABUT	16	19'-2"				19'-2"
A515	5	DIAPH/ABUT	16	17'-8"				17'-8"
H510	5	DIAPH/ABUT	24	3'-4"	1'-3"	2'-3"		6'-10"
H511	5	DIAPH/ABUT	12	1'-3"	3'-10"			8'-11"
LS500	5	DIAPH/ABUT	70	1'-2"	1'-1"			4'-8"
LS501	5	DIAPH/ABUT	4	1'-7"	1'-2"			5'-6"
LS502	5	DIAPH/ABUT	4	1'-3"	1'-2"			4'-10"
R510E	5	DIAPH/ABUT	74	2'-0"	1'-11"			3'-11"
AX501	5	DIAPH/ABUT	16	2'-7"				5'-2"
A511	5	DIAPH/PIER	24	7'-2"				7'-2"
A512	5	DIAPH/PIER	48	5'-2"				5'-2"
A513	5	DIAPH/PIER	24	9'-9"				9'-9"
LS400	4	DIAPH/PIER	52	1'-2"	1'-2"			4'-8"
AX501	5	DIAPH/PIER	12	2'-7"				5'-2"

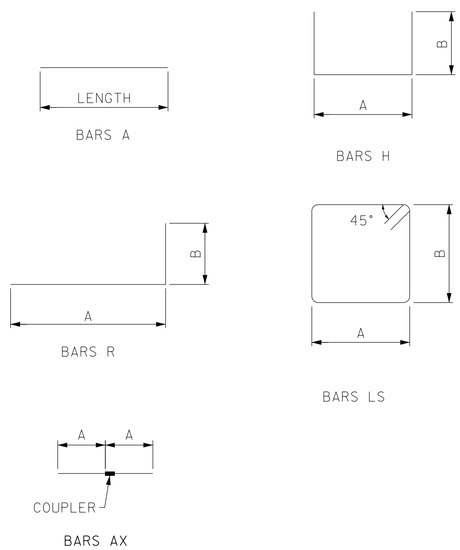

NOTES:

1. WHEN POURING SLAB, PROVISIONS SHALL BE MADE FOR SETTING REINFORCING STEEL FOR PARAPET.
2. ALL COST TO FURNISH AND INSTALL ALL SLAB STEEL SHALL BE PAID FOR UNDER ITEM NO. 604-02.03, EPOXY COATED REINFORCING STEEL (LB.).
3. THE CONTRACTOR IS SOLELY RESPONSIBLE FOR SUPPORTING THE BEAMS TO PREVENT DAMAGE DUE TO TWISTING OR OVERTURNING DURING ALL PHASES OF CONSTRUCTION. IT IS STRONGLY RECOMMENDED THAT THE TEMPORARY ERECTION DIAPHRAGMS BE INSTALLED PRIOR TO PLACING ANY LOADS ON THE GIRDERS. HOWEVER, TEMPORARY ERECTION DIAPHRAGMS MUST BE IN PLACE IN THE SPAN AT THE TIME THE SLAB IS POURED IN SAID SPAN.
4. NO PORTION OF THE PARAPET SHALL BE POURED UNTIL THE ENTIRE DECK SLAB IS IN PLACE.
5. CONTRACTOR SHALL OFFSET ANY REINFORCING NECESSARY TO MAINTAIN 2" CLEARANCE TO PHASE CONSTRUCTION JOINT.
6. FOR COUPLER BAR DETAIL, SEE DWG. NO. BR-122-107.

DECK CONCRETE POURING SEQUENCE:

SLAB CONSTRUCTION JOINTS MAY BE LOCATED AT THE CONTRACTOR'S OPTION SUBJECT TO THE FOLLOWING:

1. NO CONSTRUCTION JOINT MAY BE LOCATED CLOSER THAN 10' OR FURTHER THAN 15' FROM AN INTERIOR SUPPORT.
2. THE SLAB IN THE MIDDLE SECTION OF BOTH ADJACENT SPANS MUST BE POURED TO WITHIN AT LEAST 15' OF THE SUPPORTS EITHER PRIOR TO OR CONCURRENTLY WITH THE SLAB OVER AN INTERIOR SUPPORT

ALL SLAB CONSTRUCTION JOINTS SHALL BE IN ACCORDANCE WITH THE SLAB CONSTRUCTION JOINT DETAIL SHOWN ON DWG. NO. BR-122-107.

ESTIMATED QUANTITIES (SUPERSTRUCTURE)

CLASS "D" CONCRETE (BRIDGES DECK) C.Y.	EPOXY COATED REINFORCING STEEL LB.	STEEL BAR REINFORCEMENT (BRIDGES) LB.
97.9	22,129	2,520

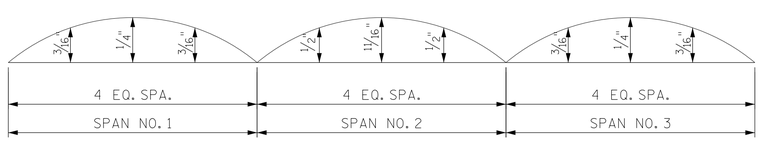

DEAD LOAD CORRECTION CURVE

DEAD LOAD CORRECTION CURVE: THIS CURVE IS FOR DEAD LOAD SLAB ND ALL DEAD LOADS THAT ARE APPLIED AFTER SLAB IS IN PLACE.

NOTE: IF PRESTRESSED DECK PANELS ARE USED AND THE BEAMS ARE PROFILED AFTER PANELS ARE IN PLACE, REDUCE THE DEAD LOAD CORRECTION VALUES BY 25%.

UNOFFICIAL SET

NOT FOR BIDDING

STATE OF TENNESSEE
DEPARTMENT OF TRANSPORTATION
BRIDGE NO. 1
SUPERSTRUCTURE
DETAILS (2)
STATE ROUTE 246
OVER CARTERS CREEK
AT L.M. 1.07
BR. NO. 60S61810003
MAURY COUNTY
2016

BR-122-90

DESIGNED BY	VOLKERT	DATE	10/2015
DRAWN BY	C. DIXON/D. HOWARD	DATE	10/2015
SUPERVISED BY	J. ECKEL	DATE	9/2016
CHECKED BY	A. DAVIDSON	DATE	9/2016

VOLKERT

21-SEP-2016 23:49
535000 TDOT Bridge Repair\535003JT_SR246_over_MayhornBranch&_CartersCreek\DGN\Bridge\106_CC_Super_Details (2).dgn

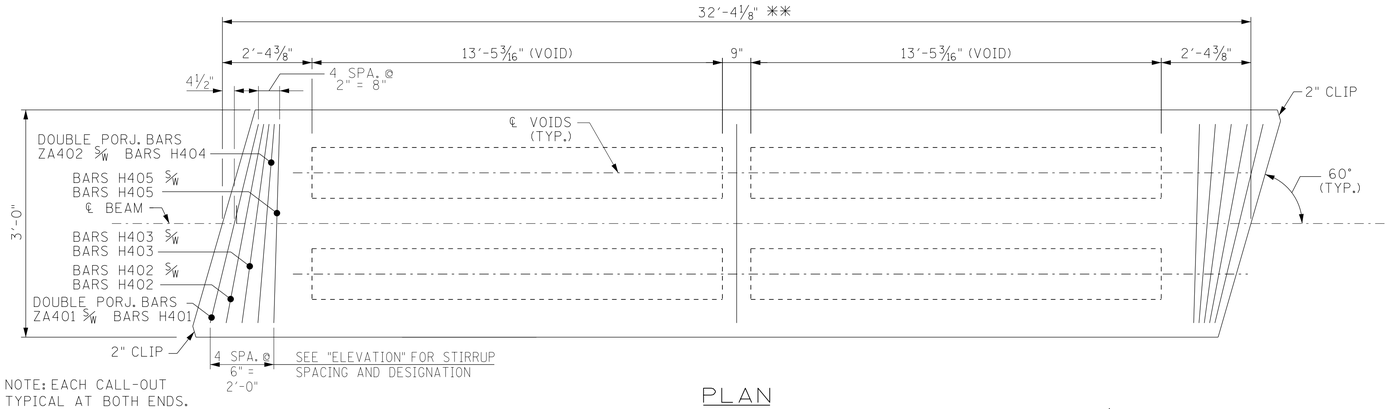

NOTE: EACH CALL-OUT TYPICAL AT BOTH ENDS.

① DBL. PROJ. BARS ZA400 S/W 1-H400 4 SPA. @ 12" O.C. = 4'-0"

② BAR H400 S/W BAR H400 4 SPA. @ 12" O.C. 4'-0"

③ BAR H400 S/W BAR H400 3 SPA. @ 12" O.C. = 3'-0"

PLAN

(SHOWING PROPERTIES)

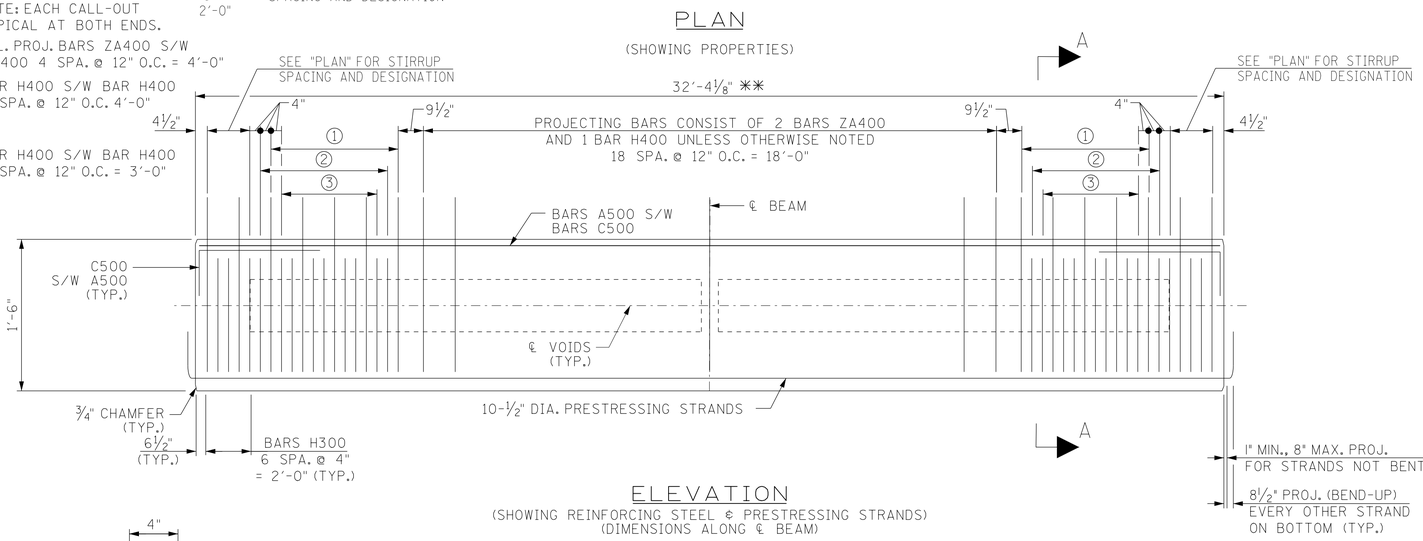

ELEVATION

(SHOWING REINFORCING STEEL & PRESTRESSING STRANDS)
(DIMENSIONS ALONG ℄ BEAM)

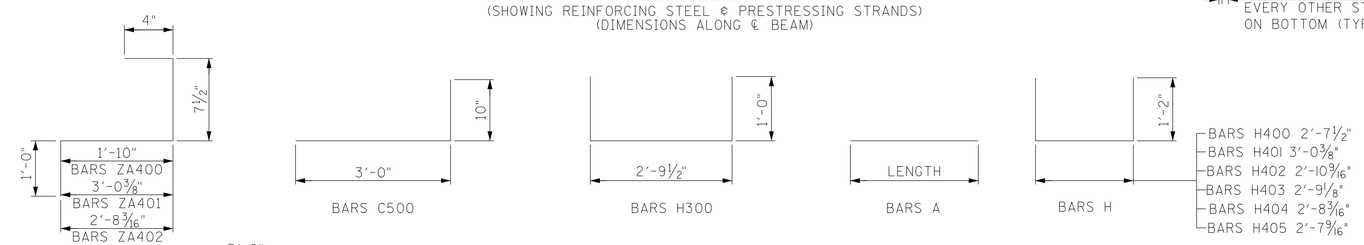

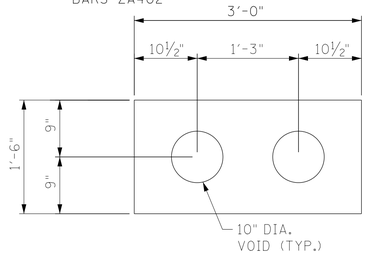

SECTION SHOWING PROPERTIES

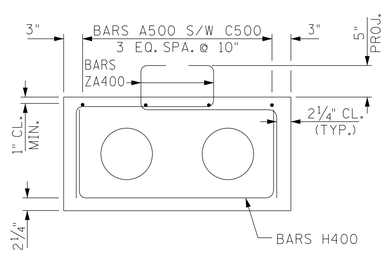

SECTION A-A

(SHOWING PROJECTING STIRRUPS)

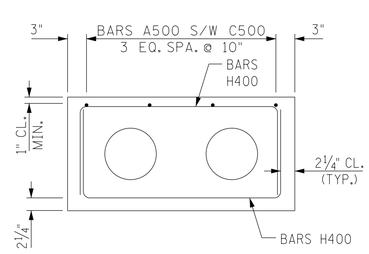

SECTION A-A

(SHOWING NON-PROJECTING STIRRUPS)

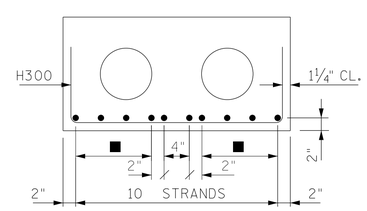

SECTION A-A

(SHOWING STRAND PATTERN)
■ DENOTES: 3 SPA. @ 4" = 1'-0"

NOTES:

1) THE CONCRETE FOR THIS CONSTRUCTION SHALL BE OF SUCH PROPERTIES AS TO ATTAIN A COMPRESSIVE STRENGTH OF NOT LESS THAN 6,000 PSI AT THE AGE OF 28 DAYS AND STRESS TRANSFER SHALL NOT BE MADE TO THE BRIDGE MEMBER UNTIL THE TEST SPECIMENS INDICATE THAT THE CONCRETE HAS REACHED A COMPRESSIVE STRENGTH OF AT LEAST 5,000 PSI. SEE GENERAL NOTES FOR CONCRETE FINISHING NOTE.

2) SEE STD-14-3 FOR BOX BEAM STANDARD DETAILS, NOTES AND REINFORCING.

3) ALL PRESTRESSING STRANDS SHALL BE ½" DIAMETER ASTM 270K, 7-WIRE UNCOATED LOW RELAXATION PRESTRESSING STRANDS.

4) AN INITIAL FORCE OF 31,000 LB. SHALL BE APPLIED TO EACH STRAND IN ALL BEAMS.

5) THE PRESTRESSED BEAMS SHALL ATTAIN AN AGE OF AT LEAST 90 DAYS PRIOR TO POURING SUPPORT DIAPHRAGMS AND DECK SLAB.

PROJECT NO.	YEAR	SHEET NO.
60015-4204-04	2016	

REVISIONS

NO.	DATE	BY	BRIEF DESCRIPTION

PRESTRESSED BEAM DESIGN DATA - PER BEAM:

LIVE LOAD DISTRIBUTION FACTORS (ONE LANE LOADED)

LIVE LOAD DISTRIBUTION FACTOR FOR NEGATIVE MOMENT (EXTERIOR BEAM) = 0.486 LANES PER BEAM
LIVE LOAD DISTRIBUTION FACTOR FOR NEGATIVE MOMENT (INTERIOR BEAM) = 0.330 LANES PER BEAM
LIVE LOAD DISTRIBUTION FACTOR FOR POSITIVE MOMENT (EXTERIOR BEAM) = 0.486 LANES PER BEAM
LIVE LOAD DISTRIBUTION FACTOR FOR POSITIVE MOMENT (INTERIOR BEAM) = 0.341 LANES PER BEAM
LIVE LOAD DISTRIBUTION FACTOR FOR SHEAR (EXTERIOR BEAM) = 0.708 LANES PER BEAM
LIVE LOAD DISTRIBUTION FACTOR FOR SHEAR (INTERIOR BEAM) = 0.692 LANES PER BEAM

LIVE LOAD DISTRIBUTION FACTORS (TWO LANES LOADED)

LIVE LOAD DISTRIBUTION FACTOR FOR NEGATIVE MOMENT (EXTERIOR BEAM) = 0.467 LANES PER BEAM
LIVE LOAD DISTRIBUTION FACTOR FOR NEGATIVE MOMENT (INTERIOR BEAM) = 0.475 LANES PER BEAM
LIVE LOAD DISTRIBUTION FACTOR FOR POSITIVE MOMENT (EXTERIOR BEAM) = 0.474 LANES PER BEAM
LIVE LOAD DISTRIBUTION FACTOR FOR POSITIVE MOMENT (INTERIOR BEAM) = 0.483 LANES PER BEAM
LIVE LOAD DISTRIBUTION FACTOR FOR SHEAR (EXTERIOR BEAM) = 0.688 LANES PER BEAM
LIVE LOAD DISTRIBUTION FACTOR FOR SHEAR (INTERIOR BEAM) = 0.822 LANES PER BEAM

DEAD LOADS

COMPOSITE DEAD LOAD: DC = 187.5 LB/FT PER BEAM; DW = 210.7 LB/FT PER BEAM
COMPOSITE SLAB DESIGN STRENGTH : f'c = 3,000 PSI

** CONTRACTOR IS TO FIELD VERIFY BEAM LENGTH PRIOR TO FABRICATING BEAMS.

NOTE: DOWNWARD DEFLECTION UNDER TOTAL DL IS NOT ALLOWED.

ESTIMATED QUANTITIES - PER BEAM

NO. BEAMS REQ'D.	PRESTRESSING STRANS (LOW-RELAXATION) LBS.	CLASS "A" CONCRETE C.Y.	REINFORCING STEEL LBS.
8	186	4.3	634

BILL OF STEEL PER BEAM

BAR	SIZE	NO. REQ'D	LENGTH
A500	5	4	32'-0"
C500	5	8	3'-10"
H300	3	14	4'-9½"
H400	4	65	4'-11½"
H401	4	2	5'-4⅜"
H402	4	4	5'-2⁹⁄₁₆"
H403	4	4	5'-1⅛"
H404	4	2	5'-0³⁄₁₆"
H405	4	4	4'-11 ⁹⁄₁₆"
ZA400	4	58	3'-9½"
ZA401	4	4	4'-11⅞"
ZA402	4	4	4'-7¹¹⁄₁₆"

UNOFFICIAL SET

NOT FOR BIDDING

STATE OF TENNESSEE
DEPARTMENT OF TRANSPORTATION
BRIDGE NO. 1
PRESTRESSED BOX BEAM
DETAILS (SPANS 1 & 3)
STATE ROUTE 246
OVER CARTERS CREEK
AT L.M. 1.07
BR. NO. 60S61810003
MAURY COUNTY
2016

BR-122-91

DESIGNED BY	VOLKERT	DATE	10/2015
DRAWN BY	C. DIXON/D. HOWARD	DATE	10/2015
SUPERVISED BY	J. ECKEL	DATE	9/2016
CHECKED BY	A. DAVIDSON	DATE	9/2016

VOLKERT

21-SEP-2016 23:49
535000 TDOT Bridge Repair\535003.17_SR246_over_MayhornBranch&_CartersCreek\DGN\Bridge\07_CC_Prest Box Beam Det 1&3.dgn

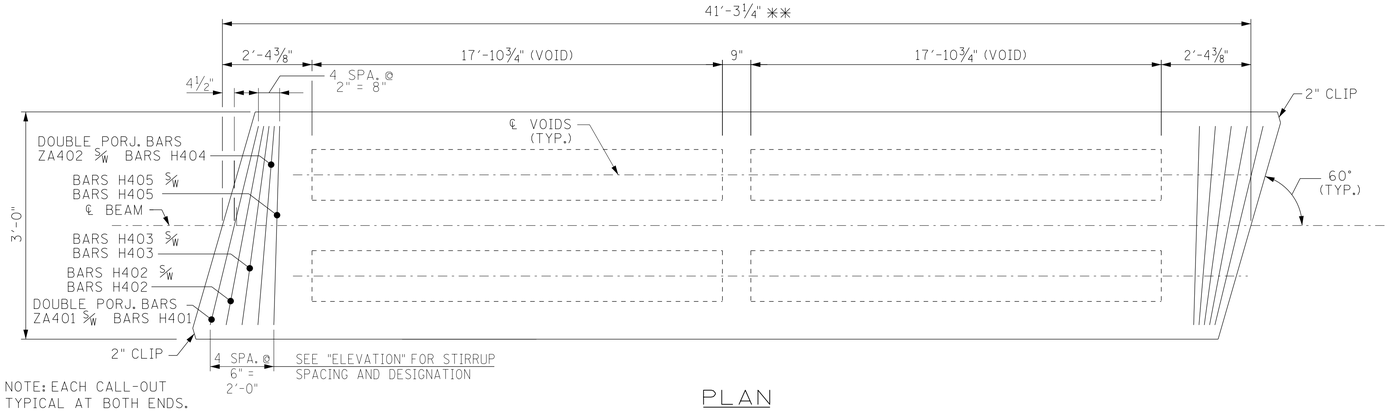

NOTE: EACH CALL-OUT TYPICAL AT BOTH ENDS.

① DBL. PROJ. BARS ZA400 S/W 1-H400 2 SPA. @ 12" O.C. = 2'-0"

② BAR H400 S/W BAR H400 2 SPA. @ 12" O.C. 2'-0"

③ BAR H400 S/W BAR H400 1 SPA. @ 12" O.C. = 1'-0"

PLAN

(SHOWING PROPERTIES)

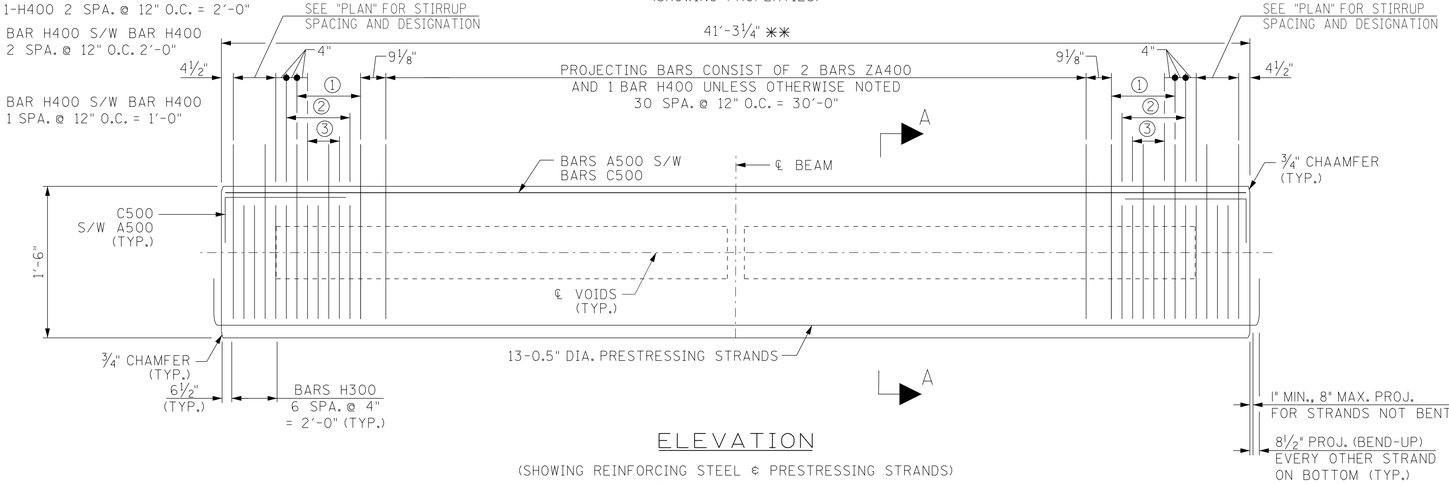

ELEVATION

(SHOWING REINFORCING STEEL & PRESTRESSING STRANDS)
(DIMENSIONS ALONG ℄ BEAM)

NOTES:

1) THE CONCRETE FOR THIS CONSTRUCTION SHALL BE OF SUCH PROPERTIES AS TO ATTAIN A COMPRESSIVE STRENGTH OF NOT LESS THAN 6,000 PSI AT THE AGE OF 28 DAYS AND STRESS TRANSFER SHALL NOT BE MADE TO THE BRIDGE MEMBER UNTIL THE TEST SPECIMENS INDICATE THAT THE CONCRETE HAS REACHED A COMPRESSIVE STRENGTH OF AT LEAST 5,000 PSI. SEE GENERAL NOTES FOR CONCRETE FINISHING NOTE.

2) SEE STD-14-3 FOR BOX BEAM STANDARD DETAILS, NOTES AND REINFORCING.

3) ALL PRESTRESSING STRANDS SHALL BE ½" DIAMETER ASTM 270K, 7-WIRE UNCOATED LOW RELAXATION PRESTRESSING STRANDS.

4) AN INITIAL FORCE OF 31,000 LB. SHALL BE APPLIED TO EACH STRAND IN ALL BEAMS.

5) THE PRESTRESSED BEAMS SHALL ATTAIN AN AGE OF AT LEAST 90 DAYS PRIOR TO POURING SUPPORT DIAPHRAGMS AND DECK SLAB.

PROJECT NO.	YEAR	SHEET NO.
60015-4204-04	2016	

REVISIONS

NO.	DATE	BY	BRIEF DESCRIPTION

PRESTRESSED BEAM DESIGN DATA - PER BEAM:

LIVE LOAD DISTRIBUTION FACTORS (ONE LANE LOADED)

LIVE LOAD DISTRIBUTION FACTOR FOR NEGATIVE MOMENT (EXTERIOR BEAM) = 0.486 LANES PER BEAM
LIVE LOAD DISTRIBUTION FACTOR FOR NEGATIVE MOMENT (INTERIOR BEAM) = 0.312 LANES PER BEAM
LIVE LOAD DISTRIBUTION FACTOR FOR POSITIVE MOMENT (EXTERIOR BEAM) = 0.486 LANES PER BEAM
LIVE LOAD DISTRIBUTION FACTOR FOR POSITIVE MOMENT (INTERIOR BEAM) = 0.302 LANES PER BEAM
LIVE LOAD DISTRIBUTION FACTOR FOR SHEAR (EXTERIOR BEAM) = 0.721 LANES PER BEAM
LIVE LOAD DISTRIBUTION FACTOR FOR SHEAR (INTERIOR BEAM) = 0.688 LANES PER BEAM

LIVE LOAD DISTRIBUTION FACTORS (TWO LANES LOADED)

LIVE LOAD DISTRIBUTION FACTOR FOR NEGATIVE MOMENT (EXTERIOR BEAM) = 0.453 LANES PER BEAM
LIVE LOAD DISTRIBUTION FACTOR FOR NEGATIVE MOMENT (INTERIOR BEAM) = 0.461 LANES PER BEAM
LIVE LOAD DISTRIBUTION FACTOR FOR POSITIVE MOMENT (EXTERIOR BEAM) = 0.446 LANES PER BEAM
LIVE LOAD DISTRIBUTION FACTOR FOR POSITIVE MOMENT (INTERIOR BEAM) = 0.454 LANES PER BEAM
LIVE LOAD DISTRIBUTION FACTOR FOR SHEAR (EXTERIOR BEAM) = 0.684 LANES PER BEAM
LIVE LOAD DISTRIBUTION FACTOR FOR SHEAR (INTERIOR BEAM) = 0.817 LANES PER BEAM

DEAD LOAD

COMPOSITE DEAD LOAD: DC = 187.5 LB/FT PER BEAM; DW = 210.7 LB/FT PER BEAM
COMPOSITE SLAB DESIGN STRENGTH : f'c = 3,000 PSI

** CONTRACTOR IS TO FIELD VERIFY BEAM LENGTH PRIOR TO FABRICATING BEAMS.

NOTE: DOWNWARD DEFLECTION UNDER TOTAL DL IS NOT ALLOWED.

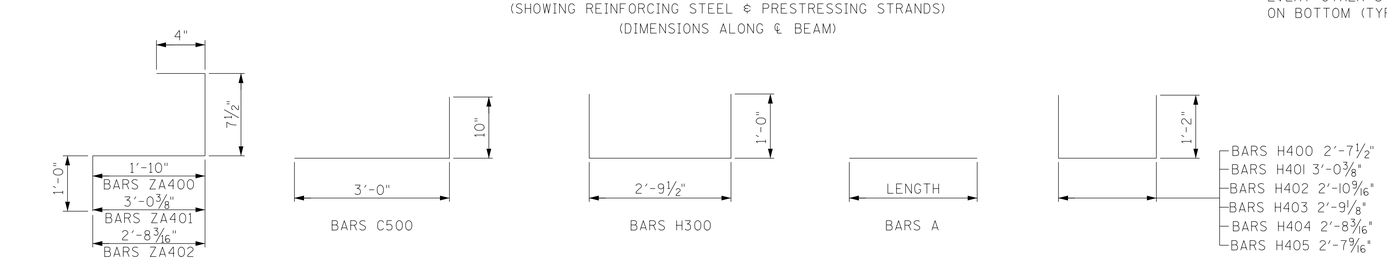

ESTIMATED QUANTITIES - PER BEAM			
NO. BEAMS REQ'D.	PRESTRESSING STRANS (LOW-RELAXATION) LBS.	CLASS "A" CONCRETE C.Y.	REINFORCING STEEL LBS.
4	304	5.42	693

BILL OF STEEL PER BEAM			
BAR	SIZE	NO. REQ'D	LENGTH
A500	5	4	40'-11"
C500	5	8	3'-10"
H300	3	14	4'-9½"
H400	4	58	4'-11½"
H401	4	2	5'-4⅜"
H402	4	4	5'-2 9/16"
H403	4	4	5'-1⅛"
H404	4	2	5'-0 3/16"
H405	4	4	4'-11 9/16"
ZA400	4	76	3'-9½"
ZA401	4	4	4'-11⅞"
ZA402	4	4	4'-7 11/16"

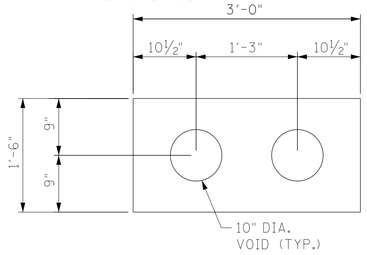

SECTION SHOWING PROPERTIES

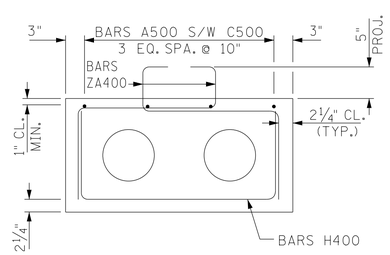

SECTION A-A

(SHOWING PROJECTING STIRRUPS)

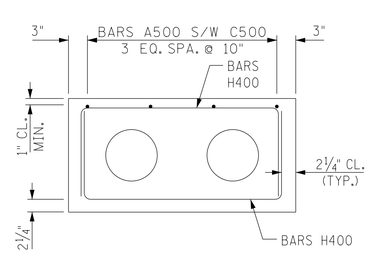

SECTION A-A

(SHOWING NON-PROJECTING STIRRUPS)

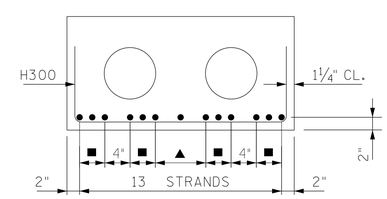

SECTION A-A

(SHOWING STRAND PATTERN)

■ DENOTES: 2 SPA. @ 2" = 4"
▲ DENOTES: 2 SPA. @ 4" = 8"

UNOFFICIAL SET

NOT FOR BIDDING

STATE OF TENNESSEE
DEPARTMENT OF TRANSPORTATION
BRIDGE NO. 1
PRESTRESSED BOX BEAM
DETAILS (SPAN 2)
STATE ROUTE 246
OVER CARTERS CREEK
AT L.M. 1.07
BR. NO. 60S61810003
MAURY COUNTY
2016

BR-122-92

DESIGNED BY	VOLKERT	DATE	10/2015
DRAWN BY	C. DIXON/D. HOWARD	DATE	10/2015
SUPERVISED BY	J. ECKEL	DATE	9/2016
CHECKED BY	A. DAVIDSON	DATE	9/2016

VOLKERT

21-SEP-2016 23:48
535000 TDOT Bridge Repair\535003.17_SR246_over_MayhornBranch&_CartersCreek\DGN\Bridge\08_CC_Prest Box Beam Det 2.dgn

PROJECT NO.	YEAR	SHEET NO.
60015-4204-04	2016	____

REVISIONS

NO.	DATE	BY	BRIEF DESCRIPTION

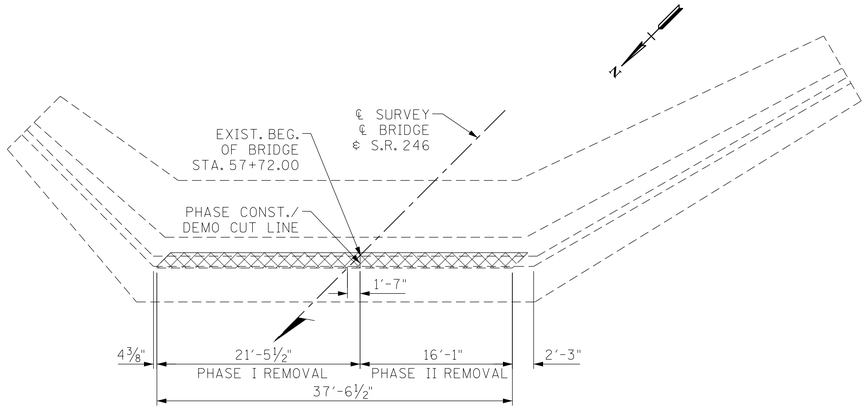

PLAN ABUTMENT 1

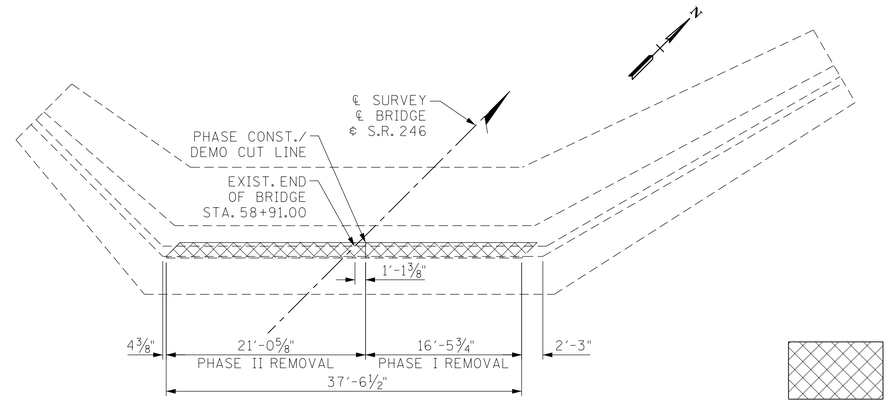

PLAN ABUTMENT 2

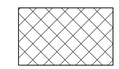

DENOTES: PORTION OF EXISTING STRUCTURE TO BE REMOVED

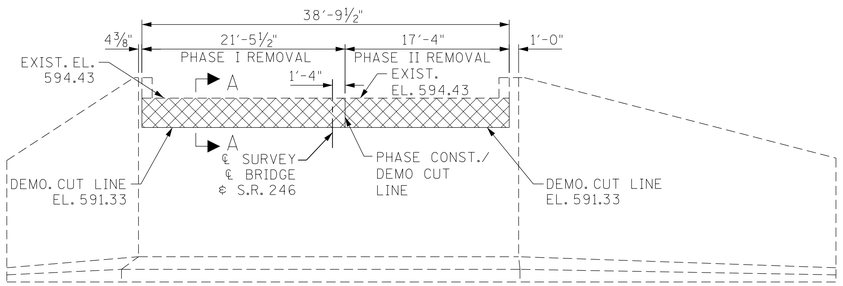

ELEVATION ABUTMENT 1
(LOOKING BACK ON SURVEY)

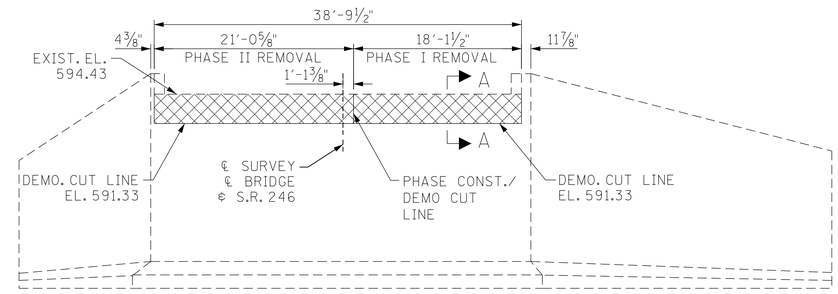

ELEVATION ABUTMENT 2
(LOOKING FORWARD ON SURVEY)

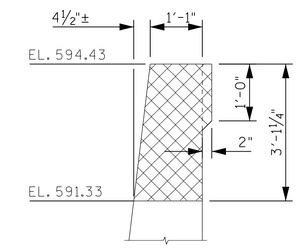

SECTION A-A

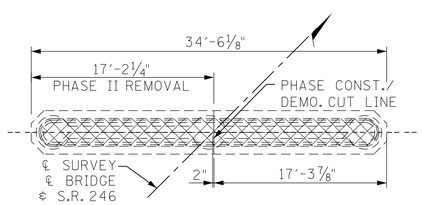

PLAN PIER 1

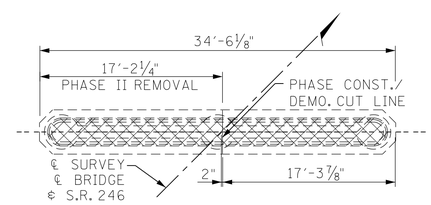

PLAN PIER 2

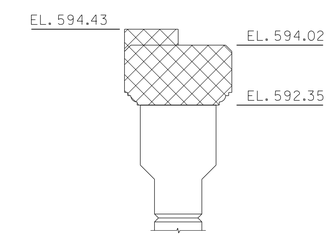

SECTION B-B

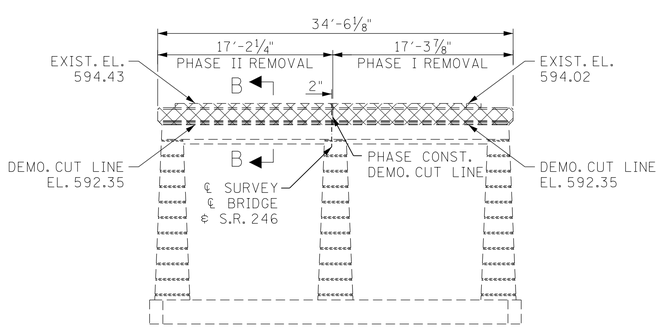

ELEVATION PIER 1
(LOOKING FORWARD ON SURVEY)

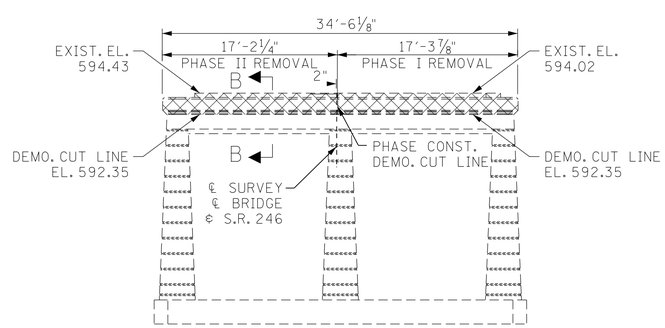

ELEVATION PIER 2
(LOOKING FORWARD ON SURVEY)

DESIGNED BY	VOLKERT	DATE	10/2015
DRAWN BY	C. DIXON/D. HOWARD	DATE	10/2015
SUPERVISED BY	J. ECKEL	DATE	9/2016
CHECKED BY	A. DAVIDSON	DATE	9/2016

VOLKERT

UNOFFICIAL SET

NOT FOR BIDDING

STATE OF TENNESSEE
DEPARTMENT OF TRANSPORTATION
BRIDGE NO. 1
ABUTMENT/PIER
DEMO. DETAILS
STATE ROUTE 246
OVER CARTERS CREEK
AT L.M. 1.07
BR. NO. 60S61810003
MAURY COUNTY
2016

BR-122-93

21-SEP-2016 23:48
535000 TDOT Bridge Repair\535003.17_SR246_over_MayhornBranch&_CartersCreek\DGN\Bridge\109_CC_Abut_Pier Demo Details.dgn

PROJECT NO.	YEAR	SHEET NO.
60015-4204-04	2016	____

REVISIONS

NO.	DATE	BY	BRIEF DESCRIPTION

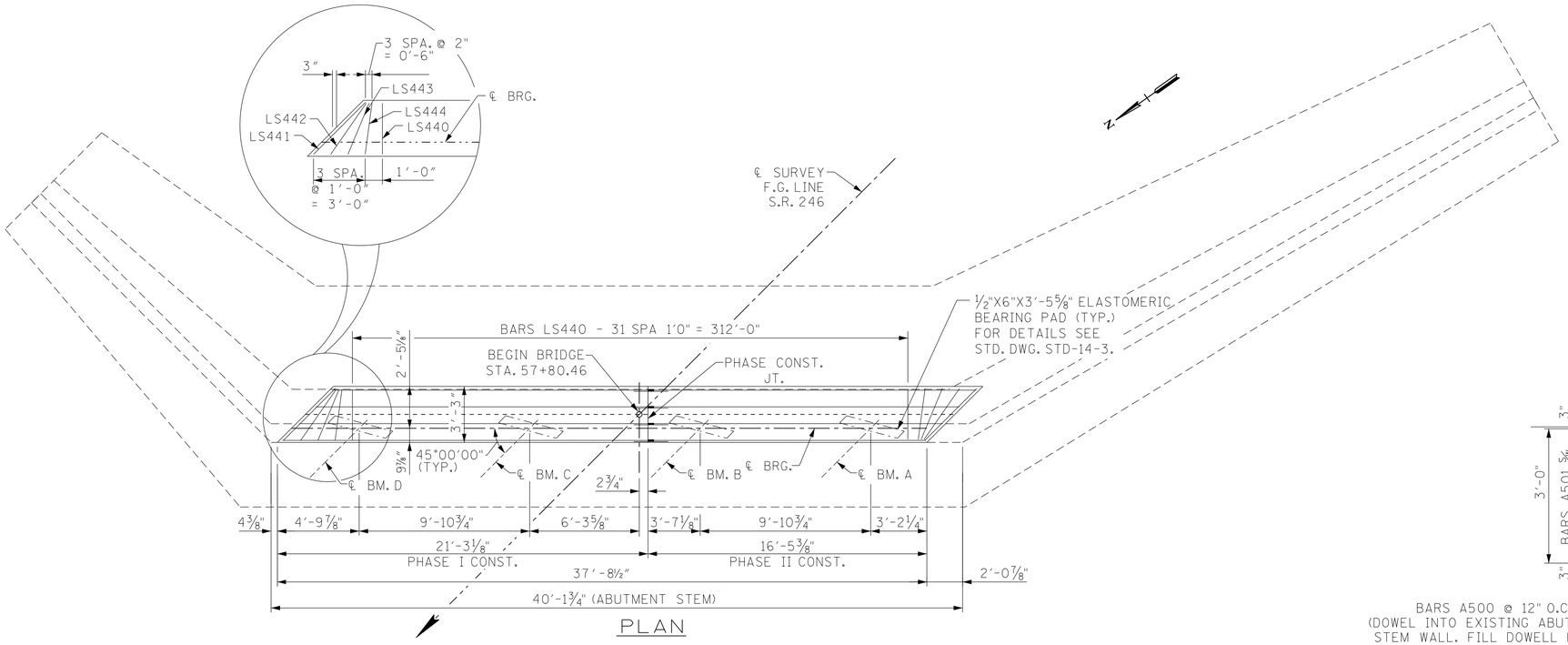

PLAN

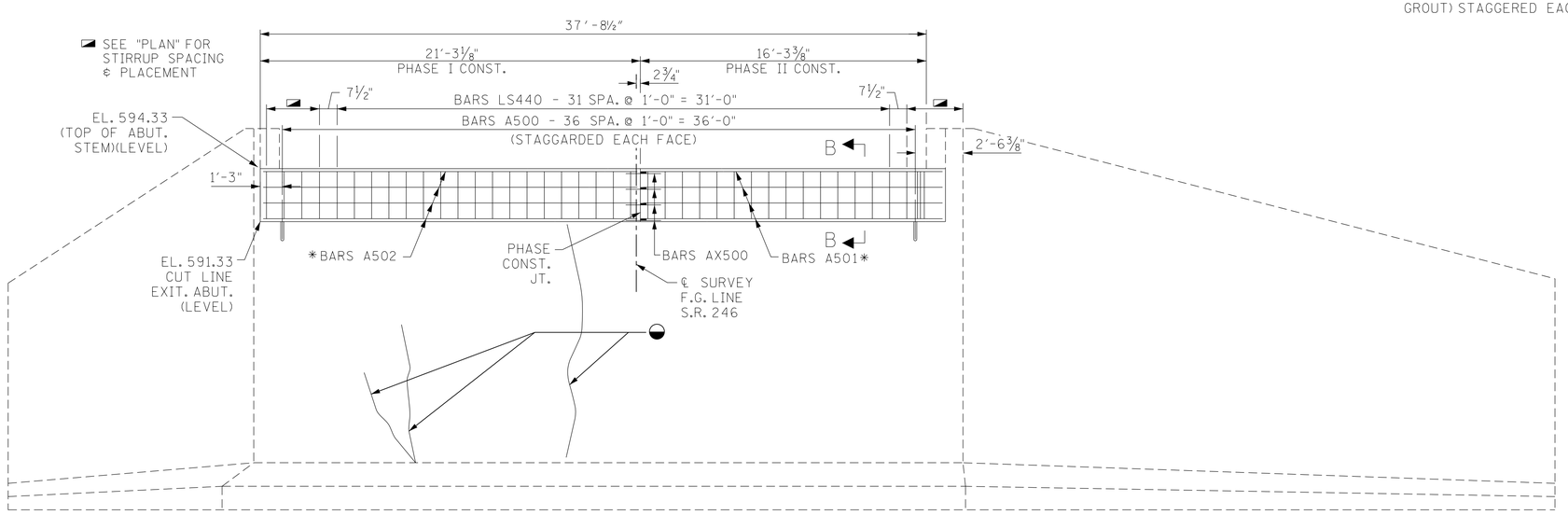

*NOTE: TRIM BARS AS NEEDED TO MAINTAIN MIN. 2" CLEARANCE.

ELEVATION ABUT. 1

(LOOKING BACK ON SURVEY)

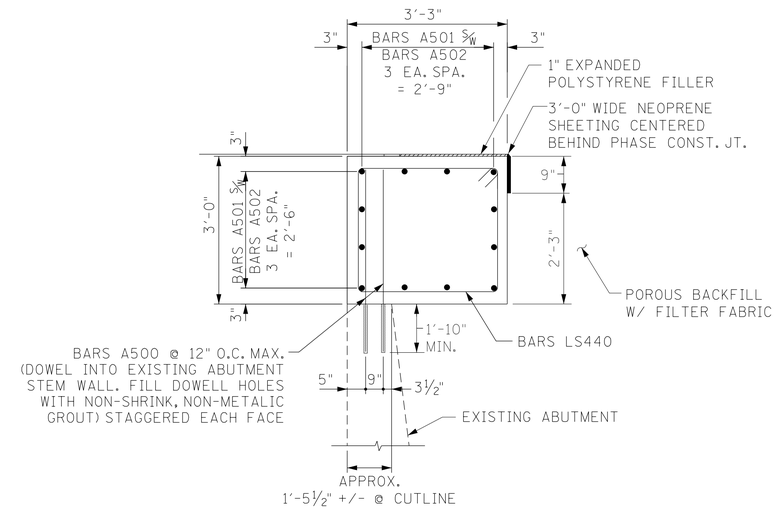

SECTION B-B

◒ DENOTES: FOR CRACK REPAIR BY EPOXY INJECTION, SEE SPECIAL NOTES FOR EPOXY INJECTION ON DWG. NO. BR-122-86.

NOTES:

1. ELASTOMERIC PADS SHALL BE IN PLACE A MINIMUM OF ONE DAY BEFORE BEING DISTURBED BY SETTING BEAMS. PLACE RUBBER BONDING CEMENT IN SUCH A WAY THAT VISIBLE CONCRETE SURFACES WILL NOT BE STAINED.

2. PRIOR TO PLACING NEW CONCRETE AGAINST ANY BROKEN OR SCARIFIED SURFACE, AN APPROVED EPOXY ADHESIVE SHALL BE APPLIED TO THE ROUGHENED CONCRETE.

SPECIAL NOTE FOR ANCHOR BOLTS AT ABUTMENTS:
ANCHOR BOLT ASSEMBLIES AT ABUTMENTS SHALL BE IN ACCORDANCE WITH STANDARD DRAWING STD-6-1 ANCHOR BOLT ASSEMBLIES MAY BE DRILLED AND GROUTED IN ACCORDANCE WITH MANUFACTURER'S RECOMMENDATIONS USING AN APPROVED ANCHORING SYSTEM. BOLT PROJECTION 11". OMIT HOOK ON ANCHOR BOLT, IN THIS CASE.

UNOFFICIAL SET

NOT FOR BIDDING

STATE OF TENNESSEE
DEPARTMENT OF TRANSPORTATION
BRIDGE NO. 1
ABUTMENT NO. 1

STATE ROUTE 246
OVER CARTERS CREEK
AT L.M. 1.07
BR. NO. 60S61810003
MAURY COUNTY
2016

BR-122-94

DESIGNED BY	VOLKERT	DATE	10/2015
DRAWN BY	C. DIXON/D. HOWARD	DATE	10/2015
SUPERVISED BY	J. ECKEL	DATE	9/2016
CHECKED BY	A. DAVIDSON	DATE	9/2016

VOLKERT

21-SEP-2016 23:49
535000 TDOT Bridge Repair\535003.17_SR246_over_MayhornBranch&_CartersCreek\DGN\Bridge\110_CC_Abutment No.1.dgn

PROJECT NO.	YEAR	SHEET NO.
60015-4204-04	2016	____

REVISIONS

NO.	DATE	BY	BRIEF DESCRIPTION

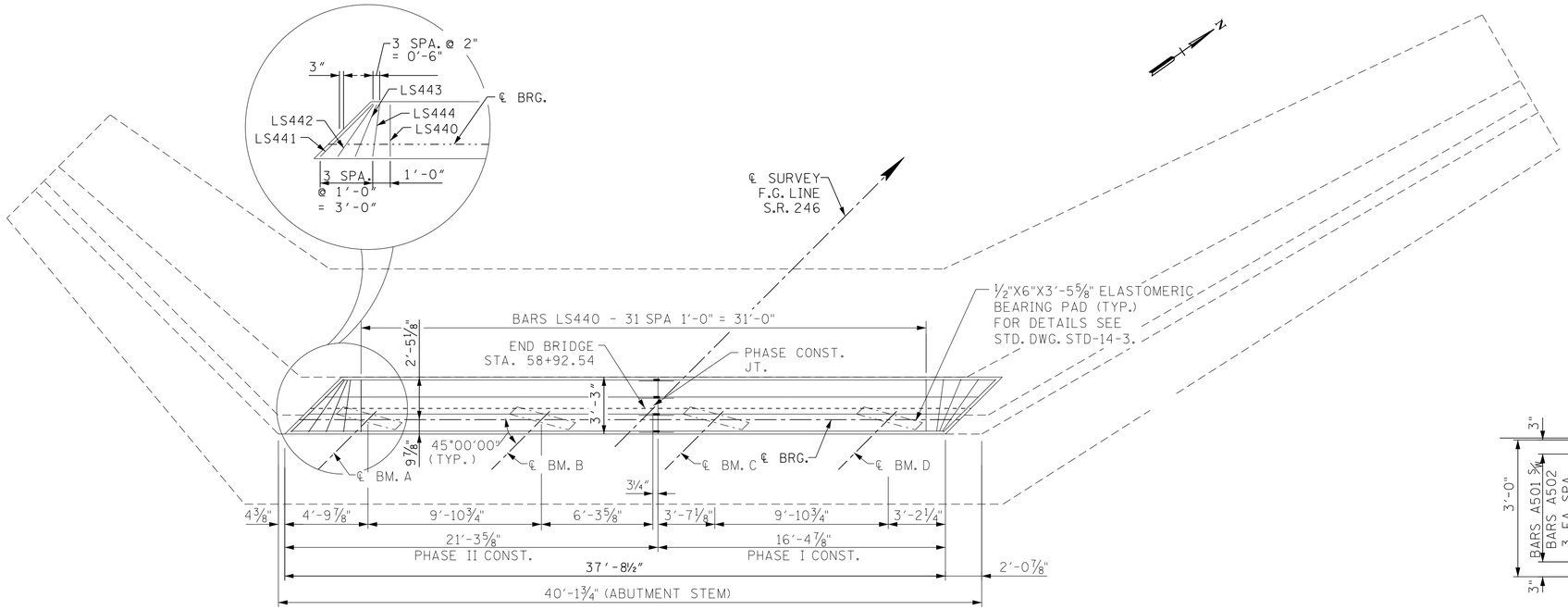

PLAN

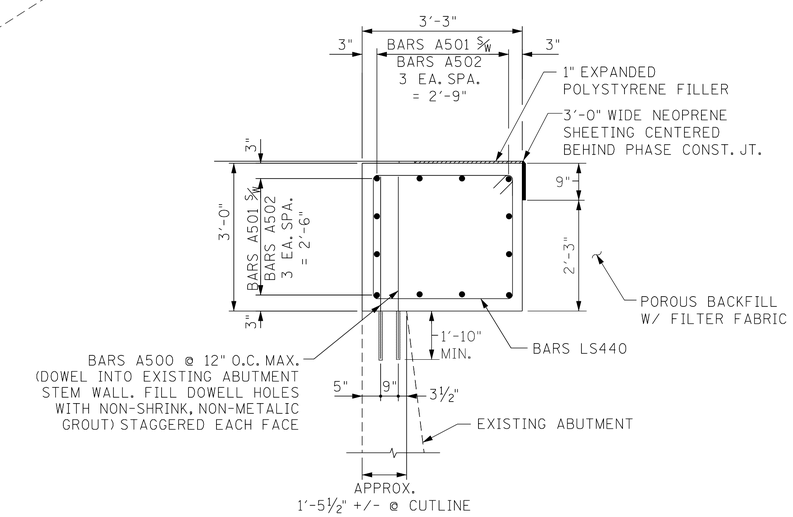

SECTION B-B

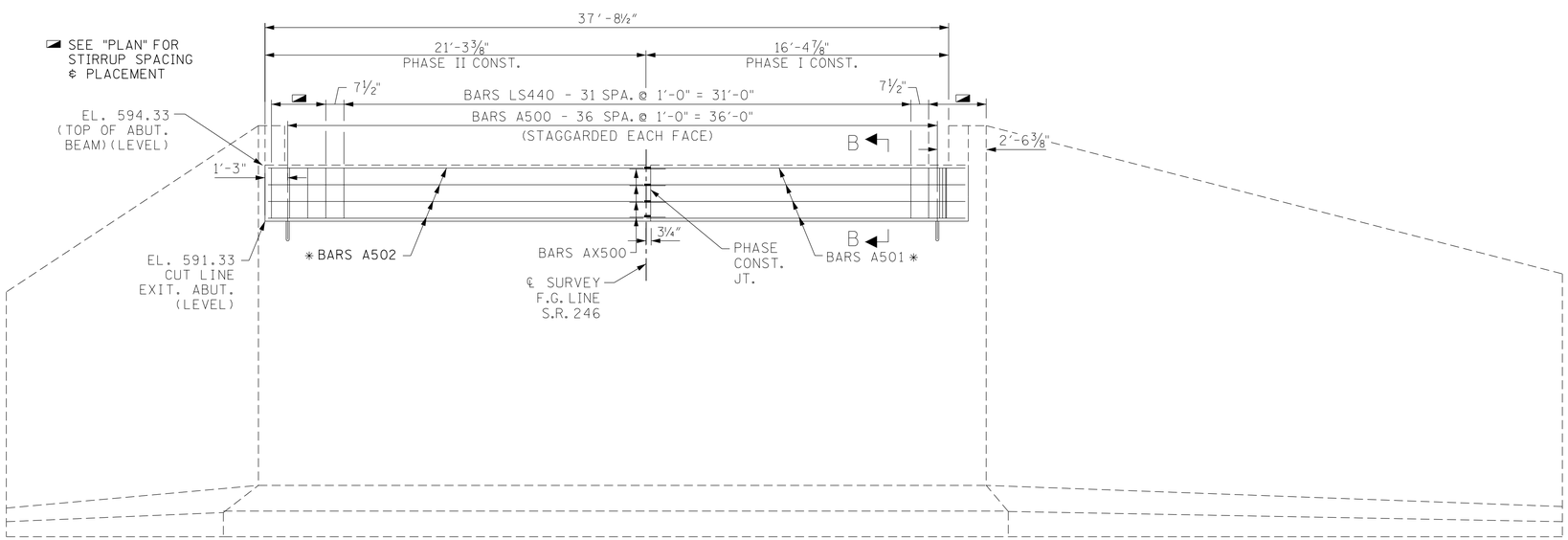

* NOTE: TRIM BARS AS NEEDED TO MAINTAIN MIN. 2" CLEARANCE.

ELEVATION

NOTES:

1. ELASTOMERIC PADS SHALL BE IN PLACE A MINIMUM OF ONE DAY BEFORE BEING DISTURBED BY SETTING BEAMS. PLACE RUBBER BONDING CEMENT IN SUCH A WAY THAT VISIBLE CONCRETE SURFACES WILL NOT BE STAINED.

2. PRIOR TO PLACING NEW CONCRETE AGAINST ANY BROKEN OR SCARIFIED SURFACE, AN APPROVED EPOXY ADHESIVE SHALL BE APPLIED TO THE ROUGHENED CONCRETE.

SPECIAL NOTE FOR ANCHOR BOLTS AT ABUTMENTS:
ANCHOR BOLT ASSEMBLIES AT ABUTMENTS SHALL BE IN ACCORDANCE WITH STANDARD DRAWING STD-6-1 ANCHOR BOLT ASSEMBLIES MAY BE DRILLED AND GROUTED IN ACCORDANCE WITH MANUFACTURER'S RECOMMENDATIONS USING AN APPROVED ANCHORING SYSTEM. BOLT PROJECTION 11". OMIT HOOK ON ANCHOR BOLT, IN THIS CASE.

UNOFFICIAL SET

NOT FOR BIDDING

STATE OF TENNESSEE
DEPARTMENT OF TRANSPORTATION
BRIDGE NO. 1
ABUTMENT NO. 2

STATE ROUTE 246
OVER CARTERS CREEK
AT L.M. 1.07
BR. NO. 60S61810003
MAURY COUNTY
2016

BR-122-95

DESIGNED BY	VOLKERT	DATE	10/2015
DRAWN BY	C. DIXON/D. HOWARD	DATE	10/2015
SUPERVISED BY	J. ECKEL	DATE	9/2016
CHECKED BY	A. DAVIDSON	DATE	9/2016

VOLKERT

21-SEP-2016 23:48
535000 TDOT Bridge Repair\535003.17_SR246_over_MayhornBranch&_CartersCreek\DGN\Bridge\III_CC_Abutment No. 2.dgn

PROJECT NO.	YEAR	SHEET NO.
60015-4204-04	2016	____

REVISIONS

NO.	DATE	BY	BRIEF DESCRIPTION

BARS A

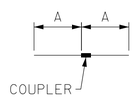

BARS AX

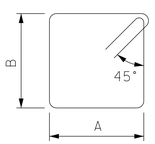

BARS LS

ABUTMENTS 1 & 2
BILL OF STEEL

(PER ABUTMENT)

	BAR	SIZE	LOCATION	NO. REQ'D.	BENDING DIMENSION				LENGTH
					A	B	C	D	
	A500	5	ABUTMENT	37	4'-7"				4'-7"
*	A501	5	ABUTMENT	12	19'-5"				19'-5"
*	A502	5	ABUTMENT	12	20'-11"				20'-11"
	LS440	4	ABUTMENT	32	2'-11"	2'-8"			11'-2"
	LS441	4	ABUTMENT	2	4'-3"	2'-8"			13'-10"
	LS442	4	ABUTMENT	2	3'-7"	2'-8"			12'-6"
	LS443	4	ABUTMENT	2	3'-2½"	2'-8"			11'-9"
	LS444	4	ABUTMENT	2	3'-0"				11'-4"
	AX500	5	ABUTMENT	12	2'-7"				5'-2"

* TRIM AS NEEDED FOR SKEW TO MAINTAIN 2" CLEAR

ESTIMATED QUANTITIES

LOCATION	ITEM NO. 604-10.62 L.F.	CLASS A CONCRETE (BRIDGES) C.Y.	STEEL BAR REINFORCEMENT (BRIDGES) LBS.
ABUT. 1	30	13.6	980
ABUT. 2	-	13.6	980

21-SEP-2016 23:48
535000 TDOT Bridge Repair\535003.17_SR246_over_MayhornBranch&_CartersCreek\DGN\Bridge\12_CC_Abutment Details.dgn

DESIGNED BY	VOLKERT	DATE	10/2015
DRAWN BY	C. DIXON/D. HOWARD	DATE	10/2015
SUPERVISED BY	J. ECKEL	DATE	9/2016
CHECKED BY	A. DAVIDSON	DATE	9/2016

VOLKERT

UNOFFICIAL SET

NOT FOR BIDDING

STATE OF TENNESSEE
DEPARTMENT OF TRANSPORTATION

BRIDGE NO. 1
ABUTMENT DETAILS

STATE ROUTE 246
OVER CARTERS CREEK
AT L.M. 1.07
BR. NO. 60S61810003
MAURY COUNTY
2016

BR-122-96

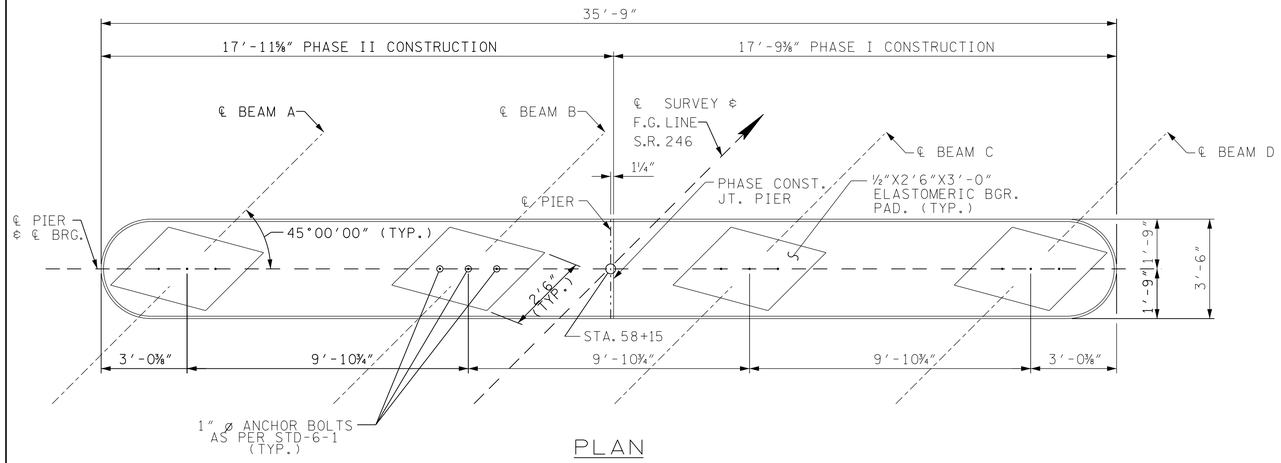

PLAN

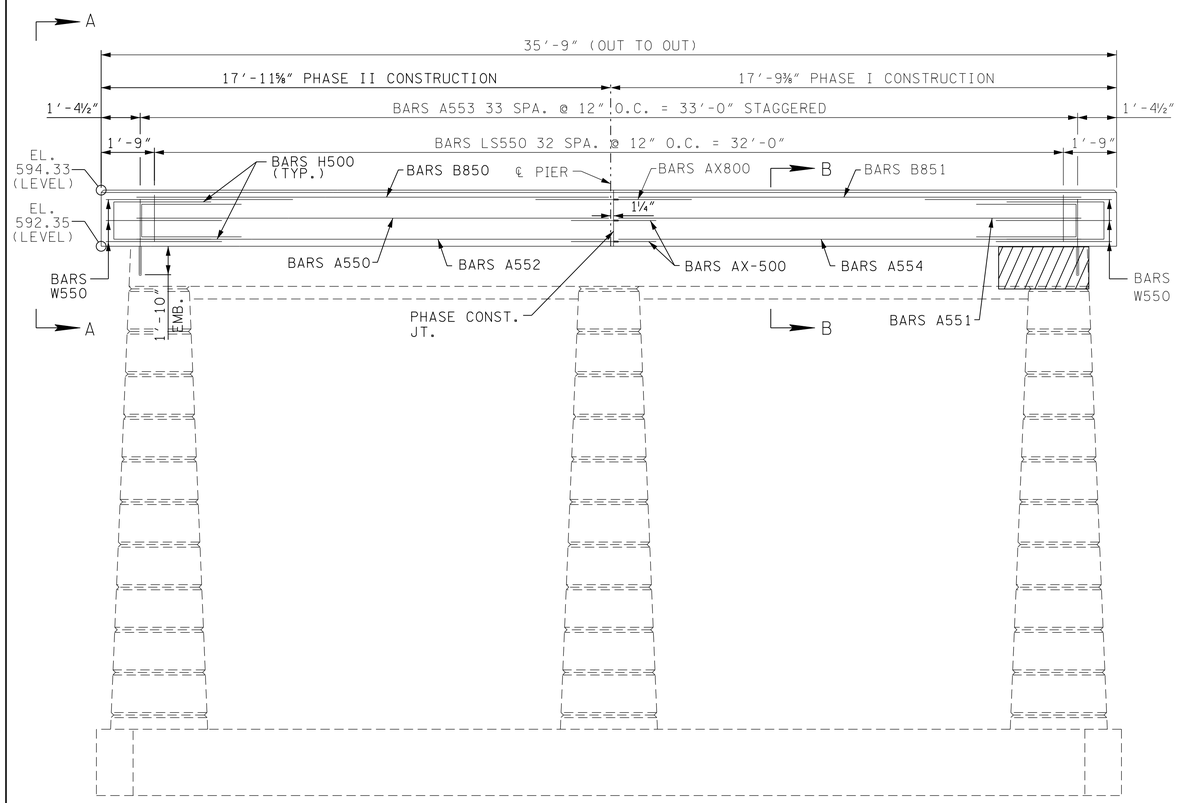

ELEVATION

(LOOKING FORWARD ON SURVEY)

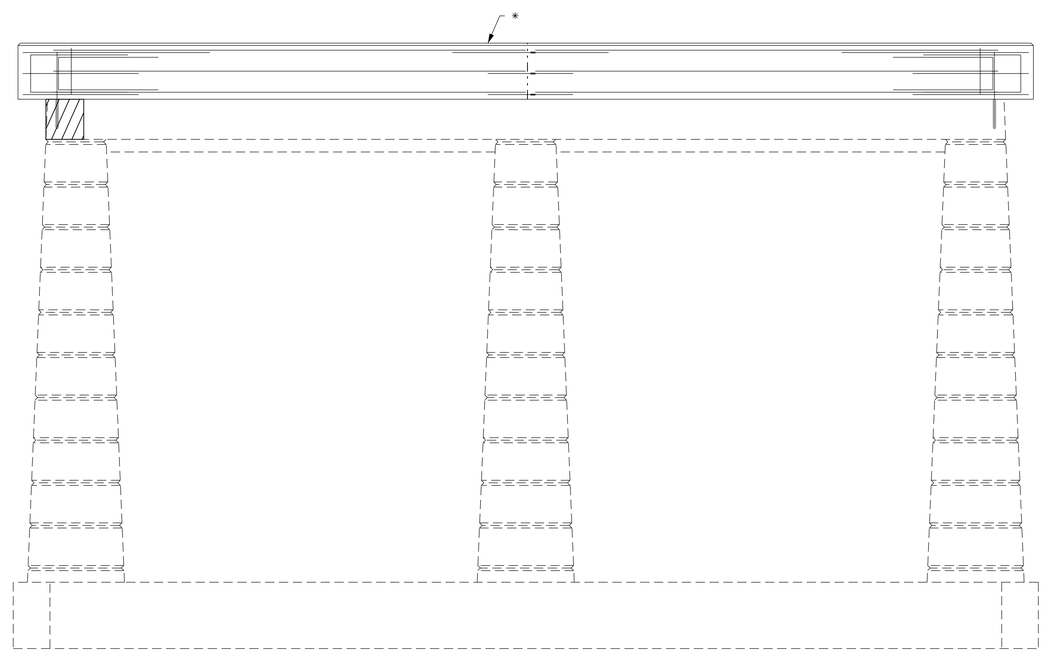

ELEVATION

(LOOKING BACK ON SURVEY)

* SEE FRONT VIEW FOR CAP DETAILS

DENOTES: AREAS OF EXISTING SPALLED CONCRETE TO BE REPAIRED. SEE SPALL REPAIR DETAILS ON DWG. NO. BR-122-107.

NOTES:

1. THE CONTRACTOR SHALL BE RESPONSIBLE FOR THE STABILITY OF THE STRUCTURE DURING REPAIRS.
2. WHEN POURING CAP BEAM, PROVISIONS SHALL BE MADE FOR SETTING ANCHOR BOLTS. SEE STANDARD DRAWING STD-6-1. BOLT PROJECTON 11".
3. ELASTOMERIC PADS SHALL BE IN PLACE A MINIMUM OF ONE DAY BEFORE BEING DISTURBED BY SETTING BEAMS ON CONCRETE. PLACE RUBBER BONDING CEMENT IN SUCH A WAY THAT VISIBLE CONCRETE SURFACES WILL NOT BE STAINED.
4. DOWEL STEEL TO EXTEND 1'-10" INTO CAP BEAM.
5. PRIOR TO PLACING NEW CONCRETE AGAINST ANY BROKEN OR SCARIFIED SURFACE, AN APPROVED EPOXY ADHESIVE SHALL BE APPLIED TO THE ROUGHENED CONCRETE.

SPECIAL NOTE FOR ANCHOR BOLTS AT PIERS:

ANCHOR BOLT ASSEMBLIES AT ABUTMENTS SHALL BE IN ACCORDANCE WITH STANDARD DRAWING STD-6-1 ANCHOR BOLT ASSEMBLIES MAY BE DRILLED AND GROUTED IN ACCORDANCE WITH MANUFACTURER'S RECOMMENDATIONS USING AN APPROVED ANCHORING SYSTEM. BOLT PROJECTION 11". OMIT HOOK ON ANCHOR BOLT, IN THIS CASE.

THE SUPPORT DIAPHRAGMS AT PIERS SHALL BE FORMED AND THE BOTTOM 15 INCHES POURED AS SOON AS POSSIBLE AFTER THE BEAMS HAVE BEEN SET. THE REMAINDER OF THE DIAPHRAGM SHALL BE POURED CONCURRENTLY WITH THE DECK SLAB. THE BEAMS SHALL ATTAIN AN AGE OF AT LEAST 90 DAYS PRIOR TO POURING THE REMAINDER OF THE SUPPORT DIAPHRAGMS AND DECK SLAB. ALL DIAPHRAGM CONCRETE SHALL BE INCLUDED IN THE QUANTITY FOR ITEM NO. 604-03.09.

PROJECT NO.	YEAR	SHEET NO.
60015-4204-04	2016	

REVISIONS

NO.	DATE	BY	BRIEF DESCRIPTION

LOCATION	ITEM NO. 604-10.05 S.F.	ITEM NO. 604-10.54 S.F.
PIER NO.1	5	6

DESIGNED BY	VOLKERT	DATE	10/2015
DRAWN BY	C. DIXON/D. HOWARD	DATE	10/2015
SUPERVISED BY	J. ECKEL	DATE	9/2016
CHECKED BY	A. DAVIDSON	DATE	9/2016

VOLKERT

UNOFFICIAL SET

NOT FOR BIDDING

STATE OF TENNESSEE
DEPARTMENT OF TRANSPORTATION

BRIDGE NO. 1
PIER NO. 1

STATE ROUTE 246
OVER CARTERS CREEK
AT L.M. 1.07
BR. NO. 60S61810003
MAURY COUNTY
2016

BR-122-97

21-SEP-2016 23:49
535000 TDOT Bridge Repair\535003J7_SR246_over_MayhornBranch&_CartersCreek\DGN\Bridge\N3_CC_Bent 1.dgn

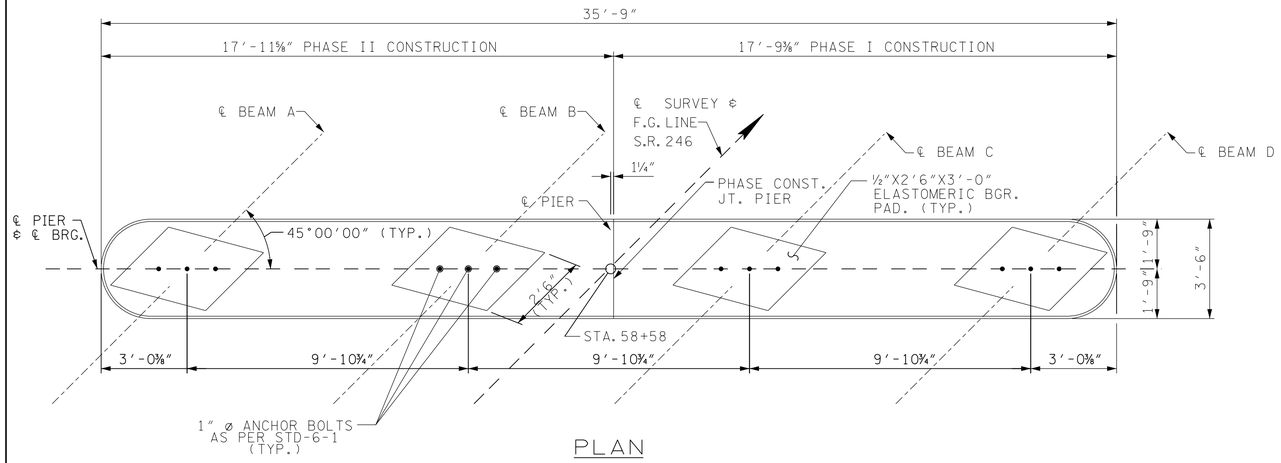

PLAN

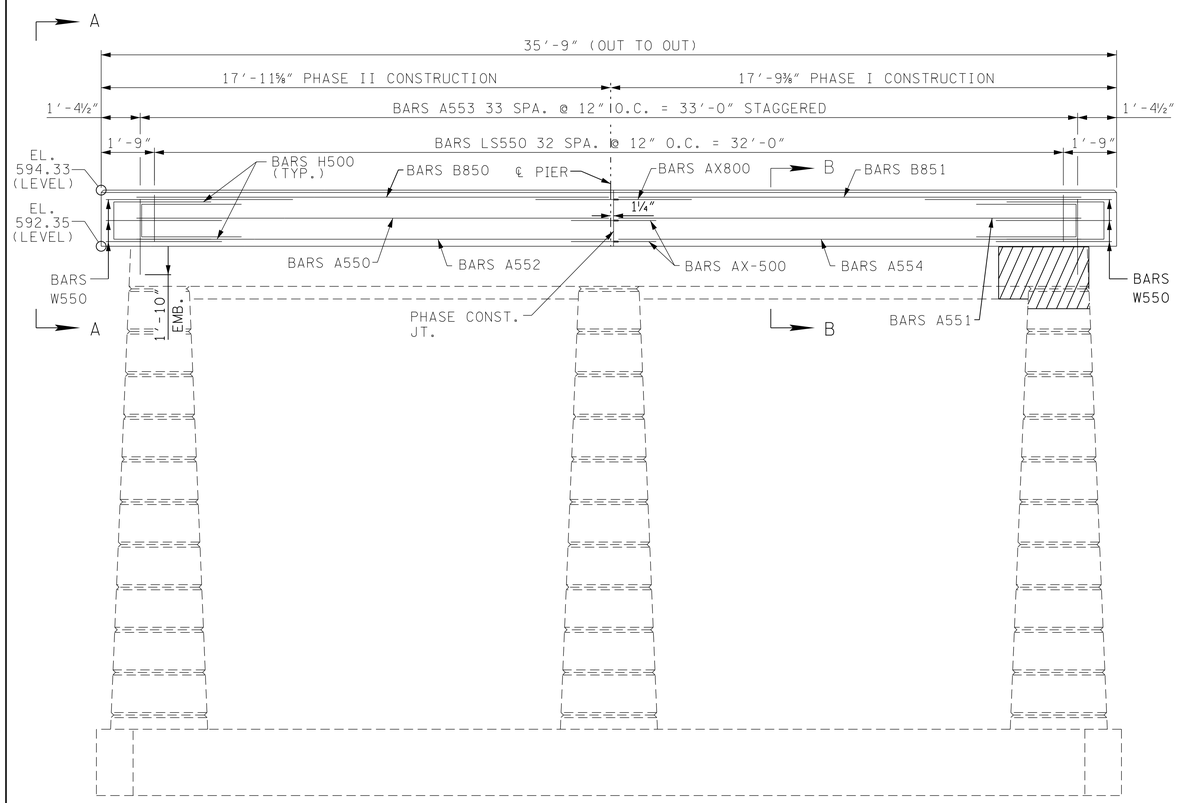

ELEVATION

(LOOKING FORWARD ON SURVEY)

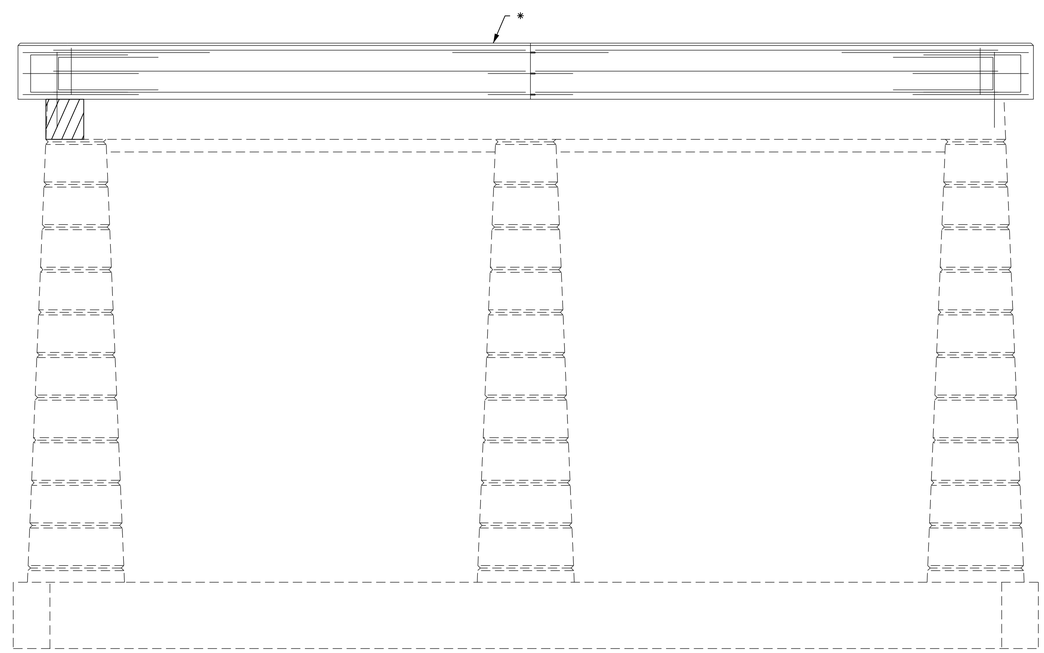

ELEVATION

(LOOKING BACK ON SURVEY)

* SEE FRONT VIEW FOR CAP DETAILS

DENOTES: AREAS OF EXISTING SPALLED CONCRETE TO BE REPAIRED. SEE SPALL REPAIR DETAILS ON DWG. NO. BR-122-107.

NOTES:

1. THE CONTRACTOR SHALL BE RESPONSIBLE FOR THE STABILITY OF THE STRUCTURE DURING REPAIRS.
2. WHEN POURING CAP BEAM, PROVISIONS SHALL BE MADE FOR SETTING ANCHOR BOLTS. SEE STANDARD DRAWING STD-6-1. BOLT PROJECTON 11".
3. ELASTOMERIC PADS SHALL BE IN PLACE A MINIMUM OF ONE DAY BEFORE BEING DISTURBED BY SETTING BEAMS ON CONCRETE. PLACE RUBBER BONDING CEMENT IN SUCH A WAY THAT VISIBLE CONCRETE SURFACES WILL NOT BE STAINED.
4. DOWEL STEEL TO EXTEND 1'-10" INTO CAP BEAM.
5. PRIOR TO PLACING NEW CONCRETE AGAINST ANY BROKEN OR SCARIFIED SURFACE, AN APPROVED EPOXY ADHESIVE SHALL BE APPLIED TO THE ROUGHENED CONCRETE.

SPECIAL NOTE FOR ANCHOR BOLTS AT PIERS:

ANCHOR BOLT ASSEMBLIES AT ABUTMENTS SHALL BE IN ACCORDANCE WITH STANDARD DRAWING STD-6-1 ANCHOR BOLT ASSEMBLIES MAY BE DRILLED AND GROUTED IN ACCORDANCE WITH MANUFACTURER'S RECOMMENDATIONS USING AN APPROVED ANCHORING SYSTEM. BOLT PROJECTION 11". OMIT HOOK ON ANCHOR BOLT, IN THIS CASE.

THE SUPPORT DIAPHRAGMS AT PIERS SHALL BE FORMED AND THE BOTTOM 15 INCHES POURED AS SOON AS POSSIBLE AFTER THE BEAMS HAVE BEEN SET. THE REMAINDER OF THE DIAPHRAGM SHALL BE POURED CONCURRENTLY WITH THE DECK SLAB. THE BEAMS SHALL ATTAIN AN AGE OF AT LEAST 90 DAYS PRIOR TO POURING THE REMAINDER OF THE SUPPORT DIAPHRAGMS AND DECK SLAB. ALL DIAPHRAGM CONCRETE SHALL BE INCLUDED IN THE QUANTITY FOR ITEM NO. 604-03.09.

PROJECT NO.	YEAR	SHEET NO.
60015-4204-04	2016	

REVISIONS

NO.	DATE	BY	BRIEF DESCRIPTION

LOCATION	ITEM NO. 604-10.05 S.F.	ITEM NO. 604-10.54 S.F.
PIER NO.2	6	12

DESIGNED BY VOLKERT DATE 10/2015
DRAWN BY C. DIXON/D. HOWARD DATE 10/2015
SUPERVISED BY J. ECKEL DATE 9/2016
CHECKED BY A. DAVIDSON DATE 9/2016

VOLKERT

UNOFFICIAL SET

NOT FOR BIDDING

STATE OF TENNESSEE
DEPARTMENT OF TRANSPORTATION
BRIDGE NO. 1
PIER NO. 2

STATE ROUTE 246
OVER CARTERS CREEK
AT L.M. 1.07
BR. NO. 60S61810003
MAURY COUNTY
2016

BR-122-98

21-SEP-2016 23:49
535000 TDOT Bridge Repair\535003J7_SR246_over_MayhornBranch&_CartersCreek\DGN\Bridge\13A_CC_Bent 2.dgn

PROJECT NO.	YEAR	SHEET NO.
60015-4204-04	2016	____

REVISIONS

NO.	DATE	BY	BRIEF DESCRIPTION

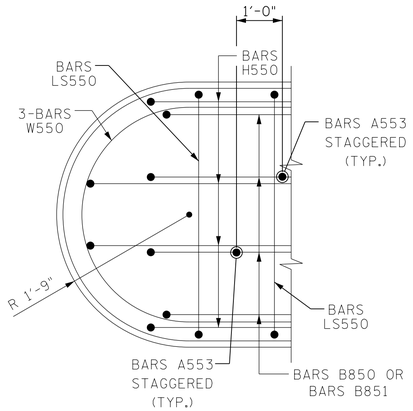

PART PLAN - END OF CAP

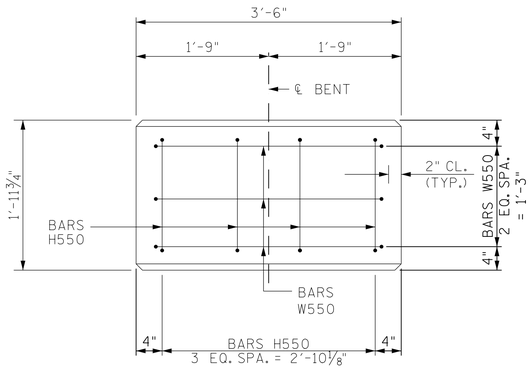

ELEVATION A-A

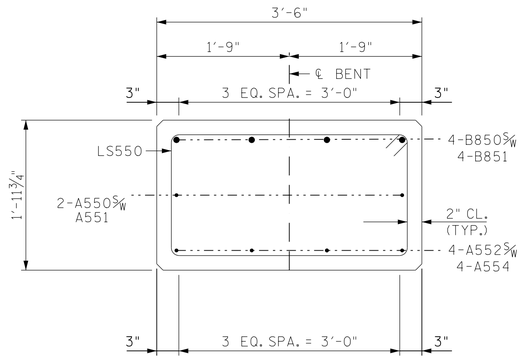

SECTION B-B

BARS A

BARS B

BARS H

BARS LS

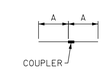

BARS AX

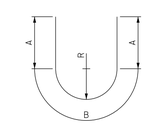

BARS W

PIERS 1 & 2
BILL OF STEEL
(PER PIER)

BAR	SIZE	LOCATION	NO. REQ'D.	BENDING DIMENSION A	B	C	D	LENGTH
A550	5	PIER	2	16'-8"				16'-8"
A551	5	PIER	2	16'-4"				16'-4"
A552	5	PIER	4	16'-8"				16'-8"
A553	5	PIER	34	3'-7"				3'-7"
A554	5	PIER	4	16'-4"				16'-4"
AX800	8	PIER	4	5'-3"				10'-6"
AX500	5	PIER	6	2'-7"				5'-2"
B850	8	PIER	4	16'-8"				17'-7"
B851	8	PIER	4	16'-4"				17'-3"
H500	5	PIER	8	1'-8"	3'-5"			8'-6"
LS550	5	PIER	33	3'-2"	1'-7"			9'-6"
W550	5	PIER	6	2'-4"	4'-11"			9'-7"

ESTIMATED QUANTITIES
(PIERS 1 & 2)

	CLASS "A" CONCRETE (BRIDGES) C.Y.	STEEL BAR REINFORCEMENT (BRIDGES) LB.
PIER 1	9.0	1340
PIER 2	9.0	1340

UNOFFICIAL SET

NOT FOR BIDDING

STATE OF TENNESSEE
DEPARTMENT OF TRANSPORTATION
BRIDGE NO. 1
PIER DETAILS

STATE ROUTE 246
OVER CARTERS CREEK
AT L.M. 1.07
BR. NO. 60S61810003
MAURY COUNTY
2016

BR-122-99

DESIGNED BY VOLKERT DATE 10/2015
DRAWN BY C. DIXON/D. HOWARD DATE 10/2015
SUPERVISED BY J. ECKEL DATE 9/2016
CHECKED BY A. DAVIDSON DATE 9/2016

VOLKERT

21-SEP-2016 23:49
535000 TDOT Bridge Repair\535003.17_SR246_over_MayhornBranch&_CartersCreek\DGN\Bridge\114_CC_Bent Details.dgn

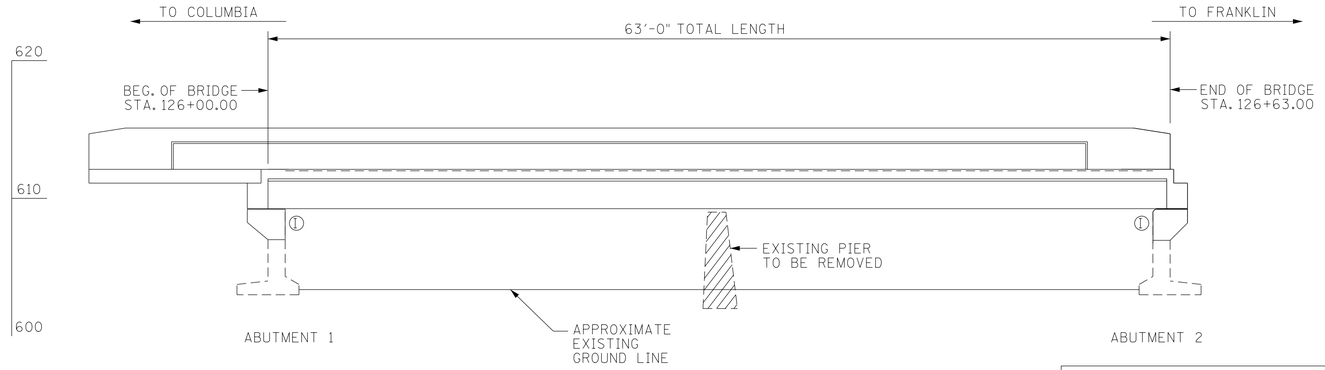

ELEVATION

Ⓘ DENOTES: INTEGRAL

NOTE: ALL DIMENSIONS AND VERTICAL ELEVATIONS ARE BASED ON EXISTING PLAN INFORMATION AND FIELD MEASUREMENTS. PRIOR TO CONSTRUCTION, IT IS THE RESPONSIBILITY OF THE CONTRACTOR TO FIELD VERIFY ALL DIMENSIONS.

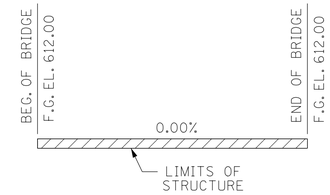

GRADE SKETCH

PROJECT NO.	YEAR	SHEET NO.
60015-4204-04	2016	

REVISIONS

NO.	DATE	BY	BRIEF DESCRIPTION

SCOPE OF WORK

1. PROVIDE REQUIRED TRAFFIC CONTROL TO MAINTAIN AT LEAST ONE 9'-0" LANE OF TRAFFIC AT ALL TIMES.
2. PROVIDE SPALL REPAIRS WITH HIGH EARLY STRENGTH CONCRETE AND POLYMER MODIFIED CEMENTITIOUS MATERIAL TO ABUTMENTS.
3. EPOXY INJECT CRACKED CONCRETE AT ABUTMENTS.
4. REMOVE EXISTING ASPHALT OVERLAY FOR THE ENTIRE LENGTH OF BRIDGE AND APPROPRIATE TRANSITION LENGTH BEYOND EACH END OF BRIDGE.
5. REMOVE THE SUPERSTRUCTURE IN PHASES AND REPLACE WITH PRECAST, PRESTRESSED CONCRETE GIRDER SUPERSTRUCTURE WITH A CAST-IN-PLACE DECK.
6. CONSTRUCT APPROACH SLAB AT ABUTMENT NO. 1 AND EXTEND NEW PARAPET ON APPROACH SLAB.
7. WIDEN APPROACH ROADWAY AS NEEDED TO ACCOMMODATE WIDENING.
8. CONSTRUCT 1'-0" (MIN.) VERTICAL EXTENSION OF WINGWALLS.
9. PROVIDE TEXTURE COATING FOR NEW PARAPETS, OUTSIDE BEAMS, AND BOTTOM SIDE OF DECK IN OVERHANG AS WELL AS EXPOSED FACES OF EXISTING ABUTMENTS.
10. INSTALL NEW GUARDRAIL AT BRIDGE ENDS.
11. PROVIDE NEW ASPHALT TRANSITIONS TO EXISTING ASPHALT.
12. CONSTRUCT CURVED CONCRETE PARAPET AS SHOWN IN THE PLANS.

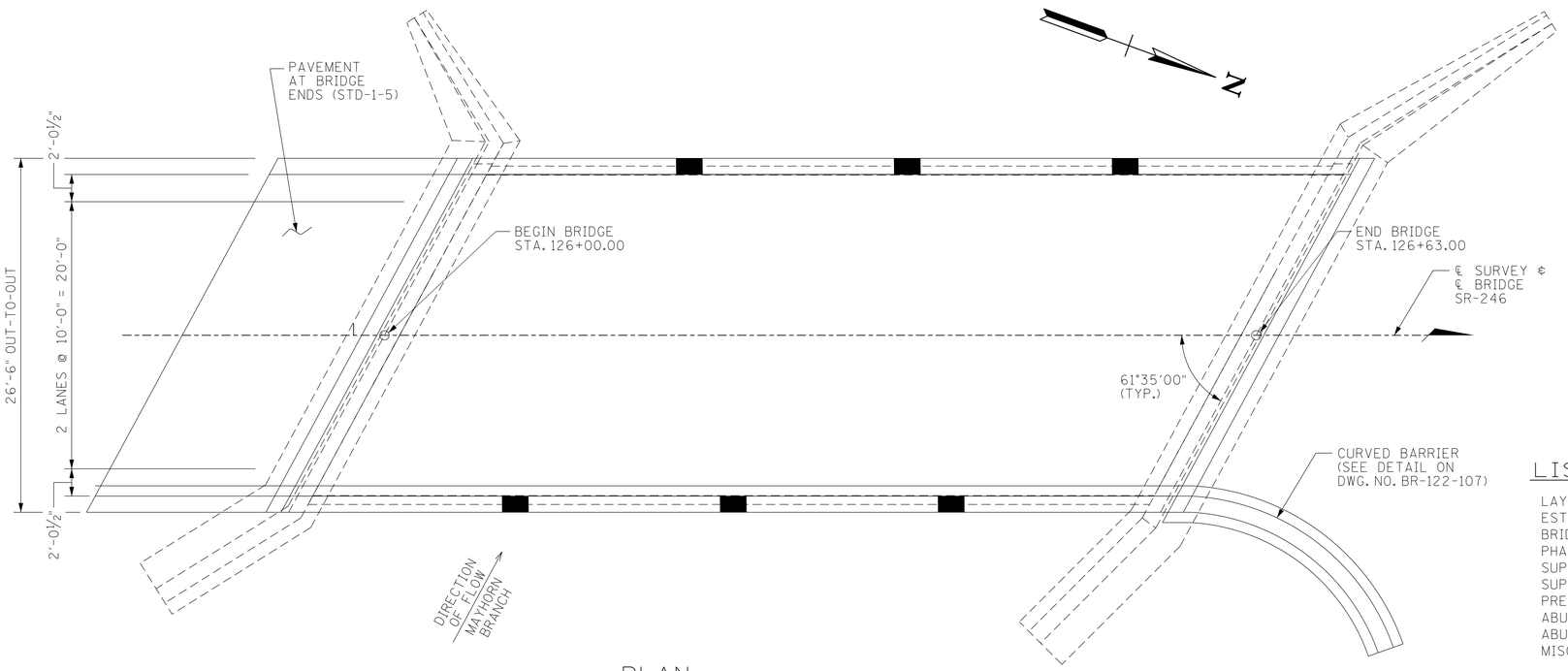

PLAN

DENOTES: PARAPET TYPE DECK DRAIN (SEE STD. DWG.NO. STD-1-1-2SS)

DECK DRAIN LOCATIONS	
LEFT	RIGHT
126+22.27	126+09.23
126+38.02	126+24.98
126+53.77	126+40.73

LIST OF BRIDGE DRAWINGS

	DWG. NO.	LAST REV. DATE
LAYOUT OF BRIDGE TO BE REPAIRED	BR-122-100	
ESTIMATED BRIDGE QUANTITIES	BR-122-85	
BRIDGE GENERAL NOTES	BR-122-86	
PHASING PLAN	BR-122-101	
SUPERSTRUCTURE	BR-122-102	
SUPERSTRUCTURE DETAILS	BR-122-103	
PRESTRESSED BOX BEAM DETAILS	BR-122-104	
ABUTMENT NO. 1	BR-122-105	
ABUTMENT NO. 2	BR-122-106	
MISCELLANEOUS REPAIR DETAILS	BR-122-107	

LIST OF BRIDGE STANDARD DRAWINGS

	DWG. NO.	LAST REV. DATE
BRIDGE RAILING SINGLE SLOPE CONCRETE PARAPET	STD-1-1SS	5-1-14
SLIDER PLATES FOR SINGLE SLOPE PARAPETS AND DECK DRAINS	STD-1-2SS	
REINFORCED CONCRETE PAVEMENT AT BRIDGE ENDS	STD-1-5	3-26-14
BRIDGE MOUNTED INTERCONNECTED PORTABLE BARRIER RAIL	STD-2-1	11-1-10
STD. PRECAST PRESTRESSED BRIDGE DECK PANELS GENERAL DETAILS	STD-4-1	4-8-05
STD. PRECAST PRESTRESSED BRIDGE DECK PANELS DESIGN CRITERIA	STD-4-2	4-8-05
STD. PRECAST PRESTRESSED BRIDGE DECK PANELS GENERAL DETAILS	STD-4-3	3-2-02
STD. PRECAST PRESTRESSED BRIDGE DECK PANELS CONSTRUCTION DETAILS	STD-4-4	6-10-96
REINFORCING BAR SUPPORT DETAILS FOR CONCRETE SLABS	STD-9-1	10-7-08
STD. DETAILS FOR PRESTRESSED BOX BEAMS	STD-14-3	10-15-08

LIST OF REFERENCE DRAWINGS

(TO BE PRINTED WITH PLANS)

	DWG. NO.
EXISTING BRIDGE PLANS	F-13-36 THRU F-13-38

LIST OF SPECIAL PROVISIONS

NO.	LAST REV. DATE	REGARDING
604CR	02-19-96	REPAIR OF BRIDGE DECK CRACKS

STATE ROUTE 246 2014 EST. ADT = 2,570
POSTED SPEED LIMIT = 40 M.P.H.

UNOFFICIAL SET

NOT FOR BIDDING

STATE OF TENNESSEE
DEPARTMENT OF TRANSPORTATION
BRIDGE NO. 2
LAYOUT OF BRIDGE
TO BE REPAIRED
STATE ROUTE 246
OVER MAYHORN BRANCH
AT L.M. 2.34
BR. NO. 60S61810005
MAURY COUNTY
2016

BR-122-100

DESIGNED BY	VOLKERT	DATE	7/2015
DRAWN BY	C. DIXON/D. HOWARD	DATE	7/2015
SUPERVISED BY	J. ECKEL	DATE	9/2016
CHECKED BY	A. DAVIDSON	DATE	9/2016

VOLKERT

21-SEP-2016 23:48
535000 TDOT Bridge Repair\535003.17_SR246_over_MayhornBranch&_CarterscCreek\DGN\Bridge\115_MB_Layout.dgn

PROJECT NO.	YEAR	SHEET NO.
60015-4204-04	2016	____

REVISIONS

NO.	DATE	BY	BRIEF DESCRIPTION

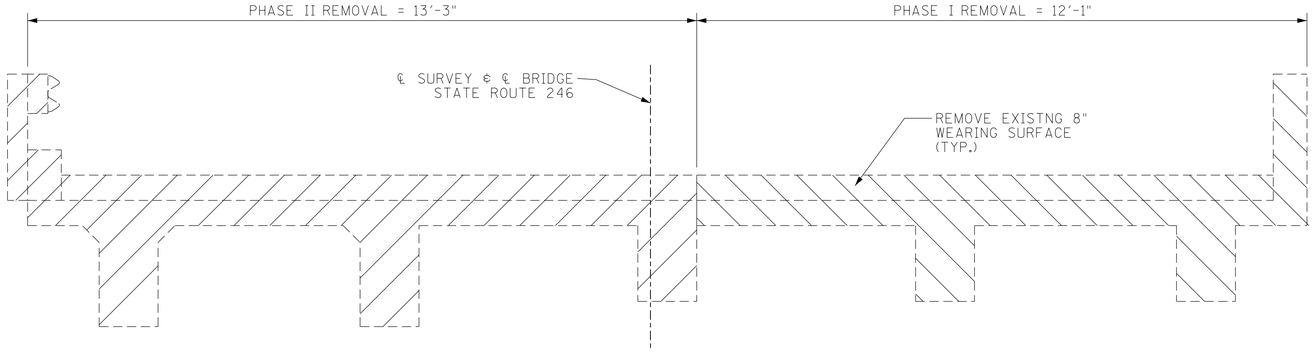

DEMOLITION PLAN

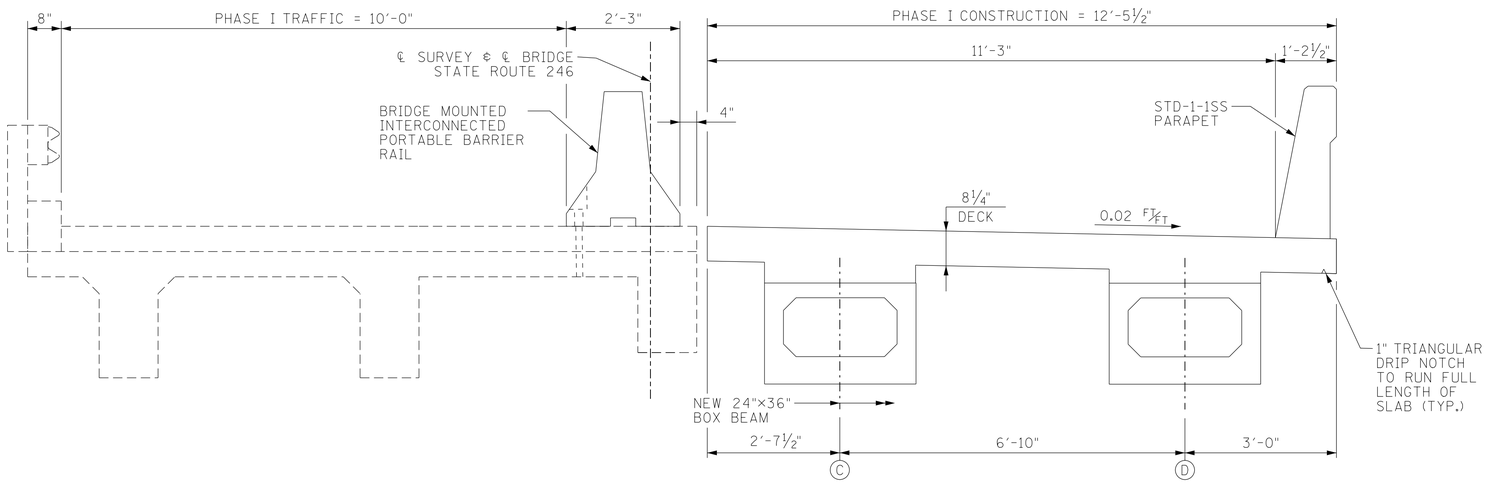

TYPICAL SECTION - PHASE I CONSTRUCTION

(LOOKING FORWARD ON SURVEY)

● NOTE:
ANCHOR BOLTS FOR BRIDGE MOUNTED INTERCONNECTED PORTABLE BARRIER RAIL SHALL BE GROUTED INTO PLACE. ALL COSTS ASSOCIATED WITH GROUTING REMOVAL AT THE COMPLETION OF THE WORK AND PATCHING OF THE DECK IN THESE AREAS SHALL BE INCLUDED IN THE COST OF THE RAIL.

●● NOTE:
CONTRACTOR TO SEAL LONGITUDINAL DECK JOINT WITH HMWM CRACK SEALANT.

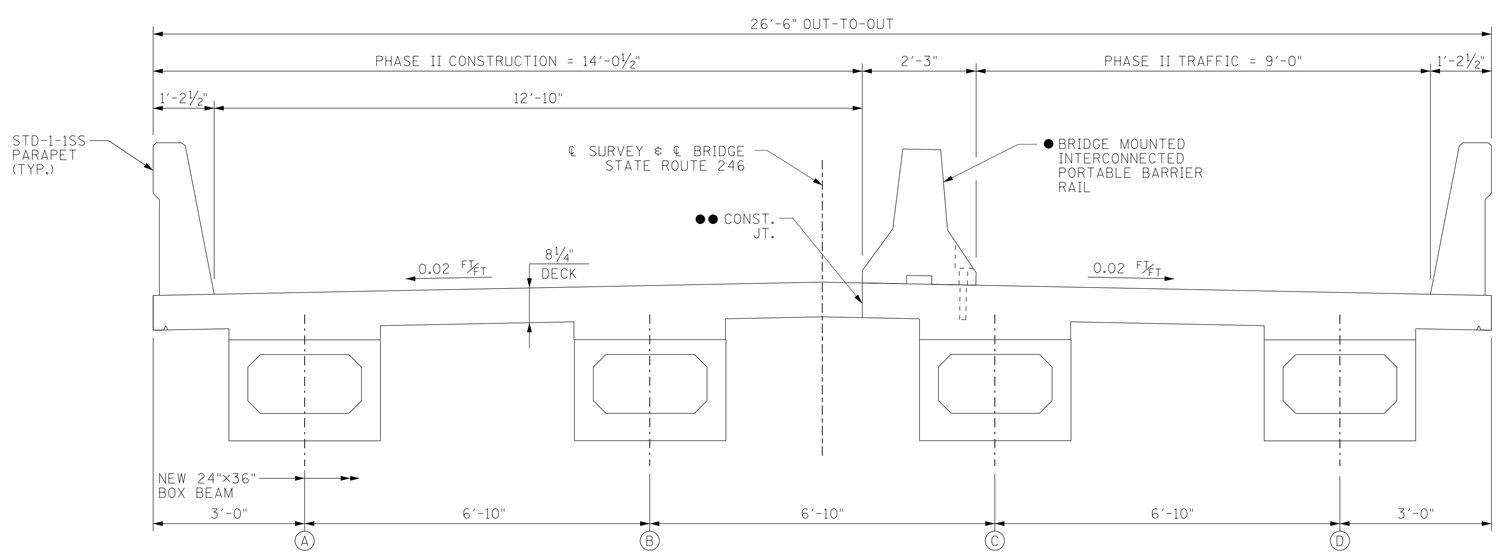

TYPICAL SECTION - PHASE II CONSTRUCTION

(LOOKING FORWARD ON SURVEY)

DESIGNED BY	VOLKERT	DATE	7/2015
DRAWN BY	C. DIXON/D. HOWARD	DATE	7/2015
SUPERVISED BY	J. ECKEL	DATE	9/2016
CHECKED BY	A. DAVIDSON	DATE	9/2016

VOLKERT

UNOFFICIAL SET

NOT FOR BIDDING

STATE OF TENNESSEE
DEPARTMENT OF TRANSPORTATION

BRIDGE NO. 2
PHASING PLAN

STATE ROUTE 246
OVER MAYHORN BRANCH
AT L.M. 2.34
BR. NO. 60S61810005
MAURY COUNTY
2016

BR-122-101

21-SEP-2016 23:48
535000 TDOT Bridge Repair\535003.17_SR246_over_MayhornBranch&_CartersCreek\DGN\Bridge\16_MB_Phasing Plan.dgn

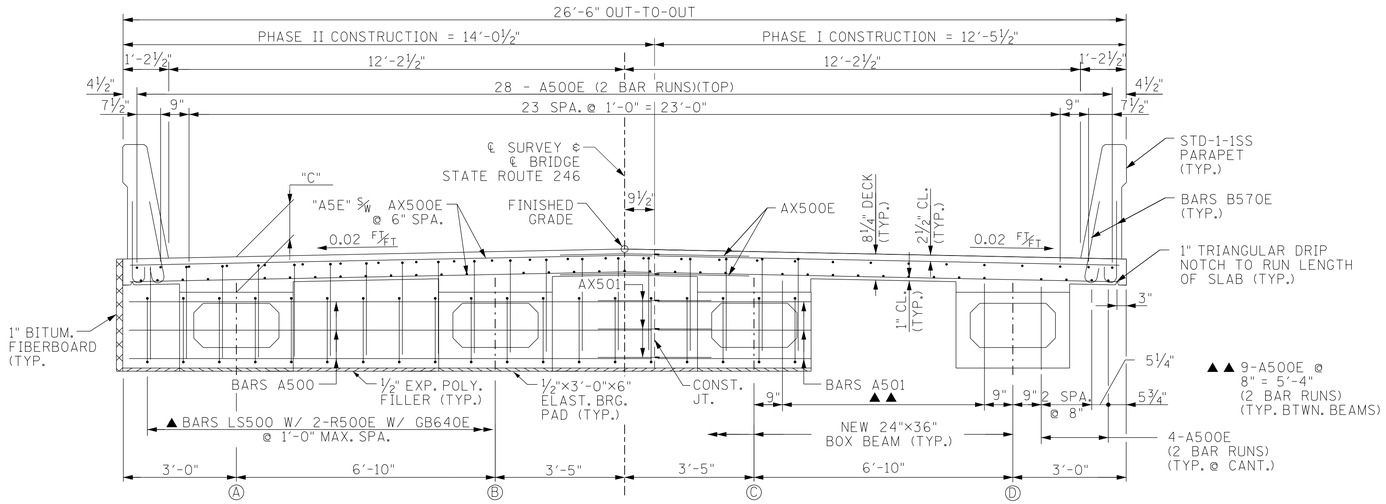

TYPICAL AT ABUTMENT

TYPICAL AT MID-SPAN

TYPICAL CROSS SECTION

(LOOKING FORWARD ON SURVEY)

▲ OMIT BARS GB640E AT ABUTMENT 2

"C"	
BEAM	*DEPTH
A	11¼"
B	12⅞"
C	12⅞"
D	11¼"

*AT ℄ BEARING. VARIES IN SPAN TO COMPENSATE FOR VARIATIONS IN BEAM CAMBER

NOTES:

1. WHEN POURING SLAB, PROVISIONS SHALL BE MADE FOR SETTING REINFORCING STEEL FOR PARAPET. THE PARAPET SHALL NOT BE POURED UNTIL THE SLAB IS POURED AND CURED.
2. ALL COST TO FURNISH AND INSTALL ALL SLAB STEEL SHALL BE PAID FOR UNDER ITEM NO. 604-02.03, EPOXY COATED REINFORCING STEEL (LB.).
3. THE CONTRACTOR IS SOLELY RESPONSIBLE FOR SUPPORTING THE BEAMS TO PREVENT DAMAGE DUE TO TWISTING OR OVERTURNING DURING ALL PHASES OF CONSTRUCTION. IT IS STRONGLY RECOMMENDED THAT THE TEMPORARY ERECTION DIAPHRAGMS BE INSTALLED PRIOR TO PLACING ANY LOADS ON THE BEAMS. HOWEVER, TEMPORARY ERECTION DIAPHRAGMS MUST BE IN PLACE IN THE SPAN AT THE TIME THE SLAB IS POURED IN SAID SPAN.
4. FOR SLAB CONSTRUCTION JOINT DETAIL AND COUPLER BAR DETAIL, SEE DWG. NO. BR-122-107.
5. FOR END POST MODIFICATION DETAIL, SEE DWG. NO. BR-122-107.

PROJECT NO.	YEAR	SHEET NO.
60015-4204-04	2016	____

REVISIONS

NO.	DATE	BY	BRIEF DESCRIPTION

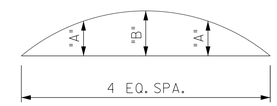

DL CORRECTION		
BEAM	"A"	"B"
A	1 3/16"	1¾"
B	1⅜"	1 15/16"
C	1⅜"	1 15/16"
D	1 3/16"	1¾"

DEAD LOAD CORRECTION CURVE

DEAD LOAD CORRECTION CURVE: THIS CURVE IS FOR DEAD LOAD SLAB AND ALL DEAD LOADS THAT ARE APPLIED AFTER SLAB IS IN PLACE.

NOTE: IF PRESTRESSED DECK PANELS ARE USED AND THE BEAMS ARE PROFILED AFTER PANELS ARE IN PLACE, REDUCE THE DEAD LOAD CORRECTION VALUES BY 25%.

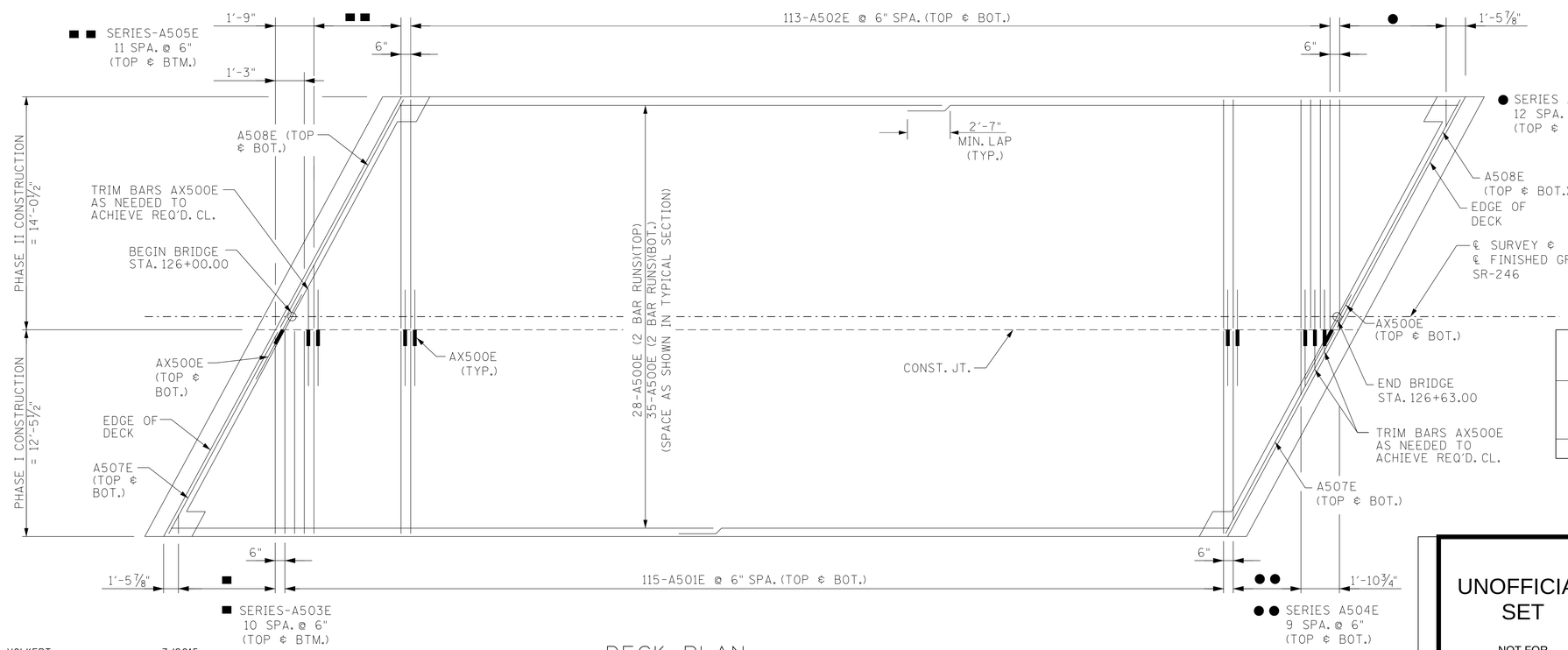

DECK PLAN

ESTIMATED QUANTITIES (SUPERSTRUCTURE)		
CLASS "D" CONCRETE (BRIDGES DECK) C.Y.	EPOXY COATED REINFORCING STEEL LB.	STEEL BAR REINFORCEMENT (BRIDGES) LB.
60	15,117	909

STATE OF TENNESSEE
DEPARTMENT OF TRANSPORTATION

BRIDGE NO. 2
SUPERSTRUCTURE

STATE ROUTE 246
OVER MAYHORN BRANCH
AT L.M. 2.34
BR. NO. 60S61810005
MAURY COUNTY
2016

UNOFFICIAL SET

NOT FOR BIDDING

DESIGNED BY	VOLKERT	DATE	7/2015
DRAWN BY	C. DIXON/D. HOWARD	DATE	7/2015
SUPERVISED BY	J. ECKEL	DATE	9/2016
CHECKED BY	A. DAVIDSON	DATE	9/2016

VOLKERT

BR-122-102

21-SEP-2016 23:49
535000 TDOT Bridge Repair\535003.17_SR246_over_MayhornBranch&_CartersCreek\DGN\Bridge\117_MB_Superstructure.dgn

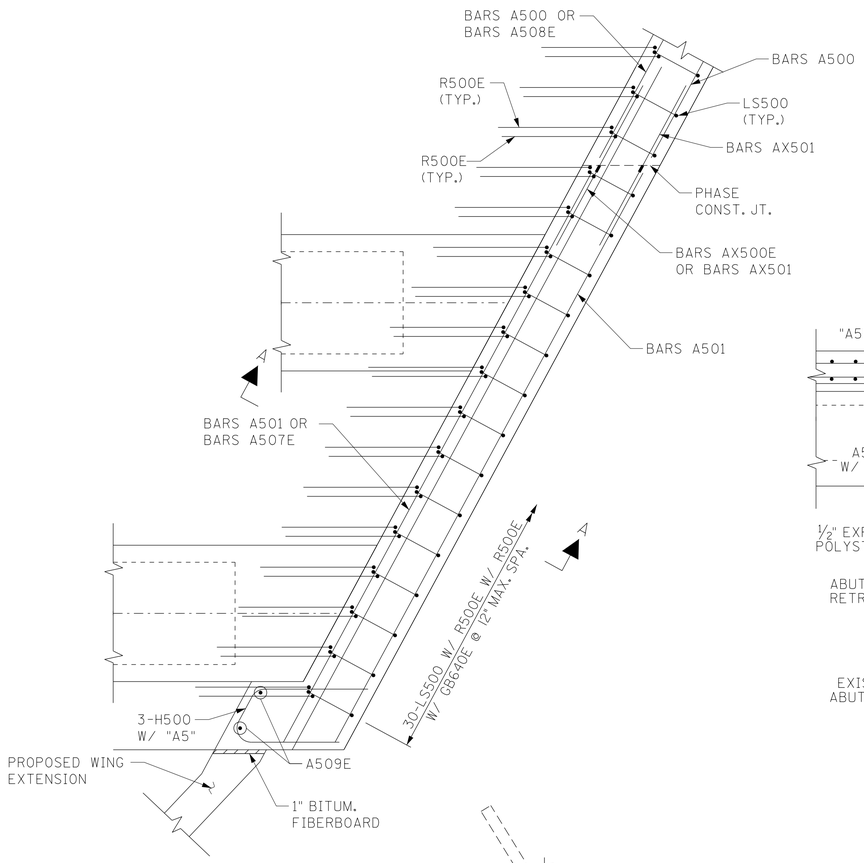

DETAIL "A"

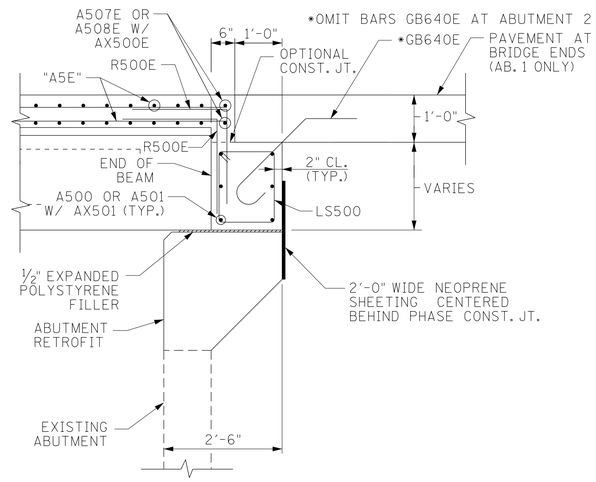

SECTION A-A

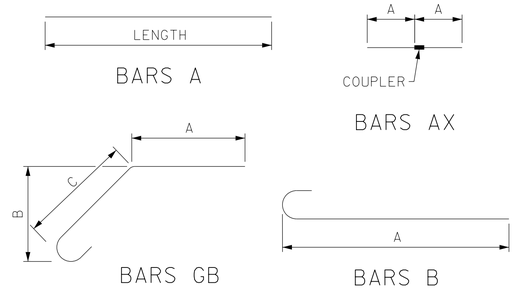

PROJECT NO.	YEAR	SHEET NO.
60015-4204-04	2016	

REVISIONS

NO.	DATE	BY	BRIEF DESCRIPTION

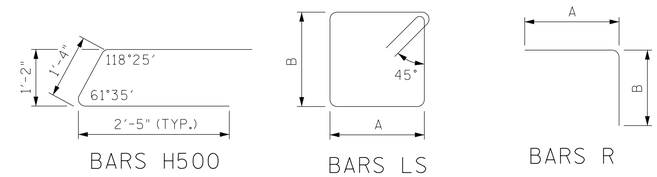

SUPERSTRUCTURE BILL OF STEEL

BAR	SIZE	NO REQ'D.	BENDING DIMENSION A	B	C	D	LENGTH
A500E	5	126	33'-3"				33'-3"
A501E	5	230	12'-3"				12'-3"
A502E	5	226	13'-10"				13'-10"
SER. A503E	5	2	*				76'-1"
			*DIM. A VARIES FROM 2'-4" TO 11'-6" IN INC. OF 11" (11 BARS)				
SER. A504E	5	2	*				72'-11"
			*DIM. A VARIES FROM 3'-2" TO 11'-5" IN INC. OF 11" (10 BARS)				
SER. A505E	5	2	*				95'-6"
			*DIM. A VARIES FROM 2'-11" TO 13'-0" IN INC. OF 11" (12 BARS)				
SER. A506E	5	2	*				101'-10"
			*DIM. A VARIES FROM 2'-4" TO 13'-4" IN INC. OF 11" (13 BARS)				
A507E	5	4	13'-11"				13'-11"
A508E	5	4	15'-8"				15'-8"
A509E	5	8	2'-8"				2'-8"
AX500E	5	254	2'-7"				5'-2"
A500	5	12	15'-8"				15'-8"
A501	5	12	13'-11"				13'-11"
AX501	5	12	2'-5"				4'-10"
GB640E	6	30	1'-1"	1'-9 3/4"	2'-2 1/2"		4'-0"
H500	5	12	1'-4"	2'-5"			6'-2"
LS500	5	60	1'-2"	1'-7"			6'-5"
R500E	5	120	2'-0"	2'-0"			4'-0"
B570E	5	586	2'-1"				2'-8"

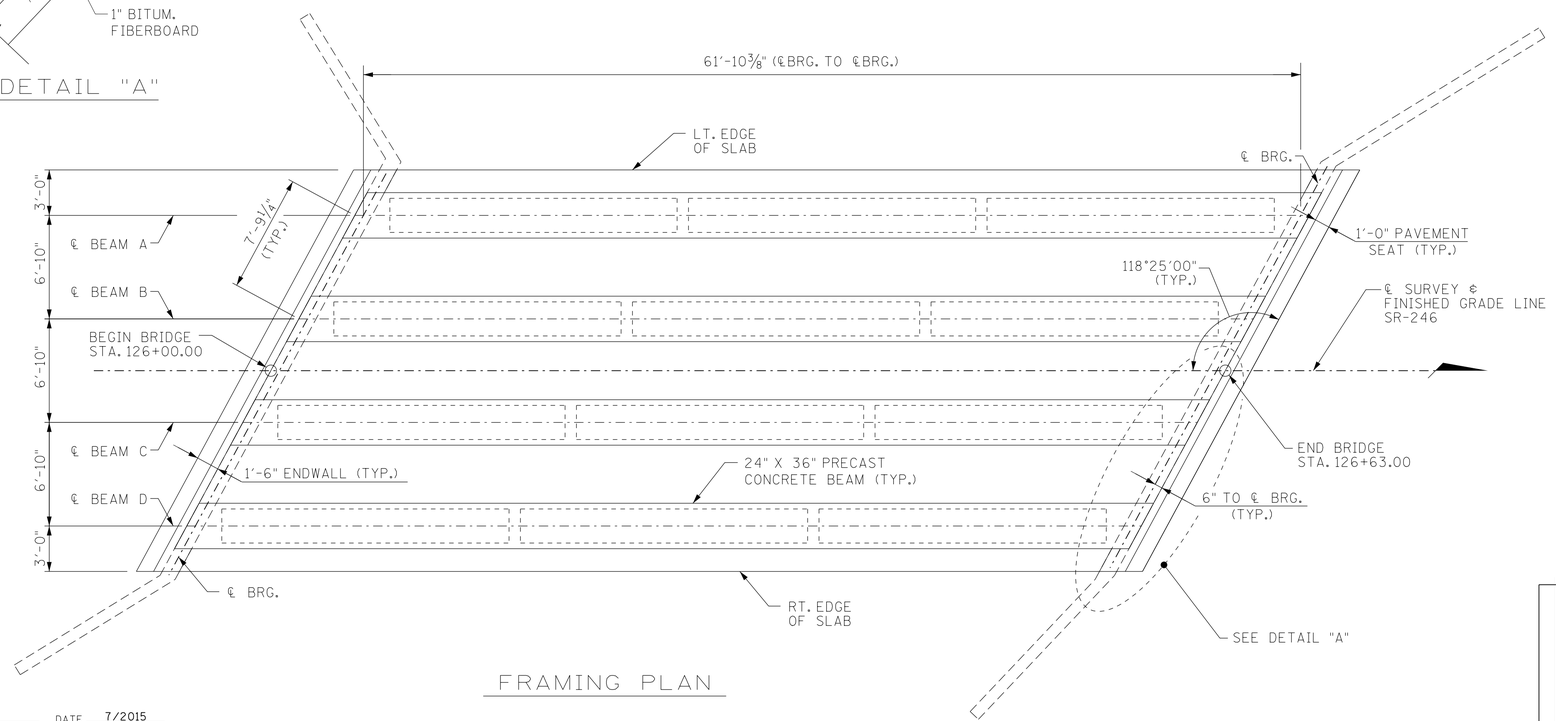

FRAMING PLAN

UNOFFICIAL SET

NOT FOR BIDDING

STATE OF TENNESSEE
DEPARTMENT OF TRANSPORTATION
BRIDGE NO. 2
SUPERSTRUCTURE
DETAILS
STATE ROUTE 246
OVER MAYHORN BRANCH
AT L.M. 2.34
BR. NO. 60S61810005
MAURY COUNTY
2016

BR-122-103

DESIGNED BY VOLKERT DATE 7/2015
DRAWN BY C. DIXON/D. HOWARD DATE 7/2015
SUPERVISED BY J. ECKEL DATE 9/2016
CHECKED BY A. DAVIDSON DATE 9/2016

VOLKERT

21-SEP-2016 23:49
535000 TDOT Bridge Repair\535003.17_SR246_over_MayhornBranch&_CartersCreek\DGN\Bridge\118_MB_Super_Details (1).dgn

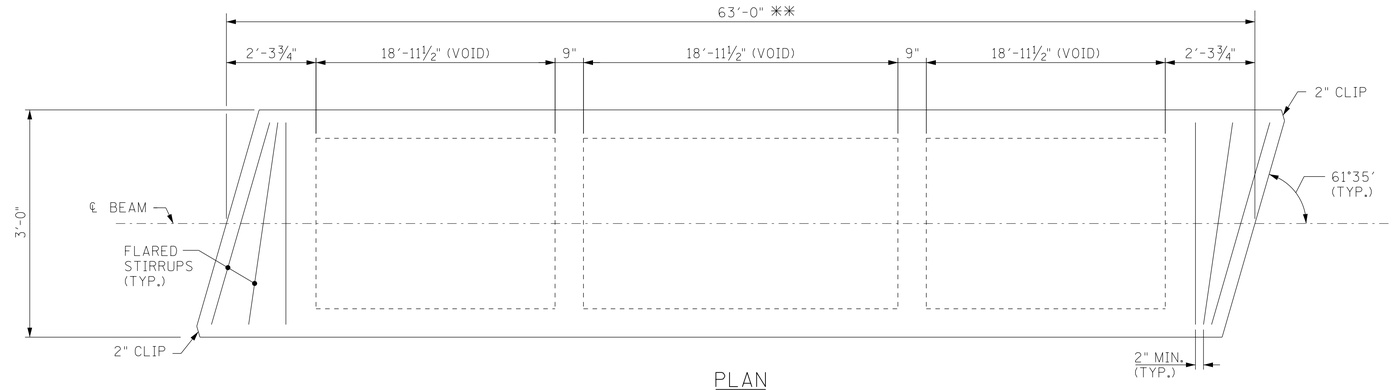

PLAN
(SHOWING PROPERTIES)

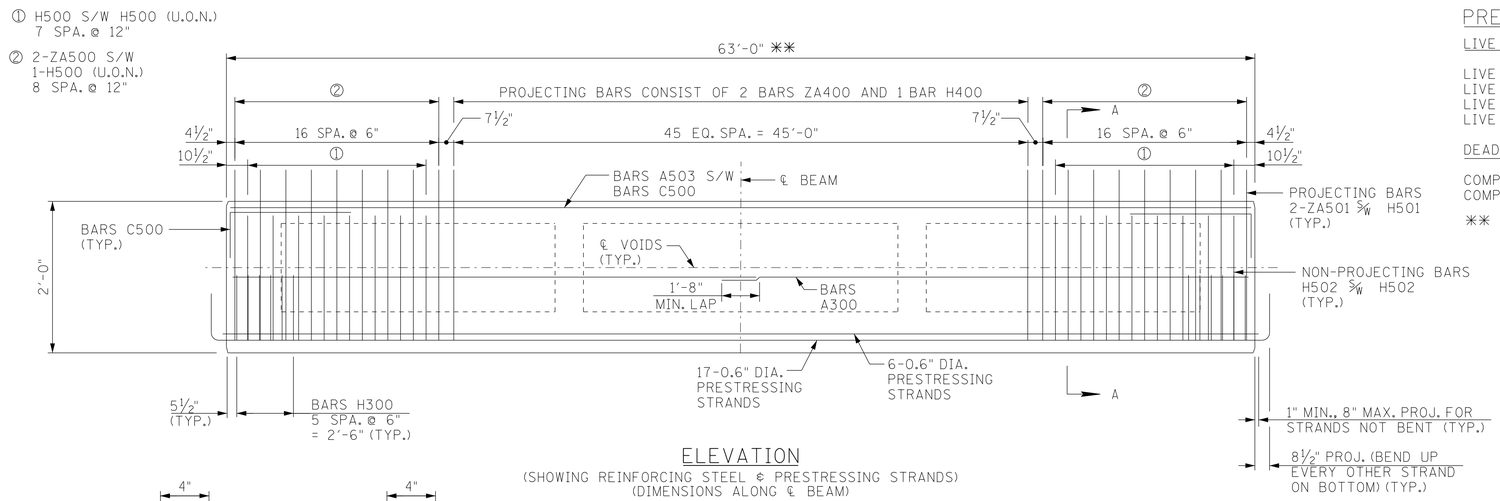

ELEVATION
(SHOWING REINFORCING STEEL & PRESTRESSING STRANDS)
(DIMENSIONS ALONG ℄ BEAM)

NOTES:

1) THE CONCRETE FOR THIS CONSTRUCTION SHALL BE OF SUCH PROPERTIES AS TO ATTAIN A COMPRESSIVE STRENGTH OF NOT LESS THAN 7,000 PSI AT THE AGE OF 28 DAYS AND STRESS TRANSFER SHALL NOT BE MADE TO THE BRIDGE MEMBER UNTIL THE TEST SPECIMENS INDICATE THAT THE CONCRETE HAS REACHED A COMPRESSIVE STRENGTH OF AT LEAST 5,800 PSI. SEE GENERAL NOTES FOR CONCRETE FINISHING NOTE.

2) SEE STD-14-3 FOR BOX BEAM STANDARD DETAILS, NOTES AND REINFORCING.

3) ALL PRESTRESSING STRANDS SHALL BE 0.6" DIAMETER ASTM 270K, 7-WIRE UNCOATED LOW RELAXATION PRESTRESSING STRANDS.

4) AN INITIAL FORCE OF 43,943 LB. SHALL BE APPLIED TO EACH STRAND IN ALL BEAMS UNLESS OTHERWISE NOTED.

5) THE PRESTRESSED BEAMS SHALL ATTAIN AN AGE OF AT LEAST 90 DAYS PRIOR TO POURING ENDWALLS AND DECK SLAB.

PROJECT NO.	YEAR	SHEET NO.
60015-4204-04	2016	____

REVISIONS

NO.	DATE	BY	BRIEF DESCRIPTION

PRESTRESSED BEAM DESIGN DATA - PER BEAM:

LIVE LOAD DISTRIBUTION FACTORS

LIVE LOAD DISTRIBUTION FACTOR FOR MOMENT (2+LANES) = 0.478 LANES PER BEAM
LIVE LOAD DISTRIBUTION FACTOR FOR MOMENT (1 LANE) = 0.582 LANES PER BEAM
LIVE LOAD DISTRIBUTION FACTOR FOR SHEAR (2+LANES) = 0.765 LANES PER BEAM
LIVE LOAD DISTRIBUTION FACTOR FOR SHEAR (1 LANE) = 0.730 LANES PER BEAM

DEAD LOADS

COMPOSITE DEAD LOAD: DC = 188 LB/FT PER BEAM; DW = 211 LB/FT PER BEAM
COMPOSITE SLAB DESIGN STRENGTH : f'c = 3,000 PSI

** CONTRACTOR IS TO FIELD VERIFY BEAM LENGTH PRIOR TO FABRICATING BEAMS.

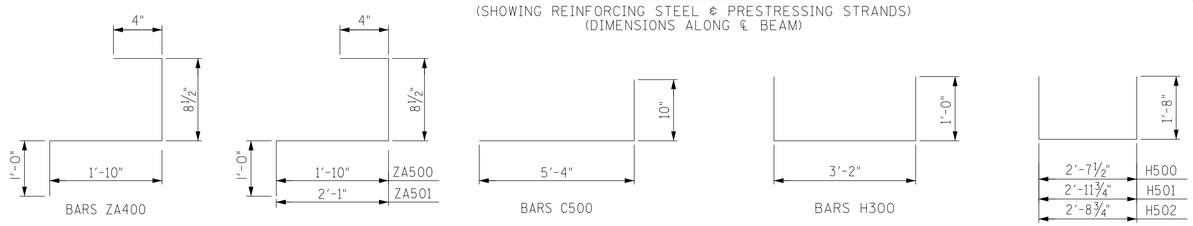

BILL OF STEEL PER BEAM			
BAR	SIZE	NO. REQ'D	LENGTH
A300	3	4	32'-2"
A500	5	4	5'-6"
A501	5	6	2'-8"
A502	5	8	1'-8"
A503	5	5	60'-0"
C500	5	10	6'-2"
H300	3	12	5'-2"
H400	4	46	5'-11 1/2"
H500	5	44	5'-11 1/2"
H501	5	2	6'-3 3/4"
H502	5	4	6'-3/4"
ZA400	4	92	3'-10 1/2"
ZA500	5	32	3'-10 1/2"
ZA501	5	4	4'-1 1/2"

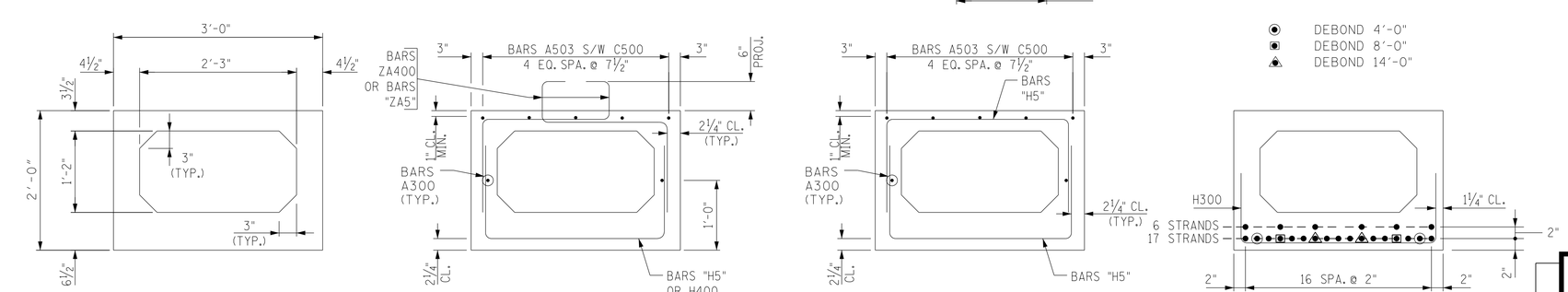

SECTION SHOWING PROPERTIES

SECTION "A"-"A"
(SHOWING PROJECTING STIRRUPS)

SECTION "A"-"A"
(SHOWING NON-PROJECTING STIRRUPS)

SECTION "A"-"A"
(SHOWING STRAND PATTERN)

ESTIMATED QUANTITIES - PER BEAM			
NO. BEAMS REQ'D.	PRESTRESSING STRANDS (LOW-RELAXATION) LBS.	CLASS "A" CONCRETE C.Y.	REINFORCING STEEL LBS.
4	1,119	8.8	1,382

UNOFFICIAL SET

NOT FOR BIDDING

STATE OF TENNESSEE
DEPARTMENT OF TRANSPORTATION
BRIDGE NO. 2
PRESTRESSED BOX
BEAM DETAILS
STATE ROUTE 246
OVER MAYHORN BRANCH
AT L.M. 2.34
BR. NO. 60S61810005
MAURY COUNTY
2016

BR-122-104

DESIGNED BY	VOLKERT	DATE	7/2015
DRAWN BY	C. DIXON/D. HOWARD	DATE	7/2015
SUPERVISED BY	J. ECKEL	DATE	9/2016
CHECKED BY	A. DAVIDSON	DATE	9/2016

VOLKERT

21-SEP-2016 23:49
535000 TDOT Bridge Repair\535003.17_SR246_over_MayhornBranch&_CartersCreek\DGN\Bridge\119_MB_Prest Box Beam Det.dgn

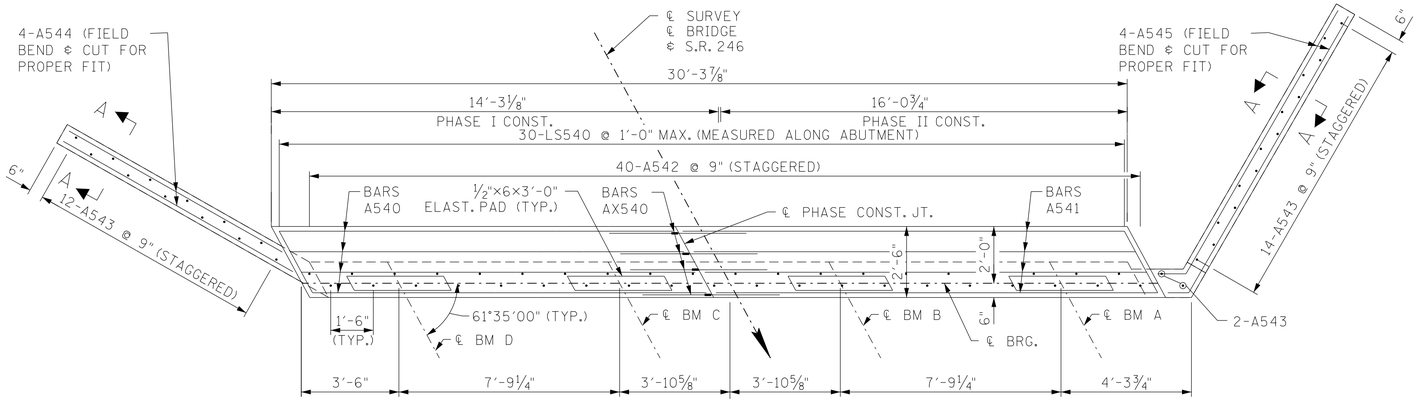

PLAN

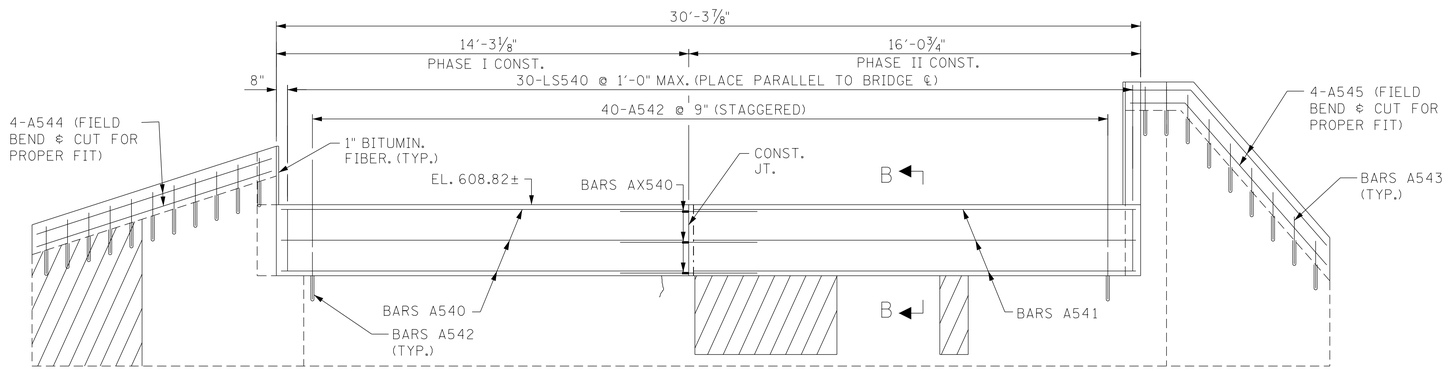

ELEVATION

(LOOKING BACK)

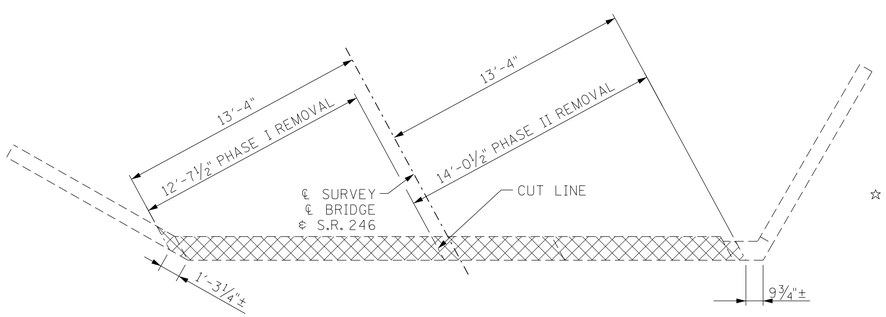

DEMO PLAN

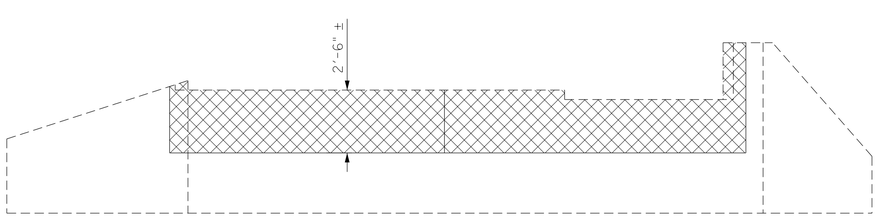

DEMO ELEVATION

(LOOKING BACK)

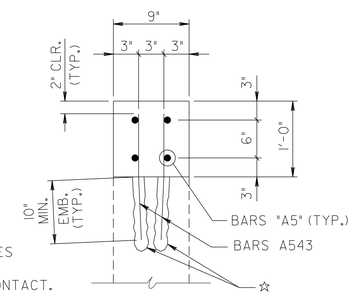

☆ DENOTES: DRILL POCKET 10 DEGREES FROM VERTICAL PLAN. ALTERNATE TO AVOID CONTACT.

SECTION A-A

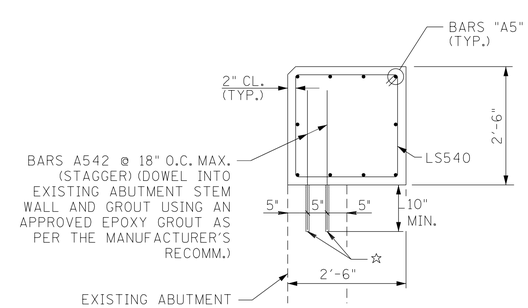

SECTION B-B

PROJECT NO.	YEAR	SHEET NO.
60015-4204-04	2016	____

REVISIONS

NO.	DATE	BY	BRIEF DESCRIPTION

NOTES:

DENOTES: PORTIONS OF EXISTING BRIDGE TO BE REMOVED.

DENOTES: FOR CRACK REPAIR BY EPOXY INJECTION, SEE SPECIAL NOTES FOR EPOXY INJECTION ON DWG. NO. BR-122-86.

DENOTES: AREAS OF EXISTING SPALLED CONCRETE TO BE REPAIRED. SEE SPALL REPAIR DETAILS ON DWG. NO. BR-122-107.

NOTE: PRIOR TO PLACING NEW CONCRETE AGAINST ANY BROKEN OR SCARIFIED SURFACE, AN APPROVED EPOXY ADHESIVE SHALL BE APPLIED TO THE ROUGHENED CONCRETE.

NOTE: THE CONTRACTOR SHALL BE RESPONSIBLE FOR THE STABILITY OF THE STRUCTURE DURING REPAIRS.

NOTE: FOR BAR COUPLER DETAIL, SEE DWG. NO. BR-122-107.

BILL OF STEEL

BAR	SIZE	NO REQ'D.	BENDING DIMENSION A	B	C	D	LENGTH
A540	5	10	13'-11"				13'-11"
A541	5	10	15'-9"				15'-9"
A542	5	40	2'-4"				2'-4"
A543	5	28	1'-8"				1'-8"
A544	5	4	9'-3"				9'-3"
A545	5	4	11'-11"				11'-11"
AX540	5	10	2'-5"				4'-10"
LS540	5	30	2'-5 1/2"	2'-2"			10'-2"

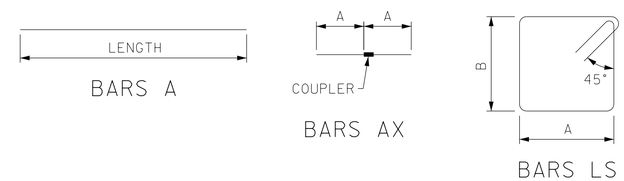

ESTIMATED QUANTITIES

LOCATION	ITEM NO. 604-10.05 S.F.	ITEM NO. 604-10.54 S.F.	ITEM NO. 604-10.62 L.F.	CLASS A CONCRETE (BRIDGES) C.Y.	STEEL BAR REINFORCEMENT (BRIDGES) LBS.
ABUT. 1	24	24	1	7.9	912

UNOFFICIAL SET

NOT FOR BIDDING

STATE OF TENNESSEE
DEPARTMENT OF TRANSPORTATION

BRIDGE NO. 2
ABUTMENT NO. 1

STATE ROUTE 246
OVER MAYHORN BRANCH
AT L.M. 2.34
BR. NO. 60S61810005
MAURY COUNTY
2016

BR-122-105

DESIGNED BY	VOLKERT	DATE	7/2015
DRAWN BY	C. DIXON/D. HOWARD	DATE	7/2015
SUPERVISED BY	J. ECKEL	DATE	9/2016
CHECKED BY	A. DAVIDSON	DATE	9/2016

VOLKERT

21-SEP-2016 23:49
535000 TDOT Bridge Repair\535003.17_SR246_over_MayhornBranch&_CartersCreek\DGN\Bridge\120_MB_Abutment No.1.dgn

PROJECT NO.	YEAR	SHEET NO.
60015-4204-04	2016	

REVISIONS

NO.	DATE	BY	BRIEF DESCRIPTION

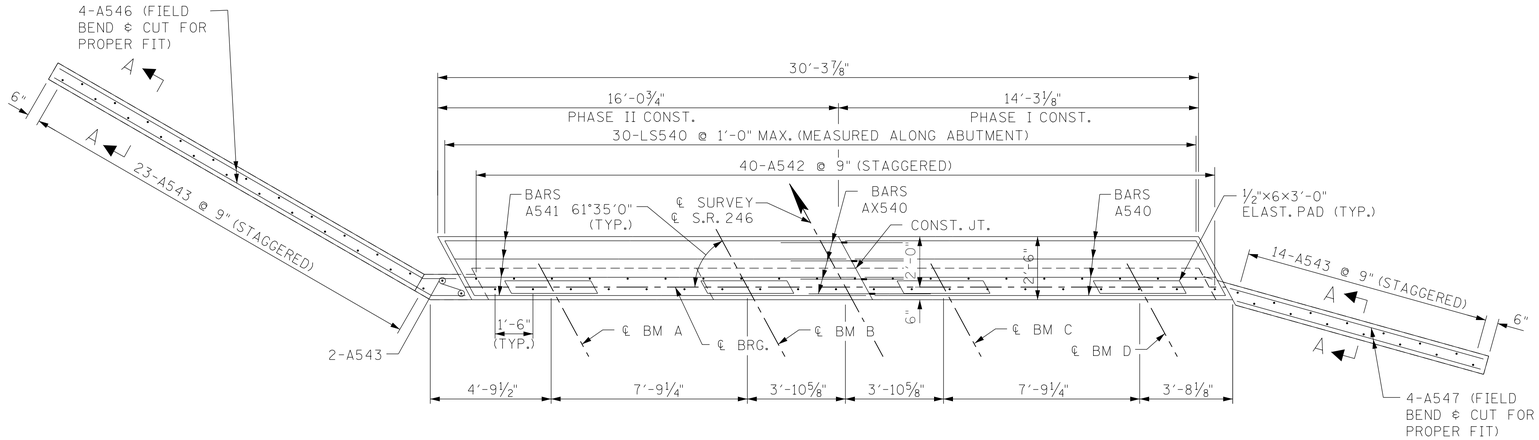

PLAN

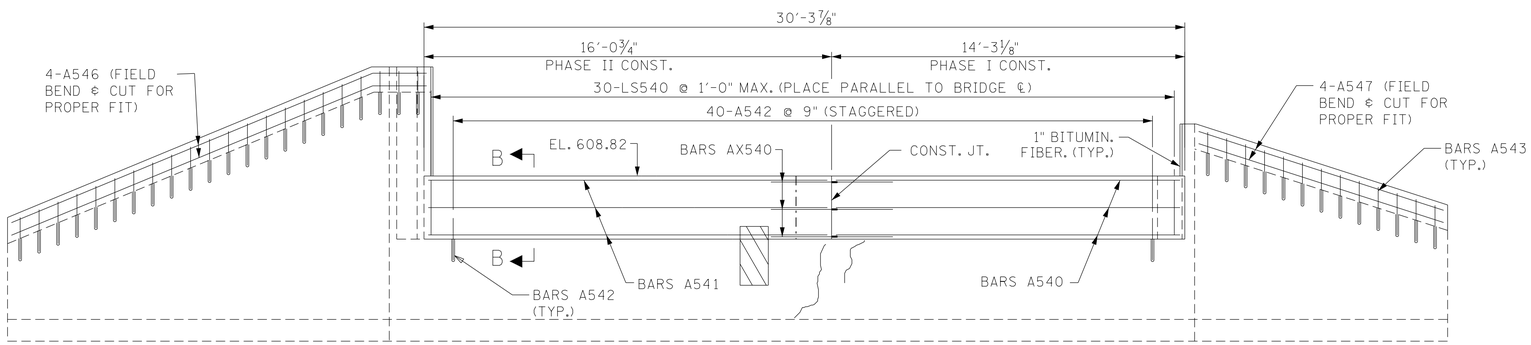

ELEVATION

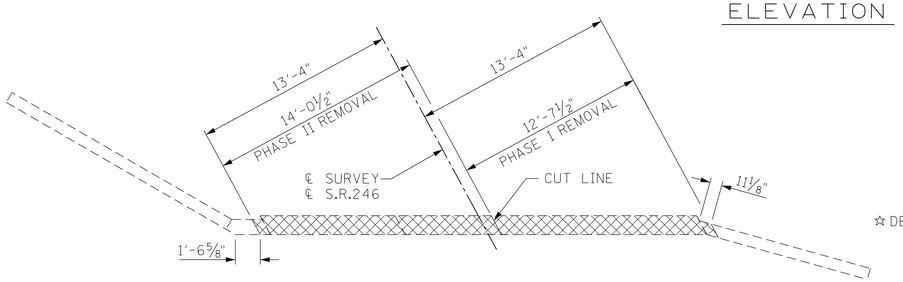

DEMO PLAN

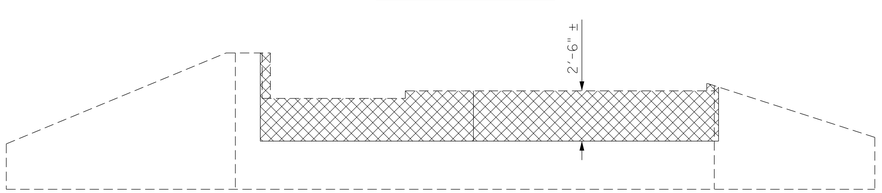

DEMO ELEVATION
(LOOKING AHEAD)

☆ DENOTES: DRILL POCKET 10 DEGREES FROM VERTICAL PLAN. ALTERNATE TO AVOID CONTACT.

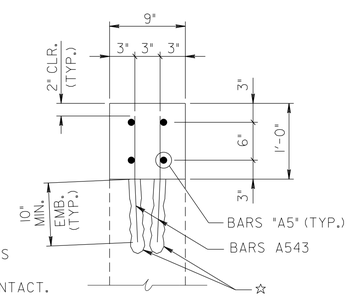

SECTION A-A

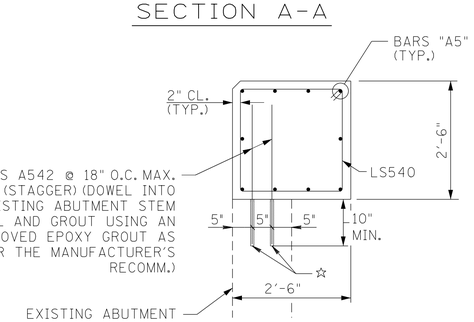

SECTION B-B

NOTES:

DENOTES: PORTIONS OF EXISTING BRIDGE TO BE REMOVED.

DENOTES: FOR CRACK REPAIR BY EPOXY INJECTION, SEE SPECIAL NOTES FOR EPOXY INJECTION ON DWG. NO. BR-122-86.

DENOTES: AREAS OF EXISTING SPALLED CONCRETE TO BE REPAIRED. SEE SPALL REPAIR DETAILS ON DWG. NO. BR-122-107.

NOTE: PRIOR TO PLACING NEW CONCRETE AGAINST ANY BROKEN OR SCARIFIED SURFACE, AN APPROVED EPOXY ADHESIVE SHALL BE APPLIED TO THE ROUGHENED CONCRETE.

NOTE: THE CONTRACTOR SHALL BE RESPONSIBLE FOR THE STABILITY OF THE STRUCTURE DURING REPAIRS.

NOTE: FOR BAR COUPLER DETAIL, SEE DWG. NO. BR-122-107.

BILL OF STEEL

BAR	SIZE	NO REQ'D.	BENDING DIMENSION A	B	C	D	LENGTH
A540	5	10	13'-11"				13'-11"
A541	5	10	15'-9"				15'-9"
A542	5	40	2'-4"				2'-4"
A543	5	39	1'-8"				1'-8"
A546	5	4	18'-5"				18'-5"
A547	5	4	10'-3"				10'-3"
AX540	5	10	2'-5"				4'-10"
LS540	5	30	2'-5 1/2"	2'-2"			10'-2"

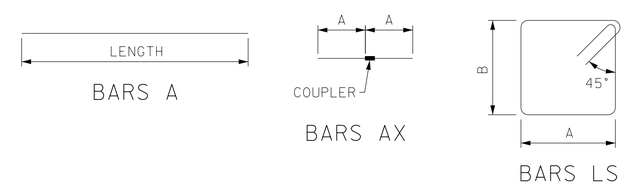

ESTIMATED QUANTITIES

LOCATION	ITEM NO. 604-10.05 S.F.	ITEM NO. 604-10.54 S.F.	ITEM NO. 604-10.62 L.F.	CLASS A CONCRETE (BRIDGES) C.Y.	STEEL BAR REINFORCEMENT (BRIDGES) LBS.
ABUT. 2	2	2	8	8.1	962

UNOFFICIAL SET

NOT FOR BIDDING

STATE OF TENNESSEE
DEPARTMENT OF TRANSPORTATION
BRIDGE NO. 2
ABUTMENT NO. 2

STATE ROUTE 246
OVER MAYHORN BRANCH
AT L.M. 2.34
BR. NO. 60S61810005
MAURY COUNTY
2016

BR-122-106

DESIGNED BY	VOLKERT	DATE	7/2015
DRAWN BY	C. DIXON/D. HOWARD	DATE	7/2015
SUPERVISED BY	J. ECKEL	DATE	9/2016
CHECKED BY	A. DAVIDSON	DATE	9/2016

VOLKERT

21-SEP-2016 23:49
535000 TDOT Bridge Repair\535003.17_SR246_over_MayhornBranch&_CarterSCreek\DGN\Bridge\121_MB_Abutment No. 2.dgn

PROJECT NO.	YEAR	SHEET NO.
60015-4204-04	2016	

REVISIONS

NO.	DATE	BY	BRIEF DESCRIPTION

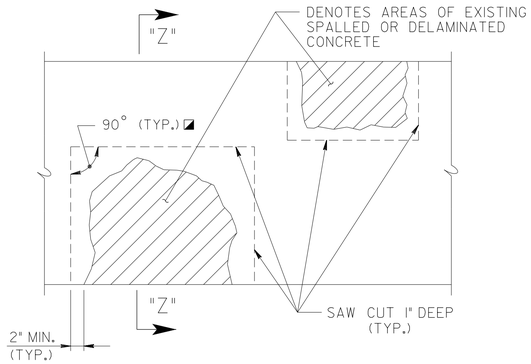

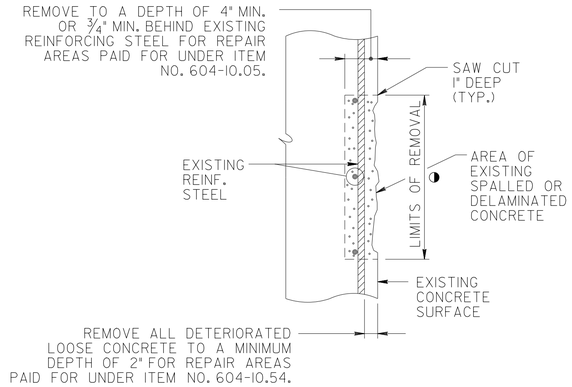

SECTION "Z"-"Z"

DETAIL SHOWING AREAS OF EXISTING SPALLED OR DELAMINATED CONCRETE SURFACES TO BE REMOVED AND REPAIRED

◒ DENOTES: LIMITS AND LOCATION OF REPAIRS TO BE DESIGNATED BY THE ENGINEER.

◪ DENOTES: SAW CUT EXISTING CONCRETE SURFACES SO AS TO OBTAIN SQUARED CORNERS.

NOTE: EXTREME CARE SHALL BE TAKEN WHEN REMOVING THE EXISTING SPALLED OR DELAMINATED CONCRETE SO AS NOT TO DAMAGE THE EXISTING REINFORCING STEEL. ALL EXPOSED EXISTING REINFORCING STEEL SHALL RECEIVE A COMPLETE CLEANING TO REMOVE ALL RUST. ALL EXISTING REINFORCEMENT SHALL REMAIN IN PLACE AND INCORPORATED INTO THE NEW CONSTRUCTION. ALL WORK MUST MEET WITH THE FULL APPROVAL OF THE ENGINEER.

THE ENGINEER SHALL HAVE THE OPTION OF DESIGNATING A SPALLED OR DELAMINATED AREA TO BE REPAIRED UNDER ITEM NO. 604-10.05 OR 604-10.54. PATCHING MATERIAL FOR ITEM NO. 604-10.05 SHALL BE HIGH EARLY STRENGTH CONCRETE. PATCHING MATERIAL FOR ITEM NO. 604-10.54 SHALL BE A POLYMER MODIFIED CEMENTITIOUS STRUCTURAL PATCHING MATERIAL. SEE T.D.O.T. QUALIFIED PRODUCTS LIST 13, SECTION B.6.

NOTE: PNEUMATICALLY PLACED CONCRETE IS NOT ALLOWED.

COST OF SAW CUTTING, REMOVING SPALLED OR DELAMINATED CONCRETE, CLEANING, PATCHING MATERIAL, LABOR AND ANY MISCELLANEOUS MATERIALS NECESSARY TO COMPLETE THE REPAIRS AS SHOWN TO BE INCLUDED IN ITEM NO. 604-10.54, CONCRETE REPAIRS, S.F. OR ITEM NO. 604-10.05, CONCRETE, S.F.

THE ENGINEER SHALL DESIGNATE ALL SPALLED OR DELAMINATED CONCRETE REPAIR AREAS IN THE FIELD. QUANTITIES GIVEN ARE APPROXIMATE. ITEM NO. 604-10.05 AND 604-10.54 SHALL BE BID WITH THE CONTINGENCY THAT THEY MAY BE INCREASED, DECREASED OR ELIMINATED AS DIRECTED BY THE ENGINEER.

POWER HAND DRIVEN TOOLS USED FOR REMOVAL OF UNSOUND CONCRETE ARE SUBJECT TO THE FOLLOWING RESTRICTIONS:

1. PNEUMATIC HAMMERS HEAVIER THAN THE 35 LB. CLASS SHALL NOT BE USED.
2. CHIPPING HAMMERS OF THE 15 LB. CLASS SHALL BE USED TO REMOVE CONCRETE FROM BEHIND REINFORCING STEEL.

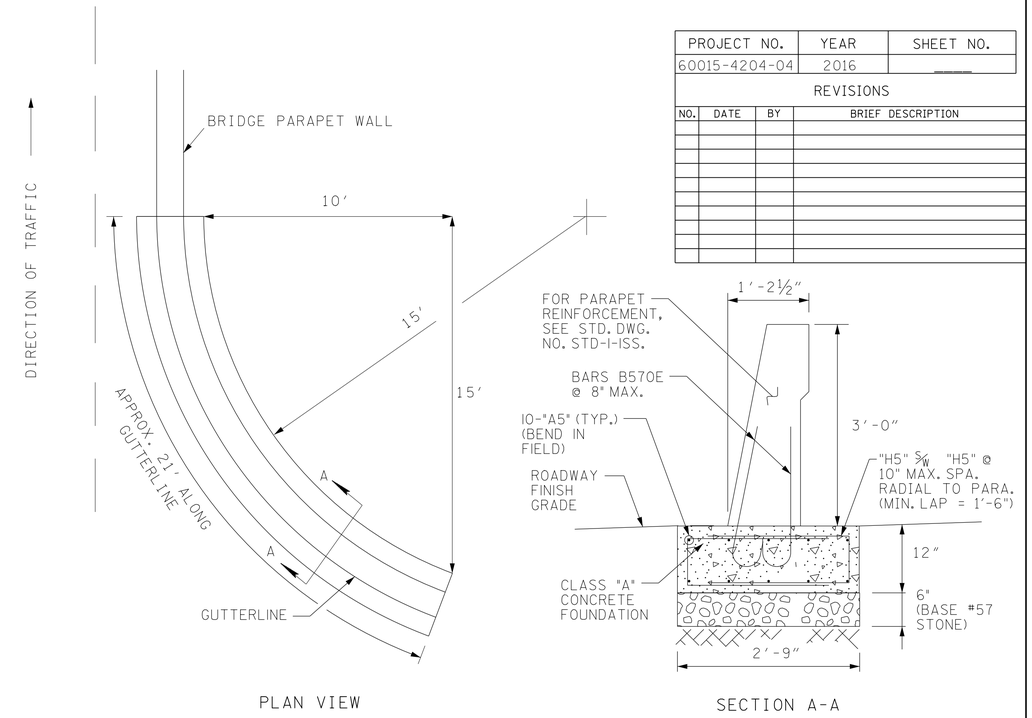

CURVED BARRIER DETAIL

NOTE: BARS B570E ARE INCLUDED IN THE SUPERSTRUCTURE BILL OF STEEL. ALL OTHER COSTS ASSOCIATED WITH CONSTRUCTION OF THE CURVED BARRIER INCLUDING ALL CONCRETE, REINFORCING STEEL, AND BASE STONE SHALL BE INCLUDED IN THE UNIT PRICE BID FOR ITEM NO. 620-05.01.

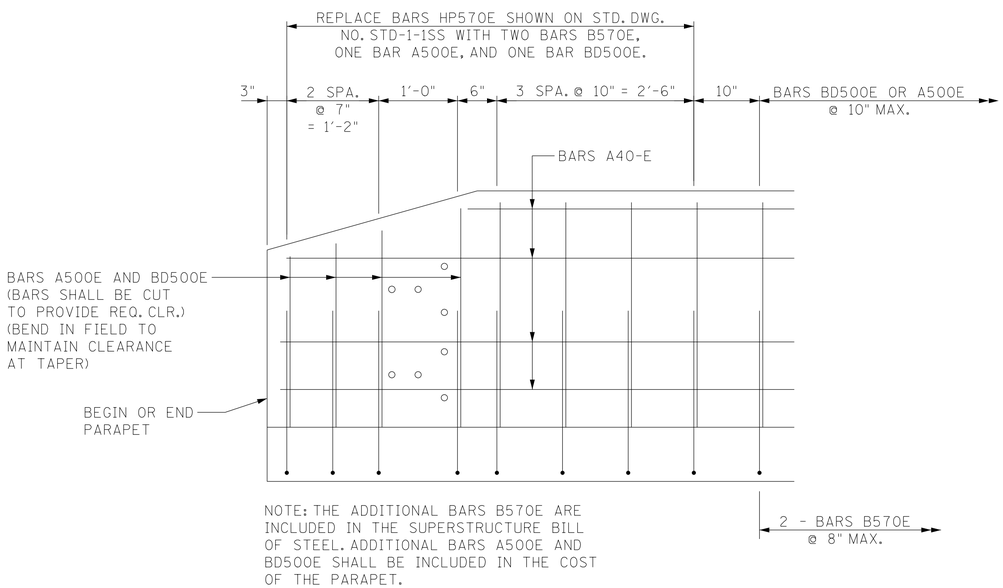

NOTE: THE ADDITIONAL BARS B570E ARE INCLUDED IN THE SUPERSTRUCTURE BILL OF STEEL. ADDITIONAL BARS A500E AND BD500E SHALL BE INCLUDED IN THE COST OF THE PARAPET.

END POST MODIFICATION DETAIL

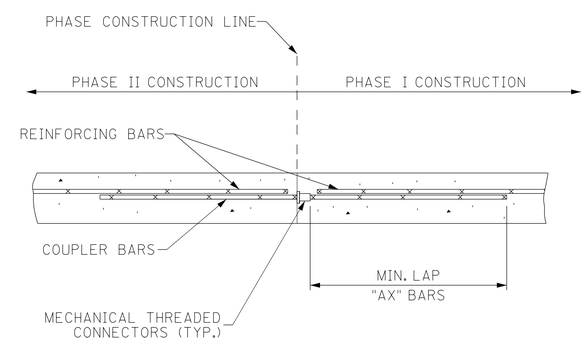

COUPLER BAR DETAIL

(SHOWING REINFORCING STEEL SPLICING WITH MECHANICAL THREADED CONNECTORS)

NOTE:
COST OF MECHANICAL THREADED CONNECTORS WITH COUPLER BARS TO BE INCLUDED UNDER ITEM NO. 604-02.03, EPOXY COATED REINFORCEMENT STEEL, (LBS.) OR ITEM NUMBER 604-03.02, STEEL BAR REINFORCEMENT (BRIDGE), (LBS.). INSTALLATION MUST MEET WITH THE APPROVAL OF THE ENGINEER.

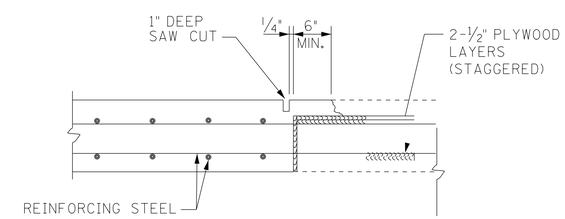

SLAB CONSTRUCTION JOINT

(TRANSVERSE JOINT SHOWN, LONGITUDINAL JOINT SIMILAR)
NO SCALE

NOTE:
ALL SLAB CONSTRUCTION JOINTS SHALL BE ACCORDANCE WITH THE SLAB CONSTRUCTION JOINT DETAIL.

STATE OF TENNESSEE
DEPARTMENT OF TRANSPORTATION
BRIDGE NOS. 1 & 2
MISCELLANEOUS REPAIR DETAILS
STATE ROUTE 246
OVER CARTERS CREEK &
STATE ROUTE 246
OVER MAYHORN BRANCH
BR. NO. 60S61810003 &
BR. NO. 60S61810005
MAURY COUNTY
2016

UNOFFICIAL SET
NOT FOR BIDDING

DESIGNED BY	VOLKERT	DATE	10/2015
DRAWN BY	C. DIXON	DATE	10/2015
SUPERVISED BY	J. ECKEL	DATE	09/2016
CHECKED BY	A. DAVIDSON	DATE	09/2016

VOLKERT

BR-122-107

21-SEP-2016 23:49
535000 TDOT Bridge Repair\535003.17_SR246_over_MayhornBranch&_CartersCreek\DGN\Bridge\122_ Misc.Repair.dgn