PROJECT NO.	YEAR	SHEET NO.
79224-4205-04	2015	

REVISIONS

NO.	DATE	BY	BRIEF DESCRIPTION

2-4"ø UTILITY LINES AND 1-2"ø UTILITY LINE TO BE RELOCATED BY OWNER OF UTILITIES

CONCRETE AREA TO BE REMOVED

ASPHALT AREA TO BE REMOVED

** MATCH EXISTING SLOPE

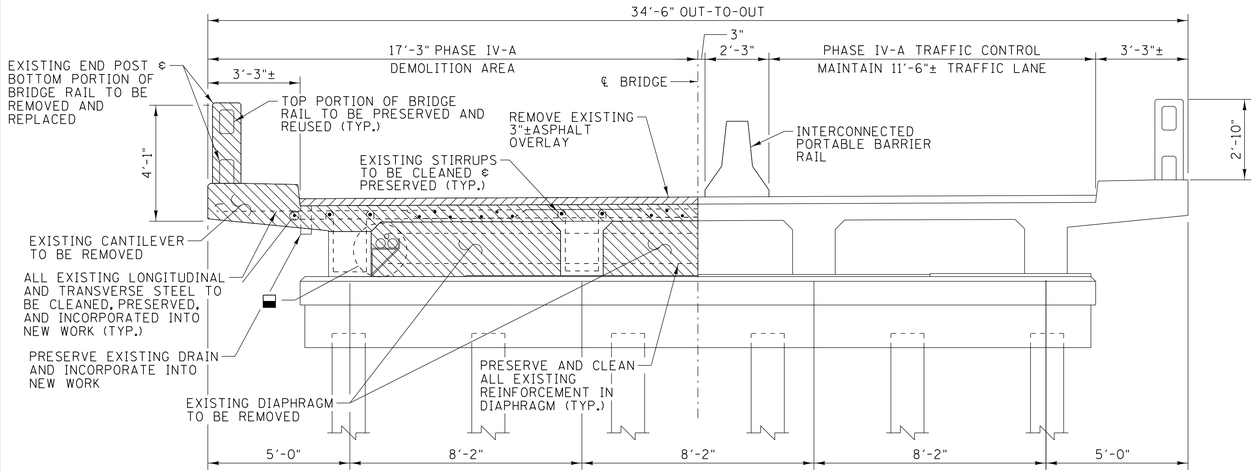

PHASE IV-A: DEMOLITION

(TYP. BENT NO. 3)
(FIXED DIAPHRAGM SHOWN, EXPANSION DIAPHRAGM SIMILAR)
SCALE: 3/8" = 1'-0"

NOTE:

ALL REINFORCEMENT TO BE PRESERVED. CLEANED AND INCORPORATED INTO NEW WORK.

NOTES:

FOR NOTES AND DETAILS REGARDING NEW CONCRETE END POST AND BOTTOM RAIL, SEE DWG. NO. BR-118-218A.

FOR ADDITIONAL NOTES AND DETAILS, SEE DWG. NO. BR-118-202.

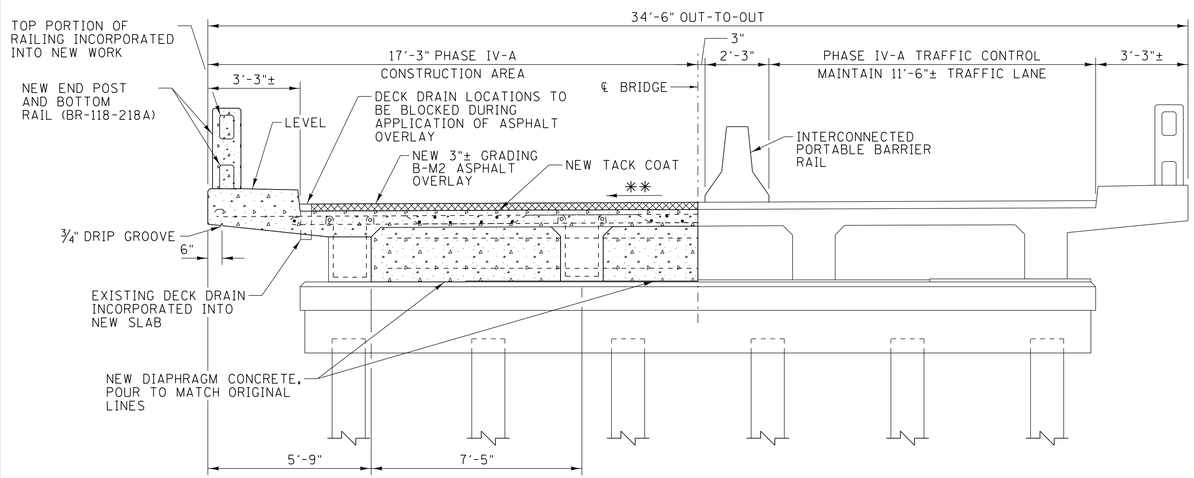

PHASE IV-A: CONSTRUCTION

(TYP. BENT NO. 3)
TYP. FIXED DIAPHRAGM
SCALE: 3/8" = 1'-0"

26.90

STATE OF TENNESSEE
DEPARTMENT OF TRANSPORTATION

BRIDGE REPAIR DETAILS

SR14 OVER LOOSAHATCHIE RIVER
BRIDGE NO. 79-SR14-26.90

SHELBY COUNTY
2015

AMJAD S. KHAIRI
REGISTERED ENGINEER
AGRICULTURE
COMMERCE
No. 106655
04/27/15
STATE OF TENNESSEE

GARVER

DESIGNED BY	J. L. HALBROOK	DATE	APR 2015
DRAWN BY	C. J. HALBROOK	DATE	APR 2015
SUPERVISED BY	J. H. RUDDELL	DATE	APR 2015
CHECKED BY	A. J. KHAIRI	DATE	APR 2015

TN D.O.T. ENGINEERING SUPERVISOR M. LAWSON

BR-118-204

JLHalbrook 4/27/2015 10:41:11 AM
WORKSPACE: TDOT Bridge
L:\2015\15017002 - Repair Five Bridges Shelby County\Drawings\BRG\03 - Final\BR-118-204.dgn