PROJECT NO.	YEAR	SHEET NO.
79224-4205-04	2015	

REVISIONS

NO.	DATE	BY	BRIEF DESCRIPTION

▬ 2-4"ø UTILITY LINES AND 1-2"ø UTILITY LINE TO BE RELOCATED BY OWNER OF UTILITIES

✳ EXTERIOR WOOD ELEMENTS SHALL RUN FULL LENGTH BETWEEN STEEL X-BRACE LOCATIONS

⊕ EXTERIOR WOOD ELEMENT SHALL RUN FULL LENGTH OF SPAN NOS. 10-12

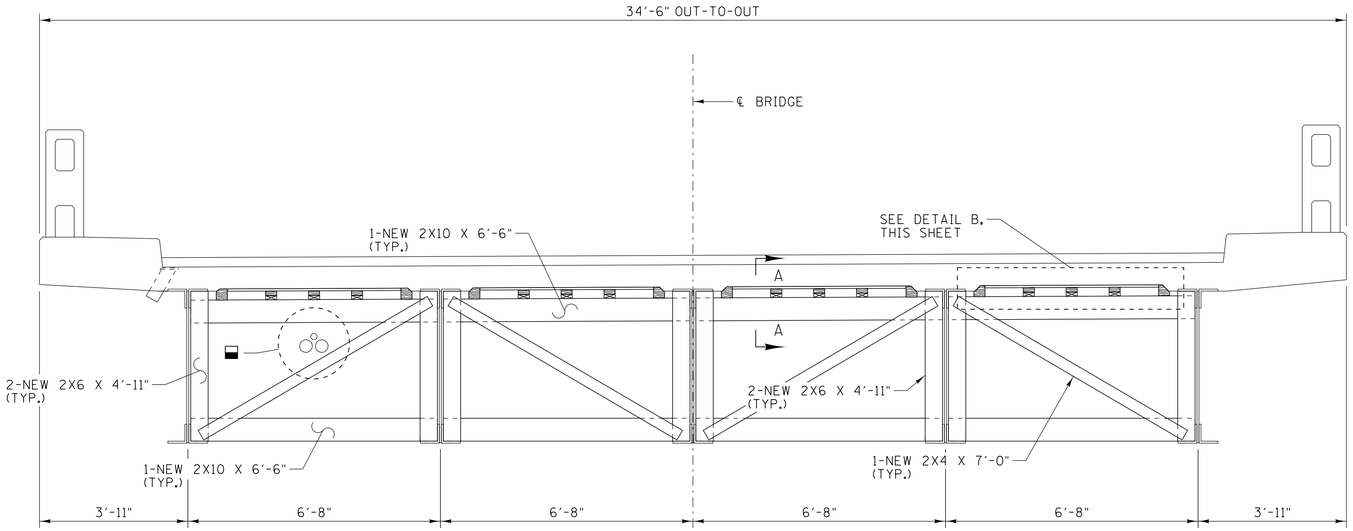

TYPICAL SECTION
(TYP. @ SPAN NOS. 10-12)
SCALE: ½" = 1'-0"

NOTE:

CONNECTOR BRACKETS NOT SHOWN FOR CLARITY.

NOTES:

ALL TIMBER MATERIALS SHALL BE STRUCTURAL GRADED TREATED (EXTERIOR) TIMBER AS SPECIFIED IN AASHTO M-133 AND SECTION 911 OF THE STANDARD SPECIFICATIONS.

ALL MATERIAL MUST MEET THE FULL APPROVAL OF THE T.D.O.T. ENGINEER.

ALL TREATED TIMBER DIMENSIONS ARE NOMINAL DIMENSIONS STANDARD TO THE TIMBER INDUSTRY EXCEPT AS NOTED.

TIMBER CONSTRUCTION SHALL CONFORM TO THE REQUIREMENTS OF SECTION 601 OF THE TDOT STANDARD SPECIFICATIONS.

FOR ADDITIONAL NOTES FOR TIMBER, SEE DWG. NO. BR-118-192.

NOTES:

FOR TIMBER BRACING LOCATIONS, SEE DWG. NOS. BR-118-188 THRU BR-118-189.

COST OF TREATED TIMBER, NAILS, ANGLE BRACKETS AND ALL LABOR AND ANY MISCELLANEOUS ITEMS FOR PLACEMENT OF NEW TIMBER BRACING MEMBERS SHALL BE INCLUDED IN ITEM NO. 604-10.90, MISCELLANEOUS ITEMS, LS.

ALL TREATED LONGITUDINAL 2X4 MEMBERS TO BE ATTACHED TO TREATED PLYWOOD ALONG LENGTH OF SPANS USING TDOT APPROVED FASTENERS SPACED EVERY 6". MEMBER SECTIONS SHALL END AT STAGGERED LOCATIONS. ATTACHMENT MUST MEET THE FULL APPROVAL OF T.D.O.T ENGINEER.

NOTE:

CONTRACTOR IS RESPONSIBLE FOR MEASURING DIMENSIONS IN FIELD AND INSTALLING TIMBER BRACING SYSTEM SUCH THAT NO GAPS OCCUR AND THE BRACE FITS TIGHTLY BETWEEN GIRDERS.

ESTIMATED QUANTITIES

BRACE ELEMENTS (PER SUPPORT LOCATION)		
SIZE	NO. REQ'D	LENGTH
2 X 4	1	7'-0"
2 X 6	4	4'-11"
2 X 10	2	6'-6"
12 GA BRACKET	3	-

NOTES:

ALL DIMENSIONS SHALL BE FIELD VERIFIED BY CONTRACTOR PRIOR TO FABRICATION.

"NO. REQ'D IS FOR ONE (1) TIMBER SUPPORT LOCATION, THREE HUNDRED AND FORTY SEVEN (347) TIMBER SUPPORT LOCATIONS REQUIRED.

CONTINUOUS ELEMENTS (PER BAY)		
2 X 4	3	252'-0"
4 X 4	2	252'-0"
¾" PLYWOOD	1	262'-0"

NOTES:

ALL DIMENSIONS SHALL BE FIELD VERIFIED BY CONTRACTOR PRIOR TO FABRICATION.

"NO. REQ'D IS FOR ONE (1) BAY LOCATION, FOUR (4) BAY LOCATIONS REQUIRED.

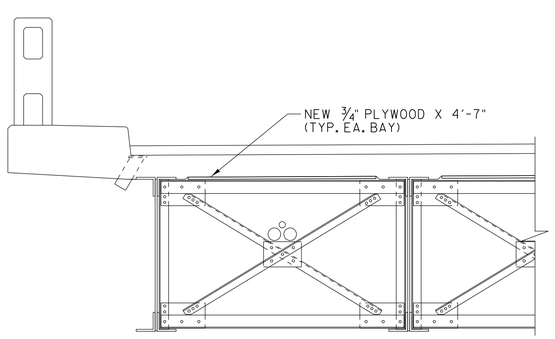

PART TYPICAL SECTION
(TYP. @ X-BRACE LOCATION)
SCALE: ½" = 1'-0"

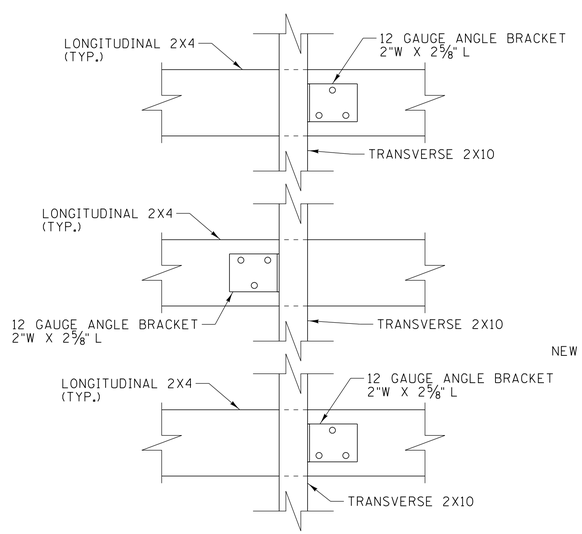

SECTION B-B
SCALE: 3" = 1'-0"

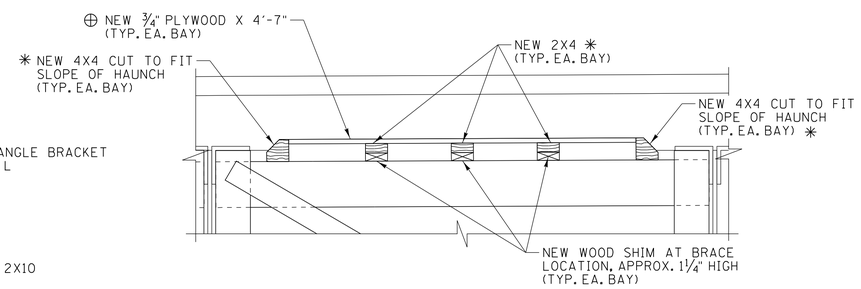

DETAIL B
SCALE: 1" = 1'-0"

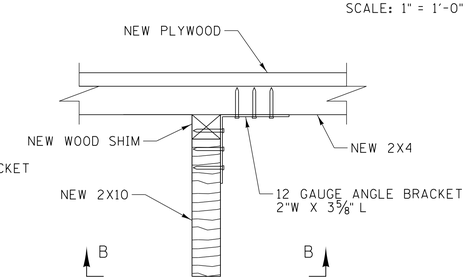

SECTION A-A
SCALE: 3" = 1'-0"

NOTE:

THREE (3) ANGLE BRACKETS TYPICAL AT EACH BRACE.

26.90

STATE OF TENNESSEE
DEPARTMENT OF TRANSPORTATION

BRIDGE REPAIR DETAILS

SR14 OVER LOOSAHATCHIE RIVER
BRIDGE NO. 79-SR14-26.90

SHELBY COUNTY
2015

AMJAD S. KHAIRI
REGISTERED ENGINEER
AGRICULTURE
COMMERCE
No. 106650
STATE OF TENNESSEE
4/27/15

GARVER

DESIGNED BY	J. L. HALBROOK	DATE	APR 2015
DRAWN BY	C. W. THOMAS	DATE	APR 2015
SUPERVISED BY	J. H. RUDDELL	DATE	APR 2015
CHECKED BY	A. J. KHAIRI	DATE	APR 2015

TN D.O.T. ENGINEERING SUPERVISOR M. LAWSON

JLHalbrook 4/27/2015 11:28:04 AM
WORKSPACE: TDOT Bridge
L:\2015\5017002 - Repair Five Bridges Shelby County\Drawings\BRG\03 - Final\BR-118-207.dgn