NOTE:

TYPICAL LIFTING STRAPS TO BE 3 - ½" DIA. 270K PRESTRESSING STRANDS

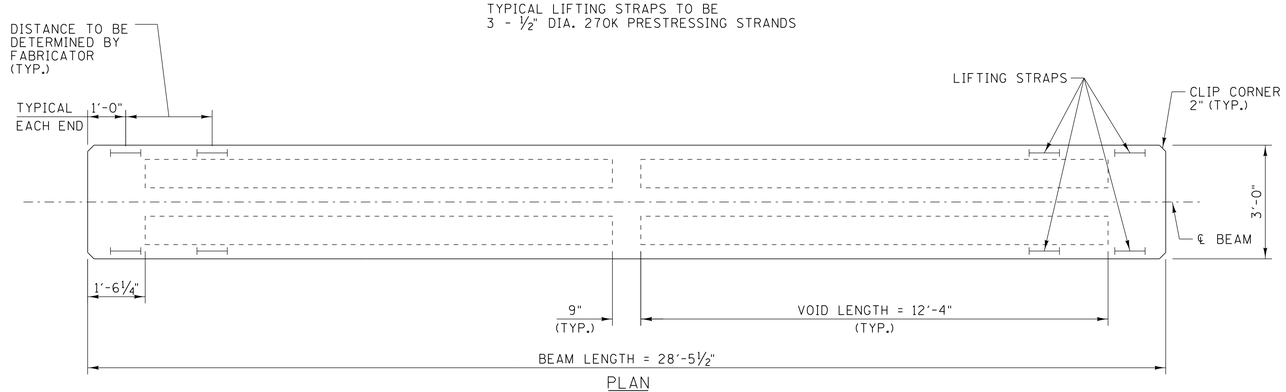

PLAN

SCALE: ½" = 1'-0"

BILL OF STEEL				
BAR	SIZE	NO. REQ'D	A	LENGTH
A540	5	4		28'-2"
A541	5	6		2'-8"
A542	5	8		1'-5"
H340	3	14	2'-9½"	5'-5½"
H440	4	41	2'-7½"	5'-5½"
ZA440	4	82		4'-1⅞"

NOTE:
"NO. REQ'D" IS FOR ONE (1) BEAM, SIX (6) BEAMS REQ'D.

ALL DIMENSIONS ARE OUT-TO-OUT.

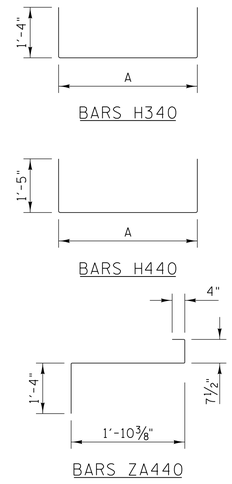

PROJECT NO.	YEAR	SHEET NO.
79224-4205-04	2015	

REVISIONS

NO.	DATE	BY	BRIEF DESCRIPTION

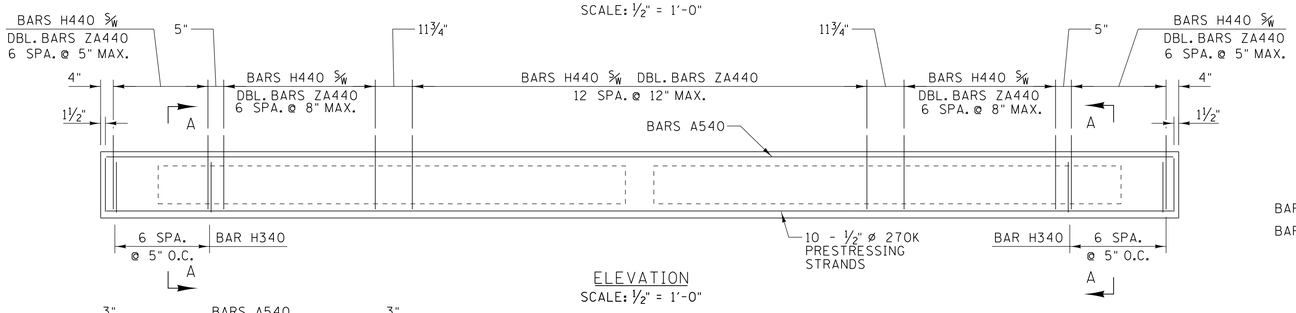

ELEVATION

SCALE: ½" = 1'-0"

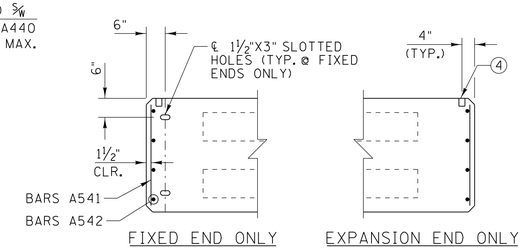

PART PLAN

SCALE: ½" = 1'-0"

NOTES:

THE TOP OF THE BEAM SHALL BE ROUGH FLOATED. AT APPROXIMATELY THE TIME OF INITIAL SET, THE TOP OF THE BEAM WILL ALSO BE SCRUBBED TRANSVERSELY WITH A COARSE WIRE BRUSH TO REMOVE ALL LAITANCE AND PRODUCE A ROUGH SURFACE.

MILD STEEL REINFORCING SHALL BE ASTM A615 GRADE 60.

ALL PRESTRESSING STRANDS SHALL BE ½" DIA. ASTM GRADE 270:7 WIRE UNCOATED LOW RELAXATION PRESTRESSING STRANDS.

THE CONCRETE FOR THIS CONSTRUCTION SHALL BE A OF SUCH PROPERTIES AS TO ATTAIN A COMPRESSIVE STRENGTH OF 5,000 PSI AT THE AGE OF 28 DAYS AND STRESS TRANSFER SHALL NOT BE MADE TO THE BRIDGE MEMBER UNTIL THE TEST SPECIMENS INDICATE THAT THE CONCRETE HAS REACHED A COMPRESSIVE STRENGTH OF AT LEAST 4,000 PSI.

AN INITIAL FORCE OF 31,000 LB. SHALL BE APPLIED TO EACH STRAND.

PRESTRESSING STRANDS SHALL NOT BE GREATER THAN ½" DIAMETER.

COST OF FORMING SIX (6) NEW PRECAST BEAMS, AND ALL THE LABOR AND MATERIAL NECESSARY TO FABRICATE THE NEW BEAMS AS SHOWN ON THIS SHEET, SHALL BE PAID FOR UNDER ITEM NO. 615-02.03, PRESTRESSED CONCRETE BOX BEAM (21" X 36"), L.F.

1" DIAMETER WEEP HOLES SHALL BE PROVIDED AT THE LOW POINT OF EACH CELL. VENT HOLES SHALL BE PROVIDED IN THE TOP OF EACH CELL DURING FABRICATION TO RELIEVE GAS PRESSURES THAT OCCUR DURING CURING. THE VENT HOLES SHALL BE PLUGGED AFTER CURING IS COMPLETED.

THE SEQUENCE FOR TRANSFER OF STRESS OR CUTTING THE STRANDS SHALL BE IN ACCORDANCE WITH ARTICLE 615.14 OF THE "STANDARD SPECIFICATIONS FOR ROAD AND BRIDGE CONSTRUCTION" AND SHALL BE SHOWN ON THE APPROVED SHOP DRAWINGS. AT NO TIME SHALL MORE THAN 1/6TH OF TOTAL PRESTRESSING FORCE BE ECCENTRIC ABOUT THE CENTERLINE OF THE BEAM.

COST OF REINFORCING STEEL IN THE NEW BEAMS WILL NOT BE MEASURED FOR SEPARATE PAYMENT, BUT WILL BE INCLUDED IN ITEM NO. 615-02.03, PRESTRESSED CONCRETE BOX BEAM (21" X 36"), L.F.

COST OF ELASTOMERIC PADS SHOWN ON THIS SHEET, RUBBER BONDING CEMENT, AND DOWEL BARS TO BE INCLUDED IN COST OF PRESTRESSED BEAMS.

ALL DIMENSIONS SHALL BE FIELD VERIFIED BY THE CONTRACTOR PRIOR TO FABRICATION.

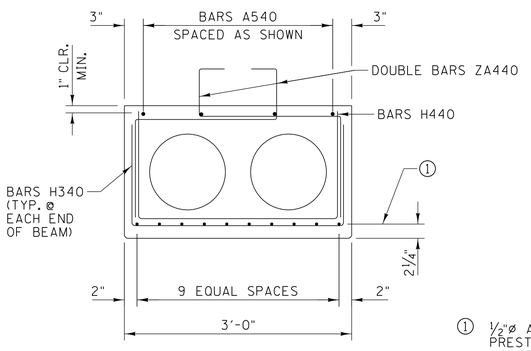

SECTION A-A

(SHOWING PROJECTING REINFORCING STEEL)
SCALE: 1" = 1'-0"

① ½"ø ASTM GRADE 270K PRESTRESSING STRANDS (10 STRANDS REQUIRED)

② ℄ OF 1½" SLOTTED HOLES FOR 1" DOWEL BARS. GROUTED BARS TO BE 1'-6" LONG. (9" EMBEDMENT AND 9" PROJECTION INTO BEAM END.)

③ ℄ ⅝"ø THREADED STEEL INSERTS (CAST IN PLACE) FOR THREADED BARS A550 (SEE DWG. NOS. BR-118-200, BR-118-201, AND BR-118-210). TYPICAL FOR INTERIOR SIDE OF EXTERIOR BEAMS AT BENTS. INSTALL PARALLEL TO BEAM ENDS (TYP.)

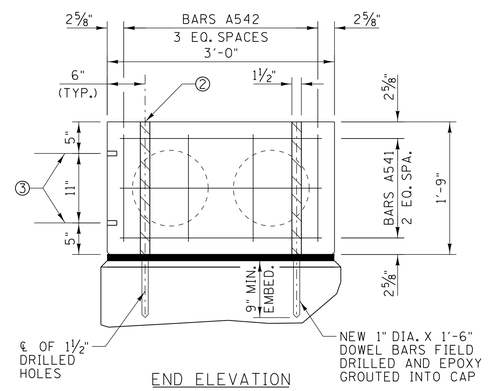

END ELEVATION

(TYP. @ FIXED END ONLY)
SCALE: 1" = 1'-0"

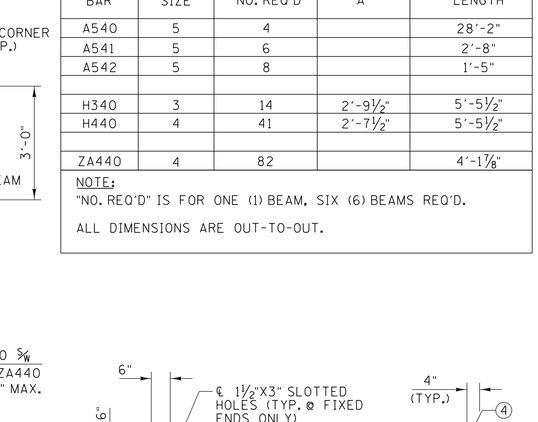

EXPANSION END FIXED END

ELASTOMERIC BEARING PADS

(DUROMETER = 70)
SCALE: 1" = 1'-0"

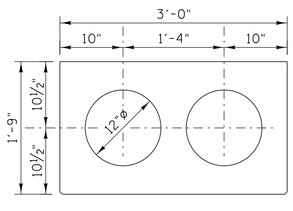

SECTION SHOWING PROPERTIES

SCALE: 1" = 1'-0"

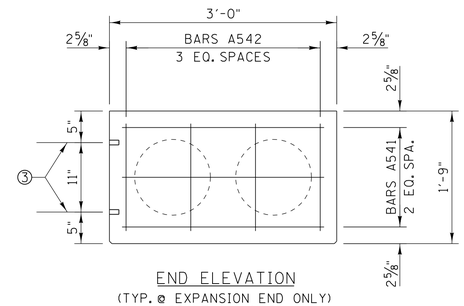

END ELEVATION

(TYP. @ EXPANSION END ONLY)
SCALE: 1" = 1'-0"

STATE OF TENNESSEE
DEPARTMENT OF TRANSPORTATION

BRIDGE REPAIR DETAILS

STATE ROUTE 14
BRIDGE NO. 79-SR14-26.74
BRIDGE NO. 79-SR14-27.25

SHELBY COUNTY
2015

26.74 27.25

AMJAD S. KHAIRI
REGISTERED ENGINEER
AGRICULTURE
NO. 106650
STATE OF TENNESSEE
04/27/15

GARVER

DESIGNED BY	J. L. HALBROOK	DATE	APR 2015
DRAWN BY	C. W. THOMAS	DATE	APR 2015
SUPERVISED BY	J. H. RUDDELL	DATE	APR 2015
CHECKED BY	A. J. KHAIRI	DATE	APR 2015

TN D.O.T. ENGINEERING SUPERVISOR M. LAWSON

BR-118-214

JLHolbrook 4/27/2015 10:49:17 AM
WORKSPACE: TDOT Bridge
L:\2015\150T002 - Repair Five Bridges Shelby County\Drawings\BR0\03 - Final\BR-118-214.dgn