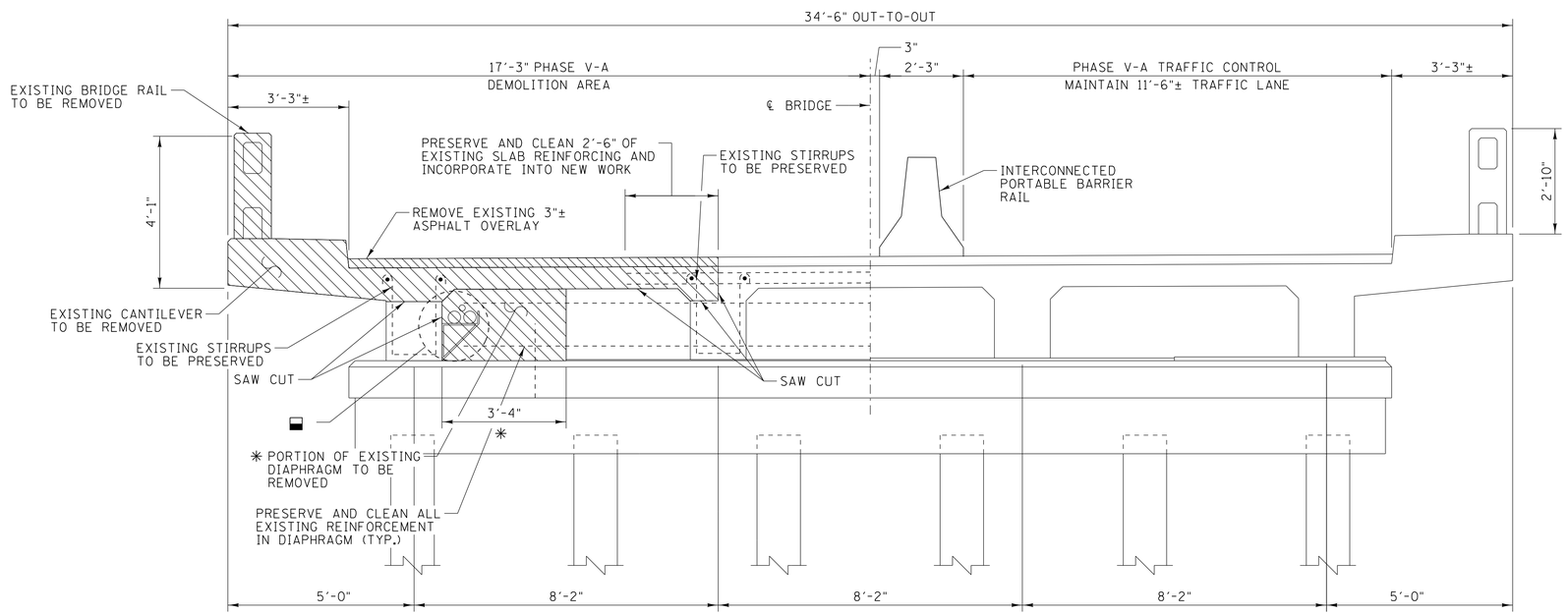

PHASE V-A: DEMOLITION

(TYP. SPAN NO. 1)
SCALE: ½" = 1'-0"

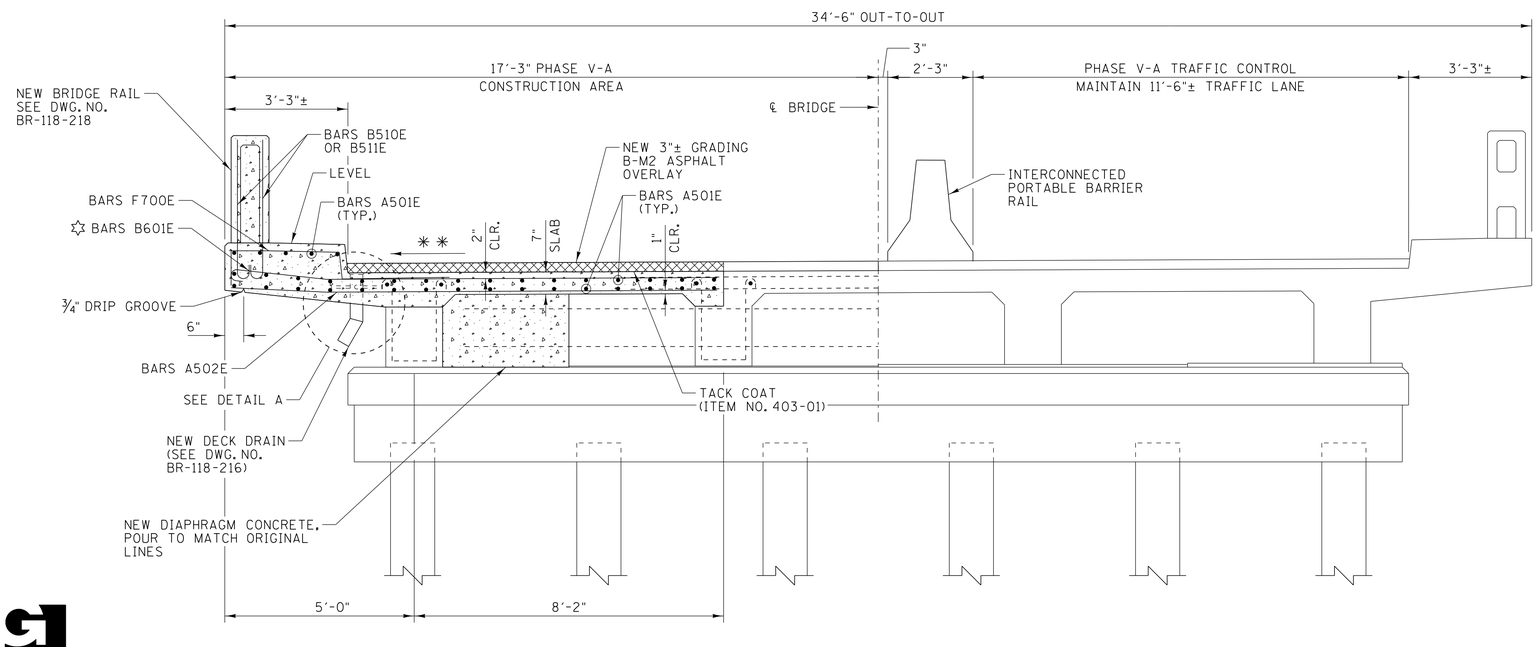

PHASE V-A: CONSTRUCTION

(TYP. SPAN NO. 1)
SCALE: ½" = 1'-0"

2-4"ø UTILITY LINES AND 1-2"ø UTILITY LINE TO BE RELOCATED BY OWNER OF UTILITIES

CONCRETE AREA TO BE REMOVED

ASPHALT AREA TO BE REMOVED

✳ EXACT LIMITS OF REMOVAL TO BE DETERMINED BY TDOT ENGINEER IN FIELD

✳ ✳ MATCH EXISTING SLOPE

BEND IN FIELD AS NEEDED

PROJECT NO.	YEAR	SHEET NO.
79224-4205-04	2015	

REVISIONS

NO.	DATE	BY	BRIEF DESCRIPTION

NOTES:

THE FINISHED GRADE OF THE CONCRETE ROADWAY CENTERLINE SHALL BE PARALLEL TO THE GRADE OF THE EXISTING BRIDGE. THE NEW SLAB SURFACE SHALL HAVE A CROSS SLOPE MATCHING THE EXISTING SLAB. THE LONGITUDINAL GRADE AND CROSS SLOPE SHALL BE PROFILED USING METHODS SUITABLE FOR NEW CONSTRUCTION.

COST OF REMOVING EXISTING ASPHALT AT REPAIR SPANS BE PAID FOR UNDER ITEM NO. 604-10.14, REMOVE EXISTING WEARING SURFACE, LS.

COST OF REMOVING EXISTING CANTILEVERS, BRIDGE RAIL, BEAMS, SLAB, CURB, DIAPHRAGMS, SAW CUTTING AND ALL LABOR AND ANY MISCELLANEOUS ITEMS FOR DEMOLITION AS SHOWN ON THE DETAILS SHALL BE INCLUDED IN ITEM NO. 604-10.13, CONCRETE SLAB REMOVAL, LS. THIS ITEM SHALL ALSO INCLUDE PRESERVATION AND CLEANING OF DIAPHRAGM REINFORCING TO REMAIN.

THE COST OF FORMING AND POURING NEW HIGH EARLY STRENGTH CONCRETE FOR SLAB, CURBS AND DIAPHRAGMS SHALL BE INCLUDED UNDER ITEM NO. 604-10.09, CONCRETE, C.Y.

COST OF ALL REINFORCING STEEL SHALL BE PAID FOR UNDER ITEM NO. 604-10.18, REINFORCING STEEL (REPAIRS), LB.

COST OF NEW DECK DRAINS SHALL BE INCLUDED UNDER ITEM NO. 604-10.09, CONCRETE, C.Y. FOR LOCATIONS, SEE DWG. NO. BR-118-212. FOR DETAILS, SEE DWG. NO. BR-118-216.

COST OF NEW ASPHALT OVERLAY TO BE PAID FOR UNDER ITEM NO. 307-01.08, ASPHALT CONCRETE MIX (PG64-22) (BPMB-HM) GRADING B-M2, TON. FOR NOTES AND DETAILS, SEE DWG. NO. BR-118-219.

ALL COSTS ASSOCIATED WITH THE INTERCONNECTED PORTABLE BARRIER RAIL SHALL BE INCLUDED IN ITEM NO. 712-02.02, INTERCONNECTED PORTABLE BARRIER RAIL, L.F.

COST OF FORMING, HIGH EARLY STRENGTH CONCRETE, REINFORCING STEEL TO CONSTRUCT THE NEW BRIDGE RAIL TO BE INCLUDED UNDER ITEM NO. 620-06, CONCRETE RAILING, L.F. FOR NOTES AND DETAILS REGARDING NEW CONCRETE BRIDGE RAIL, SEE DWG. NO. BR-118-218.

FOR ADDITIONAL NOTES AND DETAILS REGARDING NEW 7" CONCRETE DECK, SEE DWG. NO. BR-118-212.

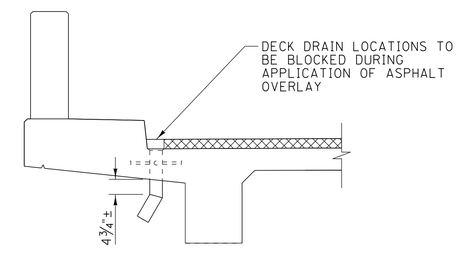

DETAIL A
SCALE: ½" = 1'-0"

27.25

STATE OF TENNESSEE
DEPARTMENT OF TRANSPORTATION

BRIDGE REPAIR DETAILS

SR14 OVER OVERFLOW
BRIDGE NO. 79-SR14-27.25

SHELBY COUNTY
2015

AMJAD S. KHAIRI
REGISTERED ENGINEER
AGRICULTURE
COMMERCE
NO. 106850
STATE OF TENNESSEE
04/27/15

GARVER

DESIGNED BY	J. L. HALBROOK	DATE	APR 2015
DRAWN BY	C. J. HALBROOK	DATE	APR 2015
SUPERVISED BY	J. H. RUDDELL	DATE	APR 2015
CHECKED BY	A. J. KHAIRI	DATE	APR 2015

TN D.O.T. ENGINEERING SUPERVISOR M. LAWSON

JLHalbrook 4/27/2015 10:41:14 AM
WORKSPACE: TDOT Bridge
L:\2015\5007002 - Repair Five Bridges Shelby County\Drawings\BRG\03 - Final\BR-118-209.dgn

BR-118-209