LIST OF DRAWINGS

DWG. NO.	REVISION	DRAWING
BR-118-187		LAYOUT OF BRIDGE TO BE REPAIRED (26.90)
BR-118-188		LAYOUT OF BRIDGE TO BE REPAIRED (26.90)
BR-118-189		LAYOUT OF BRIDGE TO BE REPAIRED (26.90)
BR-118-191		ESTIMATED QUANTITIES
BR-118-192		GENERAL NOTES
BR-118-202		BRIDGE REPAIR DETAILS
BR-118-203		BRIDGE REPAIR DETAILS
BR-118-204		BRIDGE REPAIR DETAILS
BR-118-205		BRIDGE REPAIR DETAILS
BR-118-206		BRIDGE REPAIR DETAILS
BR-118-207		BRIDGE REPAIR DETAILS
BR-118-217		BRIDGE REPAIR DETAILS
BR-118-218A		BRIDGE REPAIR DETAILS
BR-118-219		BRIDGE REPAIR DETAILS

LIST OF REFERENCE DRAWINGS

DWG. NO.	DRAWING
E-9-112	LAYOUT OF BRIDGE
E-9-113	HANDRAIL
E-9-114	SPAN NOS. 10 & 16
E-9-115	BENTS NO. 9 & NO. 12
E-9-116	BENTS 10 & 11
E-9-117	PIERS NO. 1-4
E-2-87	STANDARD CONCRETE HANDRAIL
E-8-91	STANDARD CONCRETE BRIDGE
E-8-100	STANDARD CONCRETE BRIDGE
E-8-106	STANDARD CONTINUOUS BRIDGE
E-8-107	STANDARD CONTINUOUS BRIDGE
E-8-108	STANDARD CONCRETE BENT AND ABUTMENT
E-8-110	STANDARD SLAB DETAILS
A-0-12	STANDARD CONCRETE PIERS

ALL REFERENCE DRAWINGS TO BE PRINTED WITH THE PLANS

ENVIRONMENTAL NOTE

THE CONTRACTOR SHALL USE ANY MEASURE NECESSARY TO ENSURE THAT THE REMAINING WETLAND WILL NOT BE DISTURBED AND IS PROTECTED FROM SEDIMENT AND OTHER POLLUTANTS.

PROJECT NO.	YEAR	SHEET NO.
79224-4205-04	2015	

REVISIONS

NO.	DATE	BY	BRIEF DESCRIPTION

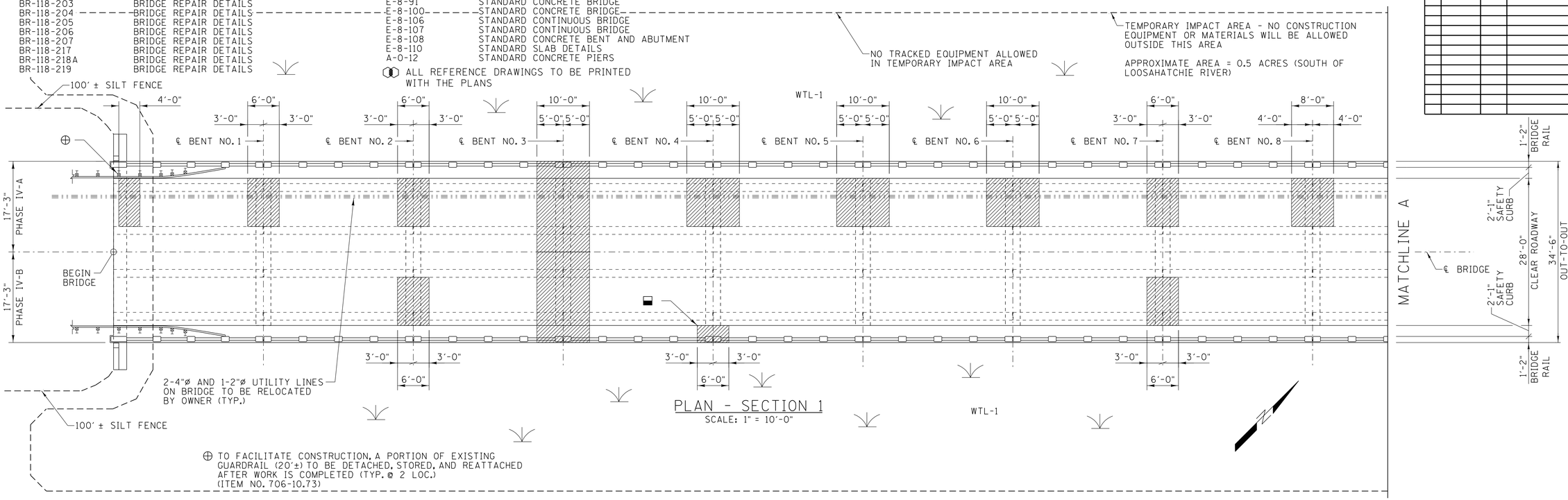

PLAN - SECTION 1

SCALE: 1" = 10'-0"

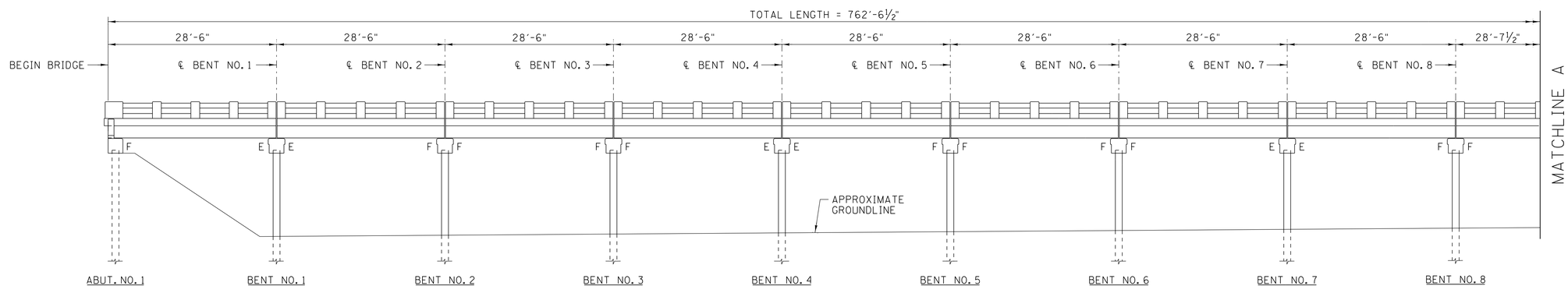

ELEVATION - SECTION 1

SCALE: 1" = 10'-0"

LEGEND

F: DENOTES FIXED END
E: DENOTES EXPANSION END

26.90

SCOPE OF WORK

REMOVE 3"± EXISTING ASPHALT OVERLAY AT DESIGNATED LOCATIONS. FOR NOTES AND DETAILS, SEE DWG. NOS. BR-118-202 THRU BR-118-206.

REMOVE DECK AND CANTILEVER AT BENT NO. 3. FOR NOTES AND DETAILS, SEE DWG. NOS. BR-118-204 AND BR-118-205.

REMOVE CANTILEVER AT BENT NO. 4. FOR NOTES AND DETAILS, SEE DWG. NOS. BR-118-202 AND BR-118-206.

REMOVE DETERIORATED PORTIONS OF SLAB AND DIAPHRAGMS AT DESIGNATED LOCATIONS. FOR NOTES AND DETAILS, SEE DWG. NOS. BR-118-202 THRU BR-118-205.

PROVIDE TIMBER SUPPORTS UNDERNEATH SLAB FOR SPANS 12 THRU 14. FOR NOTES AND DETAILS, SEE DWG. NO. BR-118-207.

PROVIDE DETAILS TO REPLACE DIAPHRAGMS AT REPAIR LOCATIONS. FOR NOTES AND DETAILS, SEE DWG. NOS. BR-118-202 THRU BR-118-205.

PROVIDE FULL DEPTH REPAIR AT DESIGNATED LOCATIONS. FOR NOTES AND DETAILS, SEE DWG. NO. BR-118-217.

PROVIDE NEW ASPHALT OVERLAY AT DESIGNATED LOCATIONS. FOR NOTES AND DETAILS, SEE DWG. NO. BR-118-219.

PROVIDE NEW CONCRETE END POSTS AT BENT NOS. 3 & 4. FOR NOTES AND DETAILS, SEE DWG. NO. BR-118-218.

REMOVE AND REATTACH THE GUARDRAIL AT BOTH ENDS OF THE BRIDGE IN ORDER EASE CONSTRUCTION AT THE ABUTMENTS. FOR ADDITIONAL NOTES, SEE DWG. NO. BR-118-191.

PROVIDE TRAFFIC CONTROL USING CONCRETE BARRIER RAIL AND SIGNAL LIGHTS. KEEP ONE TRAFFIC LANE OPEN AT ALL TIMES. FOR NOTES AND DETAILS, SEE SHEET NOS. 9, 10, AND 12.

GARVER

DESIGNED BY	L. I. COBOS	DATE	APR 2015
DRAWN BY	C. W. THOMAS	DATE	APR 2015
SUPERVISED BY	J. H. RUDDELL	DATE	APR 2015
CHECKED BY	A. J. KHAIRI	DATE	APR 2015

TN D.O.T. ENGINEERING SUPERVISOR M. LAWSON

AMJAD S. KHAIRI
REGISTERED ENGINEER
AGRICULTURE
COMMERCE
No. 106650
STATE OF TENNESSEE
4/27/15

STATE OF TENNESSEE
DEPARTMENT OF TRANSPORTATION

BRIDGE REPAIR DETAILS

SR14 OVER LOOSAHATCHIE RIVER
BRIDGE NO. 79-SR14-26.90

SHELBY COUNTY
2015

BR-118-187

JLHolbrook 4/27/2015 10:41:02 AM
WORKSPACE:\ TDOT Bridge Five Bridges Shelby County\Drawings\BR0\03 - Final\BR-118-187.dgn
L:\2015\1507002 - Repair