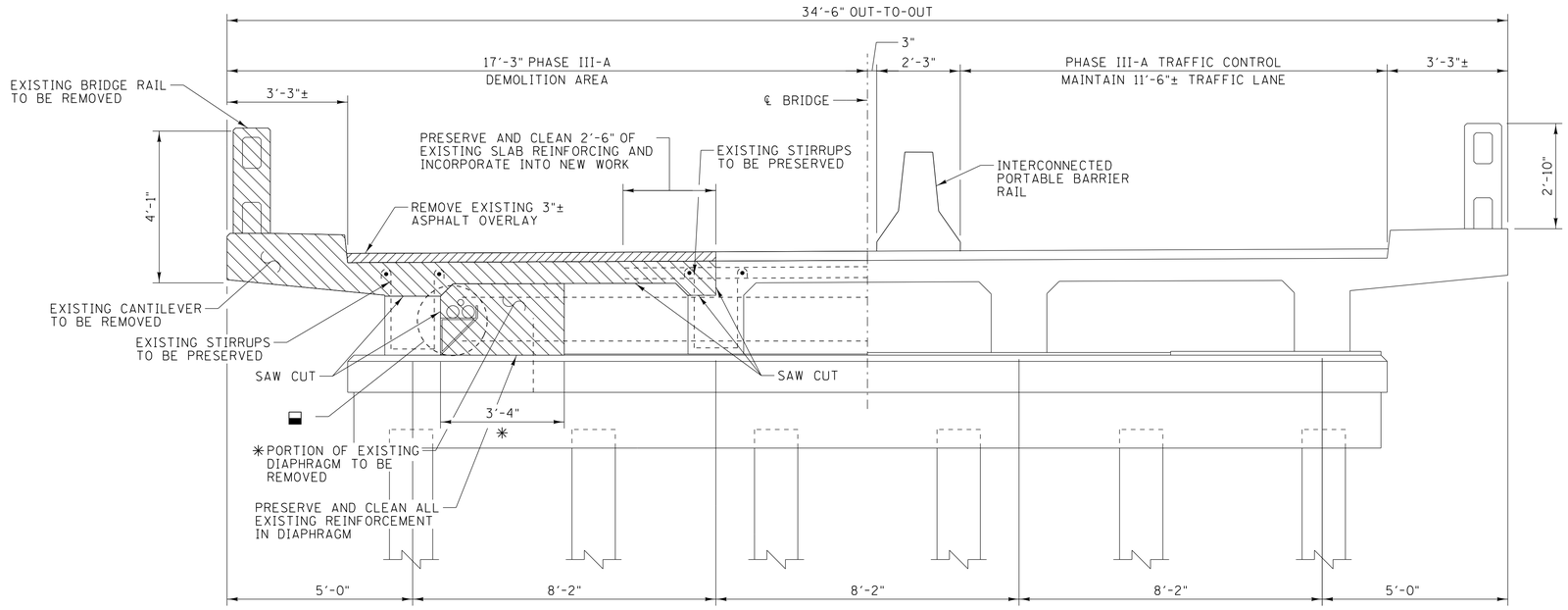

PHASE III-A: DEMOLITION

(TYP. SPAN NO. 8)
SCALE: ½" = 1'-0"

NOTE:

ALL DIAPHRAGM REINFORCEMENT TO BE PRESERVED, CLEANED, AND INCORPORATED INTO NEW WORK.

NOTE:

FOR DETAIL A, SEE DWG. NO. BR-118-195.

PROJECT NO.	YEAR	SHEET NO.
79224-4205-04	2015	

REVISIONS

NO.	DATE	BY	BRIEF DESCRIPTION

- 2-4"ø UTILITY LINES AND 1-2"ø UTILITY LINE TO BE RELOCATED BY OWNER OF UTILITIES
- CONCRETE AREA TO BE REMOVED
- ASPHALT AREA TO BE REMOVED
- ✳ EXACT LIMITS OF REMOVAL TO BE DETERMINED BY TDOT ENGINEER IN FIELD
- ✳✳ MATCH EXISTING SLOPE
- BEND IN FIELD AS NEEDED

NOTE:

FOR ADDITIONAL NOTES, SEE DWG. NO. BR-118-195.

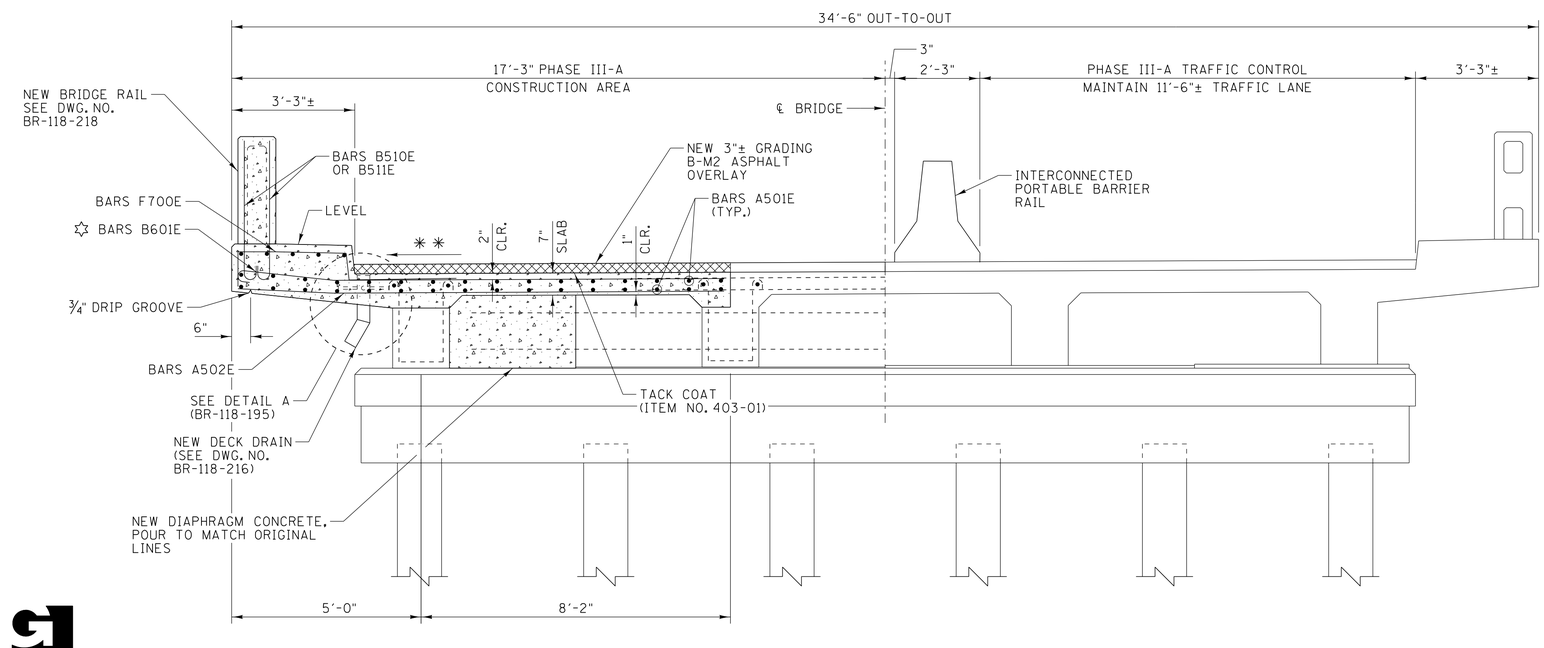

PHASE III-A: CONSTRUCTION

(TYP. SPAN NO. 8)
SCALE: ½" = 1'-0"

26.74

STATE OF TENNESSEE
DEPARTMENT OF TRANSPORTATION

BRIDGE REPAIR DETAILS

SR14 OVER OVERFLOW
BRIDGE NO. 79-SR14-26.74

SHELBY COUNTY
2015

AMJAD S. KHAIRI
REGISTERED ENGINEER
AGRICULTURE
COMMERCE
NO. 106650
STATE OF TENNESSEE
04/27/15

GARVER

DESIGNED BY J. L. HALBROOK DATE APR 2015
DRAWN BY C. J. HALBROOK DATE APR 2015
SUPERVISED BY J. H. RUDDELL DATE APR 2015
CHECKED BY A. J. KHAIRI DATE APR 2015

TN D.O.T. ENGINEERING SUPERVISOR M. LAWSON

BR-118-199

JLHalbrook 4/27/2015 10:41:08 AM
WORKSPACE: TDOT Bridge
L:\2015\150170\02 - Repair Five Bridges Shelby County\Drawings\BR\03 - Final\BR-118-199.dgn