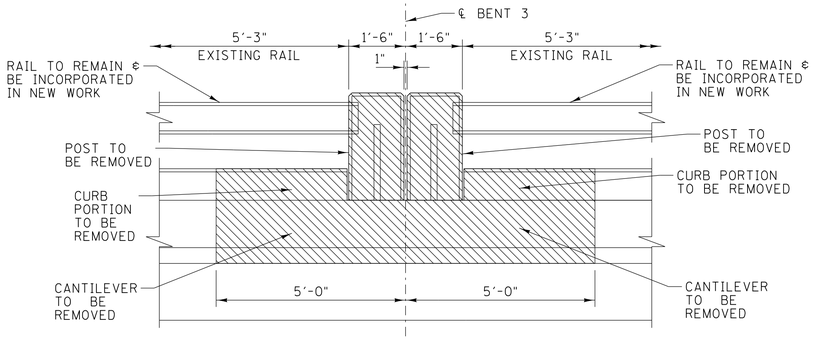

ELEVATION: PART CANTILEVER DEMOLITION

(SHOWN FOR BENT NO. 3)
SCALE: ½" = 1'-0"

NOTES:

THE COST OF LABOR, EQUIPMENT AND CONCRETE FOR PLACEMENT OF NEW BRIDGE RAIL POSTS & CURBS AT BENT 4, BRIDGE NO. 79-SR14-26.90 SHALL BE INCLUDED IN ITEM NO. 620-06, CONCRETE RAILING, L.F.

COST OF REINFORCING STEEL SHALL BE PAID FOR UNDER ITEM 604-10.18, REINFORCING STEEL (REPAIRS), LB.

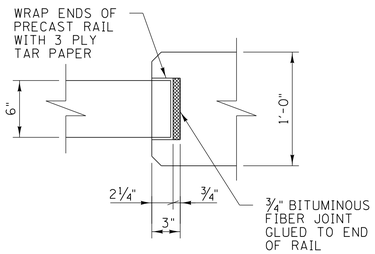

DETAIL E

(PLAN VIEW)
SCALE: 1½" = 1'-0"

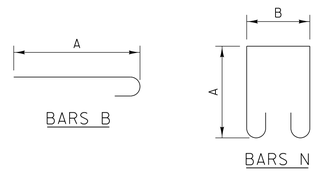

BILL OF STEEL						
BRIDGE RAIL POST & CURB REINFORCEMENT BENT 3 (26.90)						
BARS	SIZE	NO. REQ'D	BENDING DIMENSIONS			LENGTH
			A	B	C	
A410E	4	4				3'-3"
A411	4	4				2'-0"
B510E	5	6	3'-8"			4'-3"
LS410E	4	6	1'-2"	9"		4'-9"
N410E	4	8	1'-8"	4"		4'-8"

NOTES:

ALL BAR DIMENSIONS ARE OUT-TO-OUT.

ALL DIMENSIONS SHALL BE FIELD VERIFIED BY CONTRACTOR PRIOR TO FABRICATION.

BARS ENDING IN "E" TO BE EPOXY COATED.

"NO. REQ'D" SHOWN FOR ONE REPAIR LOCATION, TWO (2) LOCATIONS REQUIRED.

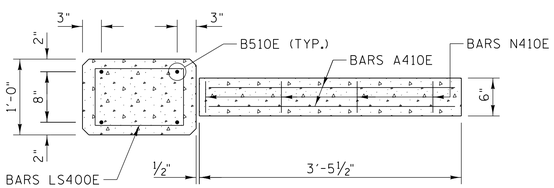

SECTION A-A: CONSTRUCTION

SCALE: 1" = 1'-0"

26.90

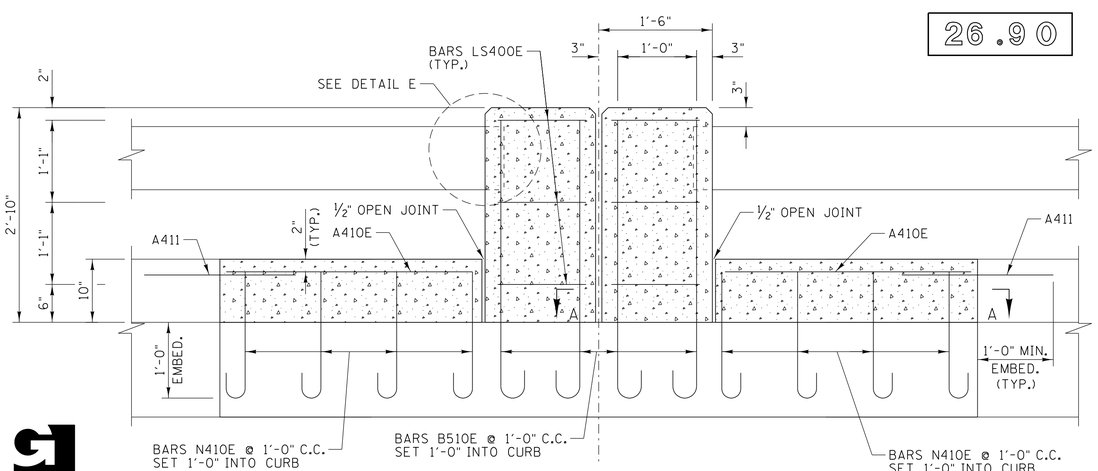

PART ELEVATION: CONSTRUCTION

SCALE: 1" = 1'-0"

GARVER

DESIGNED BY	J. L. HALBROOK	DATE	APR 2015
DRAWN BY	C. W. THOMAS	DATE	APR 2015
SUPERVISED BY	J. H. RUDDELL	DATE	APR 2015
CHECKED BY	A. J. KHAIRI	DATE	APR 2015

TN D.O.T. ENGINEERING SUPERVISOR M. LAWSON

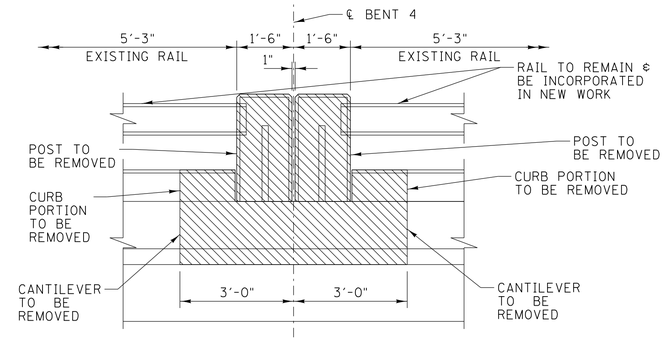

ELEVATION: PART CANTILEVER DEMOLITION

(SHOWN FOR BENT NO. 4)
SCALE: ½" = 1'-0"

PROJECT NO.	YEAR	SHEET NO.
79224-4205-04	2015	

REVISIONS

NO.	DATE	BY	BRIEF DESCRIPTION

26.90

NOTES:

THE COST OF LABOR, EQUIPMENT AND CONCRETE FOR PLACEMENT OF NEW BRIDGE RAIL POSTS & CURBS AT BENT 4, BRIDGE NO. 79-SR14-26.90 SHALL BE INCLUDED IN ITEM NO. 620-06, CONCRETE RAILING, L.F.

COST OF REINFORCING STEEL SHALL BE PAID FOR UNDER ITEM 604-10.18, REINFORCING STEEL (REPAIRS), LB.

FOR DETAIL E, SEE THIS DWG.

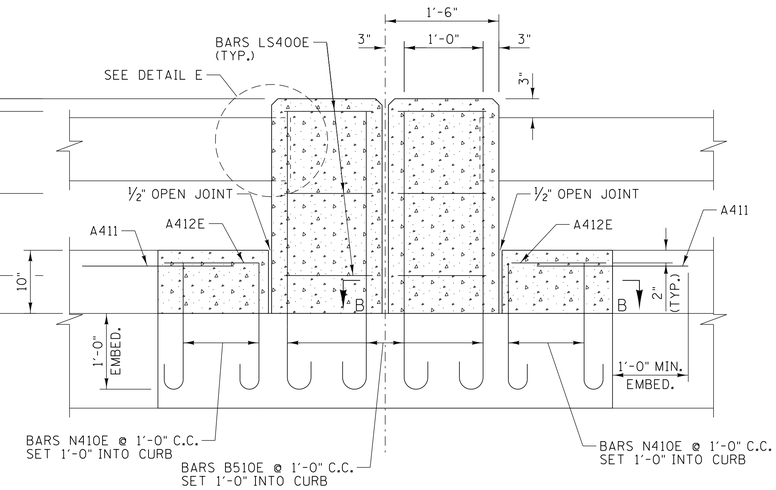

PART ELEVATION: CONSTRUCTION

SCALE: 1" = 1'-0"

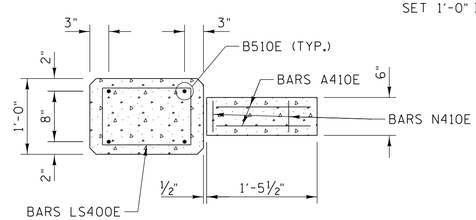

SECTION B-B: CONSTRUCTION

SCALE: 1" = 1'-0"

BILL OF STEEL						
BRIDGE RAIL POST & CURB REINFORCEMENT BENT 4 (26.90)						
BARS	SIZE	NO. REQ'D	BENDING DIMENSIONS			LENGTH
			A	B	C	
A411	4	4				2'-0"
A412E	4	4				1'-3"
B510E	5	6	3'-8"			4'-3"
LS410E	4	6	1'-2"	9"		4'-9"
N410E	4	4	1'-8"	4"		4'-8"

NOTES:

ALL BAR DIMENSIONS ARE OUT-TO-OUT.

ALL DIMENSIONS SHALL BE FIELD VERIFIED BY CONTRACTOR PRIOR TO FABRICATION.

BARS ENDING IN "E" TO BE EPOXY COATED.

STATE OF TENNESSEE
DEPARTMENT OF TRANSPORTATION

BRIDGE REPAIR DETAILS

SR14 OVER LOOSAHATCHIE RIVER
BRIDGE NO. 79-SR14-26.90

SHELBY COUNTY
2015

AMJAD S. KHAIRI
REGISTERED ENGINEER
AGRICULTURE
NO. COMMERCE
106650
STATE OF TENNESSEE
04/27/15

BR-118-218A

JLHolbrook 4/27/2015 10:41:24 AM
WORKSPACE: TDOT Bridge
L:\2015\150170002 - Repair Five Bridges Shelby County\Drawings\BRG\03 - Final\BR-118-218A.dgn