PROJECT NO.	YEAR	SHEET NO.
79224-4205-04	2015	

REVISIONS

NO.	DATE	BY	BRIEF DESCRIPTION

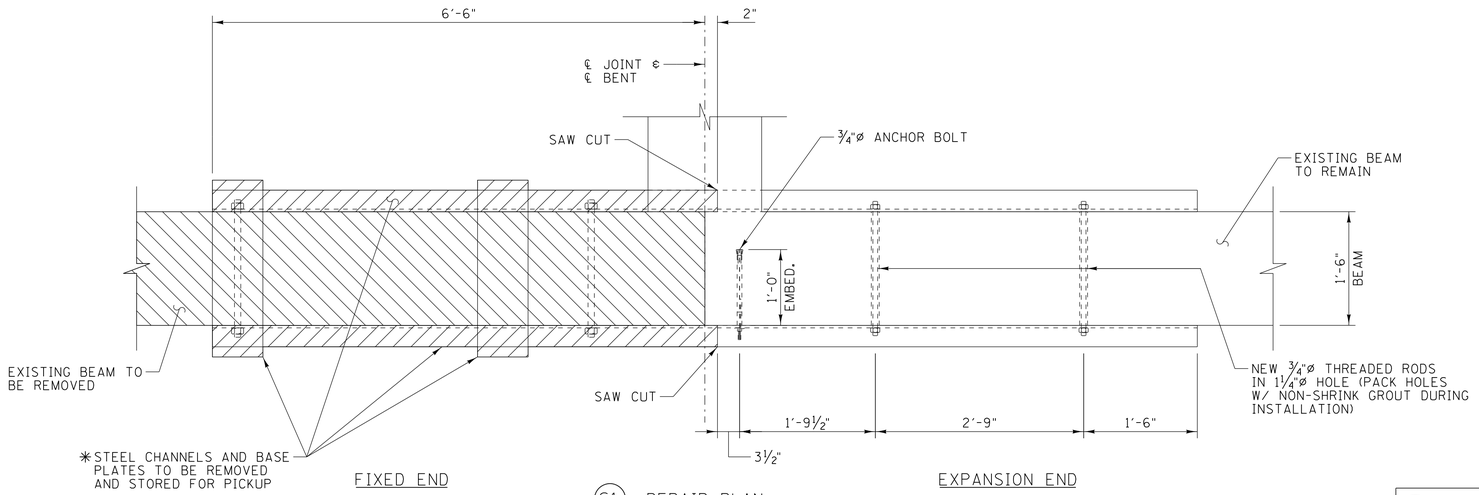

S1 REPAIR: PLAN
SCALE: 1" = 1'-0"

✳ CONTRACTOR SHALL REMOVE A PORTION OF THE DESIGNATED STEEL CHANNEL BEAM SADDLES, THREADED RODS, NUTS, BOLTS, AND BASE PLATES INTACT AND STOCKPILE ON SITE FOR PICKUP BY TDOT PERSONNEL. THE TDOT ENGINEER WILL CHOOSE WHICH STEEL MATERIALS WILL BE SELECTED FOR REUSE ON OTHER TDOT REPAIR PROJECTS AND THE REMAINING MATERIAL WILL BE DISPOSED OF BY THE CONTRACTOR. FOR QUESTIONS CONCERNING THE EXISTING STEEL SADDLE ASSEMBLIES, CONTACT STAN REYNOLDS AT (731) 935-0247.

CONCRETE TO BE REMOVED

STEEL TO BE REMOVED AND SALVAGED

S1 STEEL BEAM SADDLE REPAIR SCHEDULE

BRIDGE NO.	BENT NO.	LOCATION
26.74	8	NORTH SIDE
26.74	8	SOUTH SIDE
27.25	3	NORTH SIDE

SEQUENCE OF CONSTRUCTION

1. INSTALL NEW ¾"ø ANCHOR BOLTS AND THREADED RODS AT THE LOCATIONS SHOWN IN THE EXPANSION END OF THE STEEL BEAM SADDLE.

2. REMOVE THE CONCRETE DIAPHRAGM PER INSTRUCTION ON DWG. NOS. BR-118-200, BR-118-201, AND BR-118-210.

3. CUT THE STEEL CHANNELS ON BOTH SIDES OF THE EXISTING CONCRETE BEAM, TWO (2) INCHES PASSED THE CENTERLINE OF THE JOINT.

4. REMOVE THE STEEL CHANNELS, THREADED RODS, BASE PLATES, NUTS, AND BOLTS FROM THE FIXED SIDE OF THE STEEL BEAM SADDLE REPAIR AREAS AND STORE FOR PICKUP.

5. REMOVE THE EXISTING BEAM FROM THE FIXED END PER THE INSTRUCTIONS ON DWG. NOS. BR-118-200, BR-118-201, AND BR-118-210.

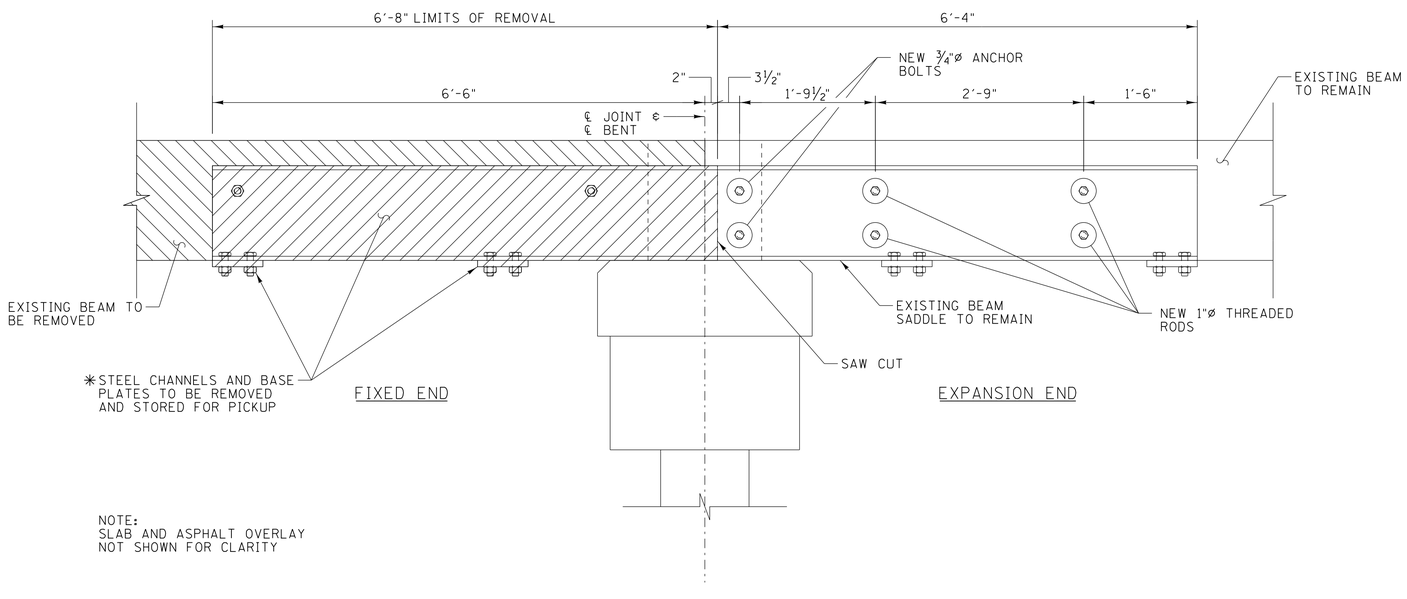

NOTE:
SLAB AND ASPHALT OVERLAY
NOT SHOWN FOR CLARITY

S1 REPAIR: ELEVATION
SCALE: 1" = 1'-0"

NOTE:.

ALL COSTS ASSOCIATED WITH THE REMOVAL OF A PORTION OF THE STEEL BEAM SADDLE ASSEMBLIES SHALL BE PAID FOR UNDER ITEM NO. 604-10.91, MISCELLANEOUS BRIDGE ITEMS (SADDLE REPAIR), LS.

FOR NOTES AND DETAILS REGARDING THE REMOVAL OF THE CONCRETE DIAPHRAGMS, SEE DWG. NOS. BR-118-200, BR-118-201, AND BR-118-210.

FOR ADDITIONAL NOTES AND DETAILS REGARDING THE ¾"ø ANCHOR BOLTS, SEE DWG. NO. BR-118-216.

FOR REPAIR LOCATIONS, SEE DWG. NOS. BR-118-186 AND BR-118-190.

26.74

27.25

STATE OF TENNESSEE
DEPARTMENT OF TRANSPORTATION

BRIDGE REPAIR DETAILS

SR14 OVER OVERFLOW
BRIDGE NO. 79-SR14-26.74
BRIDGE NO. 79-SR14-27.25

SHELBY COUNTY
2015

AMJAD S. KHAIRI
REGISTERED ENGINEER
AGRICULTURE
COMMERCE
NO. 106650
STATE OF TENNESSEE
04/27/15

GARVER

DESIGNED BY	L. I. COBOS	DATE	APR 2015
DRAWN BY	C. W. THOMAS	DATE	APR 2015
SUPERVISED BY	J. H. RUDDELL	DATE	APR 2015
CHECKED BY	A. J. KHAIRI	DATE	APR 2015

TN D.O.T. ENGINEERING SUPERVISOR M. LAWSON

BR-118-215

JLHalbrook 4/27/2015 10:41:17 AM
WORKSPACE: TDOT Bridge
L:\2015\1507002 - Repair Five Bridges Shelby County\Drawings\BRG\03 - Final\BR-118-215.dgn