PROJECT NO.	YEAR	SHEET NO.
79224-4205-04	2015	

REVISIONS

NO.	DATE	BY	BRIEF DESCRIPTION

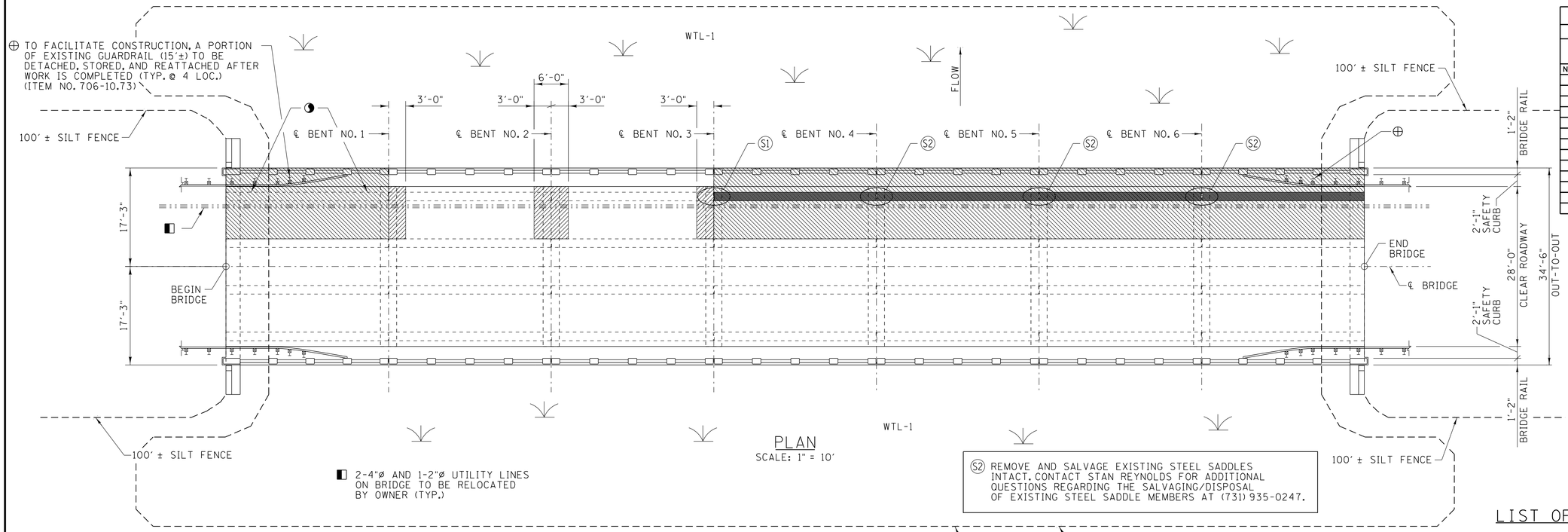

PLAN

SCALE: 1" = 10'

2-4"ø AND 1-2"ø UTILITY LINES ON BRIDGE TO BE RELOCATED BY OWNER (TYP.)

(S2) REMOVE AND SALVAGE EXISTING STEEL SADDLES INTACT. CONTACT STAN REYNOLDS FOR ADDITIONAL QUESTIONS REGARDING THE SALVAGING/DISPOSAL OF EXISTING STEEL SADDLE MEMBERS AT (731) 935-0247.

ENVIRONMENTAL NOTE

THE CONTRACTOR SHALL USE ANY MEASURE NECESSARY TO ENSURE THAT THE REMAINING WETLAND WILL NOT BE DISTURBED AND IS PROTECTED FROM SEDIMENT AND OTHER POLLUTANTS.

TEMPORARY IMPACT AREA - NO CONSTRUCTION EQUIPMENT OR MATERIALS WILL BE ALLOWED OUTSIDE THIS AREA

APPROXIMATE AREA = 0.4 ACRES

NO TRACKED EQUIPMENT ALLOWED IN TEMPORARY IMPACT AREA

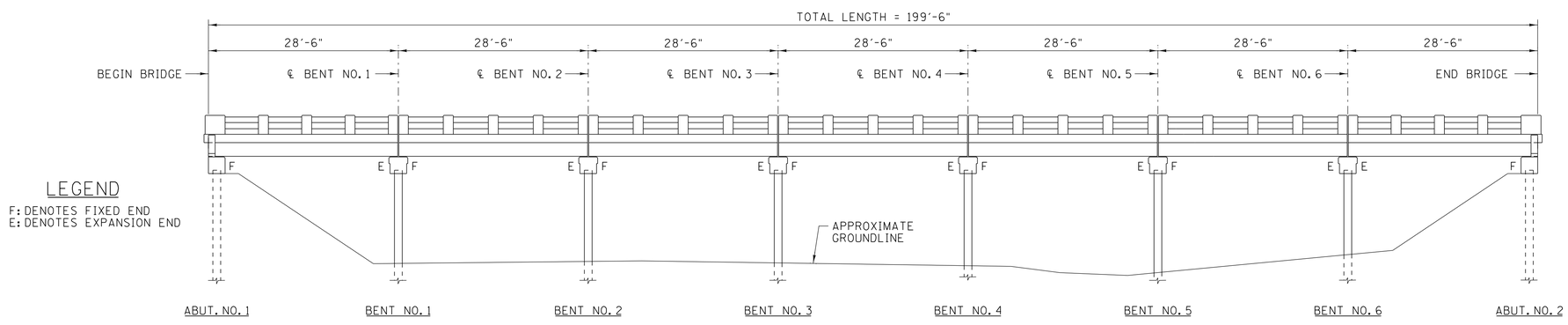

ELEVATION

SCALE: 1" = 10'

LEGEND

F: DENOTES FIXED END
E: DENOTES EXPANSION END

PROVIDE TEMPORARY BRACING AT FIELD DESIGNATED LOCATIONS. FOR NOTES AND DETAILS, SEE DWG. NO. 213.

LIST OF DRAWINGS

DWG. NO.	REVISION	DRAWING
BR-118-190		LAYOUT OF BRIDGE TO BE REPAIRED (27.25)
BR-118-191		ESTIMATED QUANTITIES
BR-118-192		GENERAL NOTES
BR-118-208		BRIDGE REPAIR DETAILS
BR-118-209		BRIDGE REPAIR DETAILS
BR-118-210		BRIDGE REPAIR DETAILS
BR-118-212		BRIDGE REPAIR DETAILS
BR-118-213		BRIDGE REPAIR DETAILS
BR-118-214		BRIDGE REPAIR DETAILS
BR-118-215		BRIDGE REPAIR DETAILS
BR-118-216		BRIDGE REPAIR DETAILS
BR-118-217		BRIDGE REPAIR DETAILS
BR-118-218		BRIDGE REPAIR DETAILS
BR-118-219		BRIDGE REPAIR DETAILS

LIST OF REFERENCE DRAWINGS

DWG. NO.	DRAWING
E-9-118	LAYOUT OF BRIDGE
E-8-91	STANDARD CONCRETE BRIDGE
E-8-108	STANDARD CONCRETE BENT AND ABUTMENT
E-2-87	STANDARD CONCRETE HANDRAIL

ALL REFERENCE DRAWINGS TO BE PRINTED WITH THE PLANS

27.25

SCOPE OF WORK

- REMOVE 3"± EXISTING ASPHALT OVERLAY AT DESIGNATED LOCATIONS. FOR NOTES AND DETAILS, SEE DWG. NOS. BR-118-208 THRU BR-118-210.
- REMOVE PORTION OF DECK AND CANTILEVER AT SPAN NO. 1. FOR NOTES AND DETAILS, SEE DWG. NO. BR-118-209.
- REMOVE PORTION OF DECK, CANTILEVER, AND EXTERIOR BEAM AT SPAN NOS. 4-7. FOR NOTES AND DETAILS, SEE DWG. NO. BR-118-210.
- REMOVE DETERIORATED PORTIONS OF SLAB AND DIAPHRAGMS AT DESIGNATED LOCATIONS. FOR NOTES AND DETAILS, SEE DWG. NO. BR-118-208.
- PROVIDE FOUR (4) NEW 21"X36" BOX BEAMS AND BEARING PADS AT SPAN NOS. 4-7. FOR NOTES AND DETAILS, SEE DWG. NOS. BR-118-210 AND BR-118-214.
- PROVIDE DETAILS TO REPLACE DIAPHRAGMS AT REPAIR LOCATIONS. FOR NOTES AND DETAILS, SEE DWG. NO. BR-118-213.
- PROVIDE FULL DEPTH REPAIR AT DESIGNATED LOCATIONS. FOR NOTES AND DETAILS, SEE DWG. NO. BR-118-217.
- PROVIDE NEW ASPHALT OVERLAY AT DESIGNATED LOCATIONS. FOR NOTES AND DETAILS, SEE DWG. NO. BR-118-219.
- (S1)(S2) MODIFY AND SALVAGE EXISTING STEEL SADDLES. FOR ADDITIONAL NOTES AND DETAILS, SEE DWG. NO. BR-118-215.
- REMOVE AND REATTACH THE GUARDRAIL AT BOTH ENDS OF THE BRIDGE IN ORDER EASE CONSTRUCTION AT THE ABUTMENTS. FOR ADDITIONAL NOTES, SEE DWG. NO. BR-118-191.
- PROVIDE NEW SOLID SECTION PARAPETS AT SPAN NOS. 1 & 4-7. FOR NOTES AND DETAILS, SEE DWG. NO. BR-118-218.
- PROVIDE TRAFFIC CONTROL USING CONCRETE BARRIER RAIL AND SIGNAL LIGHTS. KEEP ONE TRAFFIC LANE OPEN AT ALL TIMES. FOR NOTES AND DETAILS, SEE SHEET NOS. 11 AND 12.

GARVER

DESIGNED BY	L. I. COBOS	DATE	APR 2015
DRAWN BY	C. W. THOMAS	DATE	APR 2015
SUPERVISED BY	J. H. RUDDELL	DATE	APR 2015
CHECKED BY	A. J. KHAIRI	DATE	APR 2015

TN D.O.T. ENGINEERING SUPERVISOR M. LAWSON

STATE OF TENNESSEE
DEPARTMENT OF TRANSPORTATION

BRIDGE REPAIR DETAILS

SR14 OVER OVERFLOW
BRIDGE NO. 79-SR14-27.25

SHELBY COUNTY
2015

AMJAD S. KHAIRI REGISTERED ENGINEER AGRICULTURE COMMERCE No. 106650 STATE OF TENNESSEE 04/27/15

BR-118-190

JLHalbrook 4/27/2015 10:44:03 AM
WORKSPACE: TDOT Bridge Five Bridges Shelby County\Drawings\BRGV03 - Final\BR-118-190.dgn
LY:2015\150170\02 - Repair