PROJECT NO.	YEAR	SHEET NO.
79224-4205-04	2015	

REVISIONS

NO.	DATE	BY	BRIEF DESCRIPTION

2-4"ø UTILITY LINES AND 1-2"ø UTILITY LINE TO BE RELOCATED BY OWNER OF UTILITIES

CONCRETE AREA TO BE REMOVED

ASPHALT AREA TO BE REMOVED

✱✱ MATCH EXISTING SLOPE

✡ BEND IN FIELD AS NEEDED

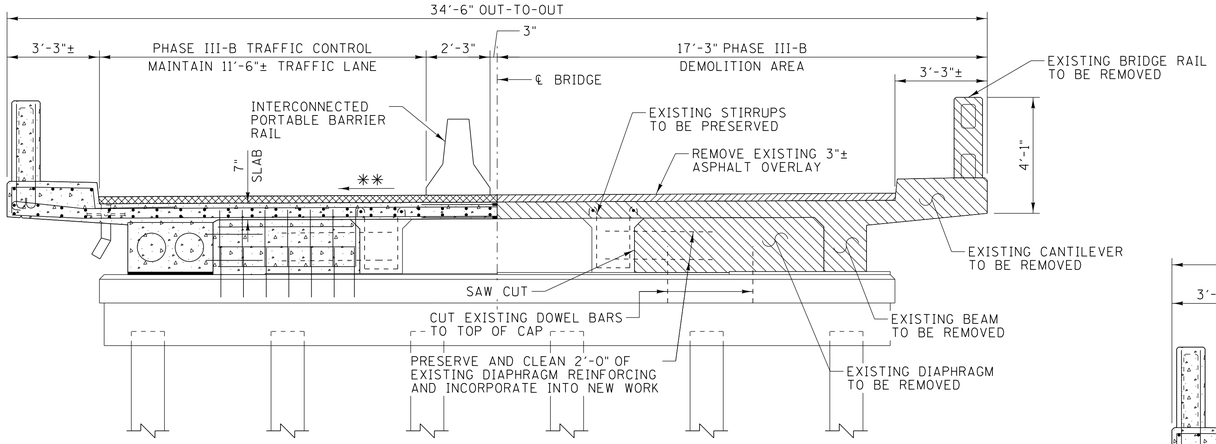

PHASE III-B: DEMOLITION

(TYP. SPAN NO. 9)
TYP. FIXED DIAPHRAGM
SCALE: 3/8" = 1'-0"

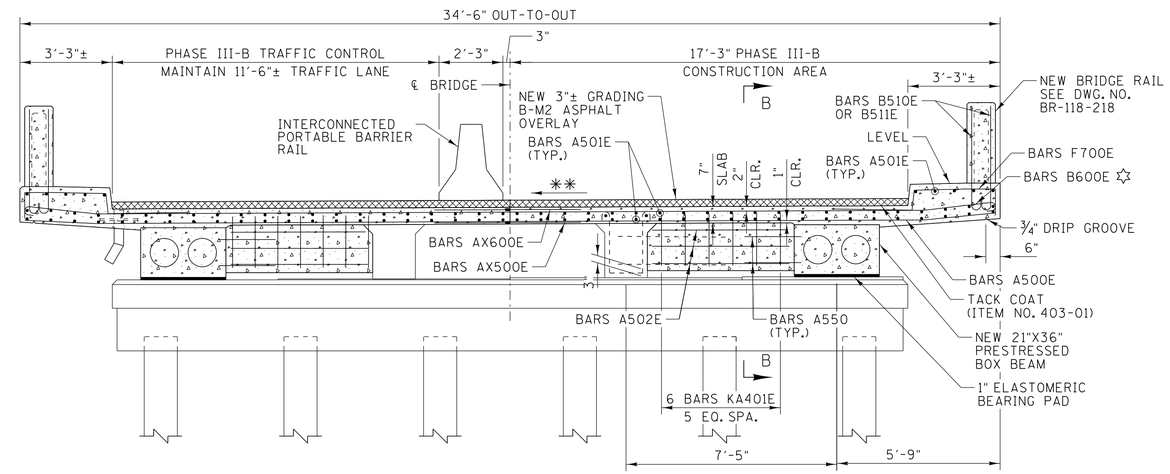

PHASE III-B: CONSTRUCTION

(TYP. SPAN NO. 9)
TYP. EXPANSION DIAPHRAGM
SCALE: 3/8" = 1'-0"

NOTE:

FOR SECTION A-A AND SECTION B-B, SEE DWG. NO. BR-118-213.

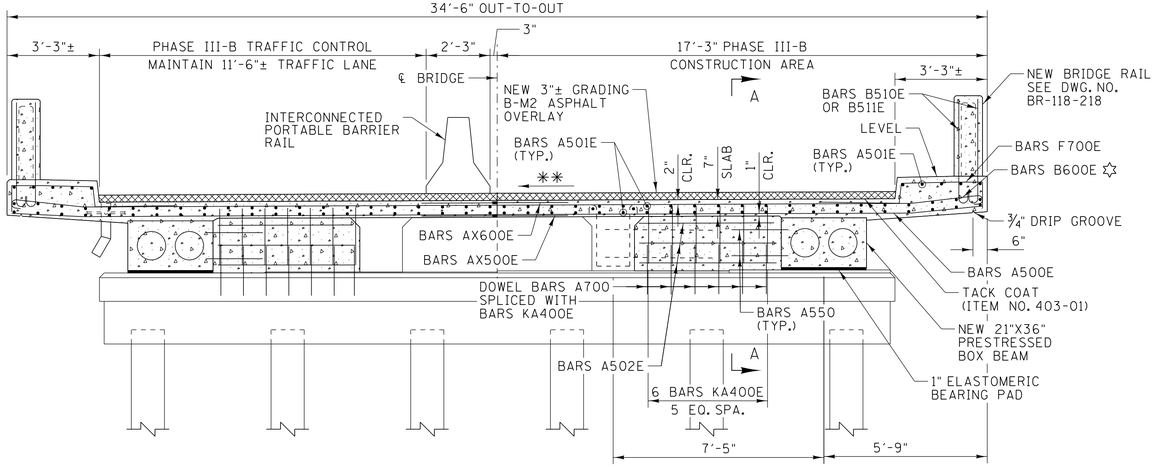

PHASE III-B: CONSTRUCTION

(TYP. SPAN NO. 9)
TYP. FIXED DIAPHRAGM
SCALE: 3/8" = 1'-0"

NOTES:

FOR ADDITIONAL NOTES AND DETAILS, SEE DWG. NO. BR-118-200.

26.74

STATE OF TENNESSEE
DEPARTMENT OF TRANSPORTATION

BRIDGE REPAIR DETAILS

SR14 OVER OVERFLOW
BRIDGE NO. 79-SR14-26.74

SHELBY COUNTY
2015

AMJAD S. KHAIRI
REGISTERED ENGINEER
AGRICULTURE
COMMERCE
No. 106650
STATE OF TENNESSEE
04/27/15

GARVER

DESIGNED BY	J. L. HALBROOK	DATE	APR 2015
DRAWN BY	C. J. HALBROOK	DATE	APR 2015
SUPERVISED BY	J. H. RUDDELL	DATE	APR 2015
CHECKED BY	A. J. KHAIRI	DATE	APR 2015

TN D.O.T. ENGINEERING SUPERVISOR M. LAWSON

JLHalbrook 4/27/2015 10:41:09 AM
WORKSPACE: TDOT Bridge Five Bridges Shelby County\Drawings\BRG\03 - Final\BR-118-201.dgn
L:\2015\15017002 - Repair