NOTES:

ENTIRE DEPTH OF JOINT SHALL BE CLEANED BY A HIGH PRESSURE WATER WASH CAPABLE OF REMOVING ALL INCOMPRESSIBLE AND FOREIGN MATERIAL.

COST OF JOINT CLEANING BY HIGH PRESSURE WATER, INSTALLATION OF EXPANSION JOINT, BACKER ROD, JOINT SEALANT, LABOR, AND ANY MISCELLANEOUS MATERIALS NECESSARY TO INSTALL THE NEW EXPANSION JOINT SHALL BE PAID FOR UNDER ITEM NO. 604-10.44, EXPANSION JOINT REPAIRS, L.F. THE REPAIRS SHALL BE COMPLETED FOR THE INDICATED WIDTH OF THE BRIDGE AT LOCATIONS SHOWN ON DWG. NOS. BR-118-184 THRU BR-118-190.

FOR ADDITIONAL NOTES AND DETAILS REGARDING NEW ASPHALT OVERLAY, SEE DWG. NO. BR-118-219.

EXPANSION JOINT REPAIR SCHEDULE			
BR. NO.	PHASE	LOCATION	LENGTH PER LOCATION
26.28	I-A	ABUT. NOS. 1 & 2 & BENT NOS. 1-4	9'-11"
26.58	II-A	ABUT. NOS. 1 & 2 & BENT NOS. 1-6	9'-11"
* 26.74	III-A & B	ABUT. NOS. 1 & 2 & BENT NOS. 1 & 8	34'-6"
26.74	III-A	BENT NOS. 2, 3, 5 & 6	9'-11"
26.74	III-B	BENT NOS. 2, 3 & 5	9'-11"
* 26.74	III-A	BENT NO. 7	13'-2"
26.90	IV-A	ABUT. NO. 1 & BENT NOS. 1, 2, 4-9	9'-11"
26.90	IV-B	BENT NOS. 2 & 7	9'-11"
* 26.90	IV-A & B	BENT NO. 3	34'-6"
* 26.90	IV-B	BENT NO. 4	3'-3"
* 27.25	V-A	ABUT. NO. 1 & BENT NO. 1	13'-2"
27.25	V-A	BENT NO. 2	9'-11"
* 27.25	V-A	BENT NOS. 3-6 & ABUT. NO. 2	13'-2"

* THE SEALER SHALL EXTEND UP AND ACROSS THE CURB OR SIDEWALK AREA TO THE OUTER EDGE OF THE BRIDGE SLAB.

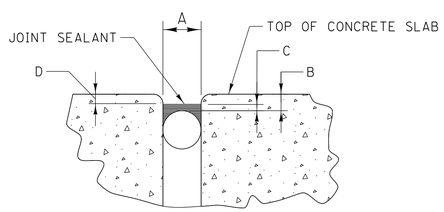

DETAIL "A"

ELASTOMERIC BRIDGE JOINTS AND JOINT SYSTEMS

(EXPANSION JOINT DIAGRAM)

A	B	C	D
JOINT OPENING AT TIME OF SEALING	MINIMUM SPACE FROM TOP OF BACKER ROD TO DRIVE SURFACE	DEPTH OF JOINT SEALANT FROM TOP OF BACKER ROD TO SURFACE OF JOINT SEALANT	MINIMUM SPACE FROM TOP OF JOINT SEALANT TO DRIVE SURFACE
UP TO 3"	1⅜" MIN	½" -⅝"	¾" MIN
ABOVE 3"	1¾" MIN	⅝" -¾"	1" MIN

NOTE:

THE CONTRACTOR MAY OBTAIN A LIST OF ACCEPTABLE BRANDS OF ELASTOMERIC CONCRETE FROM THE TENNESSEE D.O.T. DIVISION OF MATERIALS AND TESTS.

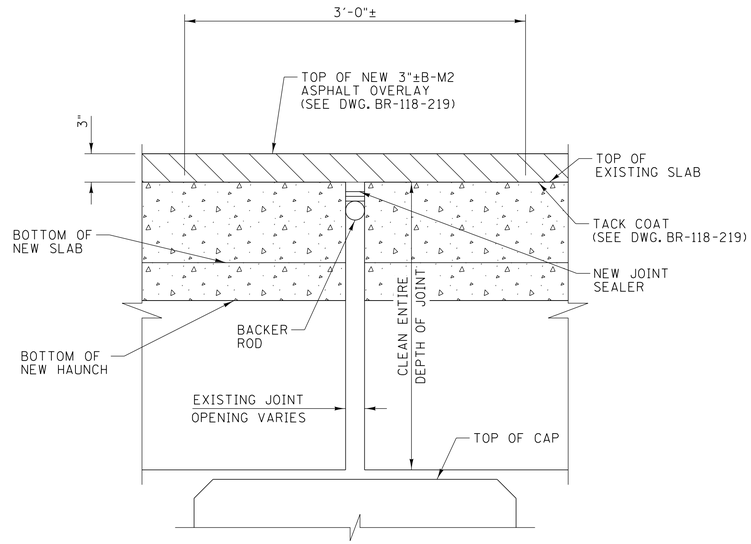

EXISTING BITUMINOUS JOINT REPAIR DETAIL

SCALE: 1½" = 1'-0"

GENERAL NOTES:

ITEM NO. 604-10.44, EXPANSION JOINT REPAIRS (L.F.):

JOINT SYSTEM INCLUDES FURNISHING ALL MATERIAL AND EQUIPMENT AND COMPLETE INSTALLATION AS SHOWN ON THIS DRAWING AND THE MANUFACTURER'S SPECIAL PROVISIONS. THE JOINT SEALANT SYSTEM CONSISTS OF A SURFACE PRIMER; A SELF-LEVELING OR NON-SAG SEALANT AND BACKER MATERIAL. DETAILED SPECIFICATIONS AND INSTALLATION PROCEDURES SHALL BE SUBMITTED TO THE PROJECT ENGINEER PRIOR TO CONSTRUCTION. THE MANUFACTURER AND THE CONTRACTOR SHALL BE RESPONSIBLE FOR THE WORKMANSHIP AND PERFORMANCE OF THE INSTALLED JOINT.

JOINT SEALANT:

THE JOINT SEALANT WILL BE A POURABLE, COLD APPLIED (TWO COMPONENT) RAPID-CURING, SELF LEVELING MATERIAL WHEN INSTALLED ON GRADES LESS THAN OR EQUAL TO 3% ALONG THE CENTERLINE OF THE JOINT. JOINT SEALANTS USED IN CONJUNCTION WITH OTHER MANUFACTURER APPROVED COMPONENTS COMPRISING ANOTHER MANUFACTURER'S JOINT SEALANT SYSTEM WILL MEET THE REQUIREMENTS OF THESE SPECIFICATIONS. PRIOR TO PREPARING THE JOINT SEALANT, THE MANUFACTURER'S REPRESENTATIVE WILL BE CONSULTED TO ESTABLISH THE USABLE POT LIFE OF THE MATERIAL TO THE MIXED CONSIDERING THE AMBIENT TEMPERATURE AT THE TIME OF MIXING. WHEN MIXING HAS BEEN COMPLETED THE AGE OF THE MIXTURE WILL BE TIMED AND THE MATERIAL WILL BE DISCARDED WHEN THE MANUFACTURER'S PREDICTED POT LIFE HAS BEEN EXCEEDED. IF AT ANY POINT IN THE TIME DURING THE INSTALLATION OF JOINT SEALANT THE MANUFACTURER'S REPRESENTATIVE DETERMINES THAT THE MIXED JOINT SEALANT HAS CURED TO A POINT WHERE IT CAN NOT BE PROPERLY INSTALLED IT WILL BE DISCARDED.

SURFACE PRIMER:

THE JOINT SEALANT MUST BE APPLIED TO SURFACES WITH THE USE OF A SPECIAL PRIMER FOR EACH APPLICATION. THE VERTICAL FACES OF THE JOINT RECEIVING SURFACE PRIMER ARE TO BE FREE OF DUST PARTICLES, MOISTURE, OILS AND LAITANCE AT THE TIME THE SURFACE PRIMER IS APPLIED. PER THE MANUFACTURER'S REQUIREMENT, THE SURFACE PRIMER SHALL BE FULLY CURED BEFORE THE JOINT SEALANT IS INSTALLED. THE MANUFACTURER'S APPROVAL AND INSTALLATION PROCEDURES FOR A SPECIAL PRIMER MUST BE GIVEN TO THE PROJECT ENGINEER IN WRITING BEFORE THE PRIMER IS INSTALLED.

BACKER ROD:

THE BACKER ROD SHALL BE A CLOSED CELL, NON-GASSING FOAM MATERIAL CAPABLE OF WITHSTANDING ELEVATED TEMPERATURES RESULTING FROM THE REACTION OF THE TWO COMPONENT SEALANT THAT MAY OCCUR. THE MATERIAL TYPE IS TO BE APPROVED BY THE JOINT SEALANT SYSTEM MANUFACTURER AND TESTED IN ACCORDANCE WITH ASTM D545. A LETTER OF CERTIFICATION SHALL BE ISSUED TO TDOT MATERIALS AND TESTS DIVISION BY THE MANUFACTURER WITH EACH DELIVERY OF MATERIAL ON THE SITE. THE FIRST SHIPMENT SHALL INCLUDE A COPY OF THE MANUFACTURER'S QUALITY ASSURANCE PROGRAM LISTING ALL TESTING CRITERIA.

PROJECT NO.	YEAR	SHEET NO.
79224-4205-04	2015	

REVISIONS

NO.	DATE	BY	BRIEF DESCRIPTION

ALL REINFORCING STEEL IN AREAS OF DECK REPAIR SHALL BE COMPLETELY CLEANED. AREAS OF CONCRETE REMOVAL ARE SHOWN ON DWG. NOS. BR-118-184 THRU BR-118-190. DECK REPAIR WILL BE PAID FOR UNDER ITEM NO. 604-10.30, BRIDGE DECK REPAIR (FULL DEPTH OF SLAB). POWER DRIVEN HAND TOOLS USED FOR THE REMOVAL OF UNSOUND CONCRETE IN MAKING FULL DEPTH REPAIRS ARE SUBJECT TO THE FOLLOWING RESTRICTIONS: 1) PNEUMATIC HAMMERS HEAVIER THAN NOMINAL 90 POUND CLASS SHALL NOT BE USED. ALSO ALL DECK REPAIR OVER BEAMS WILL BE RESTRICTED TO 60 POUND PNEUMATIC HAMMERS. 2) CHIPPING HAMMERS OF THE 15 POUND CLASS SHALL BE USED TO REMOVE CONCRETE FROM BENEATH ANY REINFORCING STEEL.

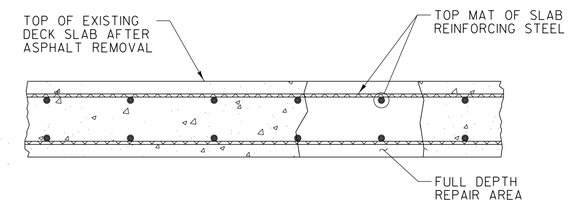

DETAIL SHOWING FULL DEPTH REPAIR

NOTE:

ITEM NO. 604-10.50 SHALL BE BID WITH THE CONTINGENCY THAT THIS ITEM MAY BE INCREASED, DECREASED, OR ELIMINATED AS DIRECTED BY THE ENGINEER.

STATE OF TENNESSEE
DEPARTMENT OF TRANSPORTATION

BRIDGE REPAIR DETAILS
STATE ROUTE 14
BRIDGE NO. 79-SR14-26.28
BRIDGE NO. 79-SR14-26.58
BRIDGE NO. 79-SR14-26.74
BRIDGE NO. 79-SR14-26.90
BRIDGE NO. 79-SR14-27.25

SHELBY COUNTY
2015

AMJAD S. KHAIRI
REGISTERED ENGINEER
AGRICULTURE
COMMERCE
NO. 106655
STATE OF TENNESSEE
04/27/15

GARVER

DESIGNED BY	J. L. HALBROOK	DATE	APR 2015
DRAWN BY	C. W. THOMAS	DATE	APR 2015
SUPERVISED BY	J. H. RUDDELL	DATE	APR 2015
CHECKED BY	A. J. KHAIRI	DATE	APR 2015

TN D.O.T. ENGINEERING SUPERVISOR M. LAWSON

JLHalbrook 4/27/2015 10:41:18 AM
WORKSPACE: TDOT Bridge Five Bridges Shelby County\Drawings\BRG\03 - Final\BR-118-217.dgn
LY:2015\5017002 - Repair