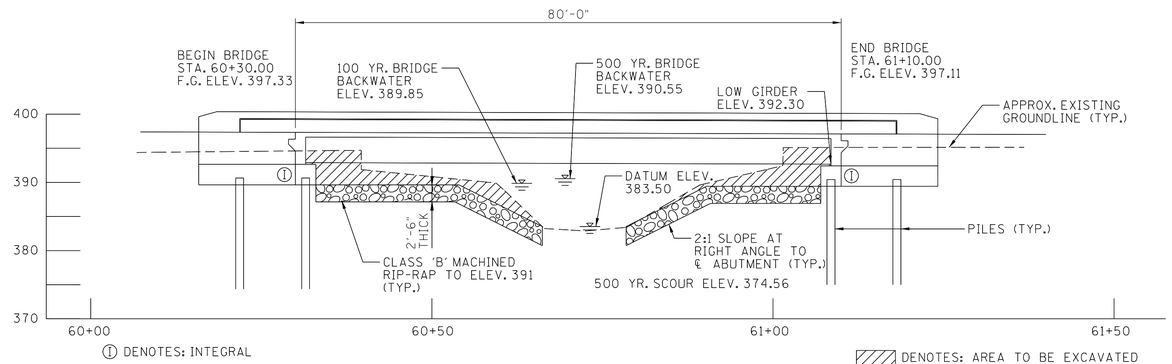


ELEVATION

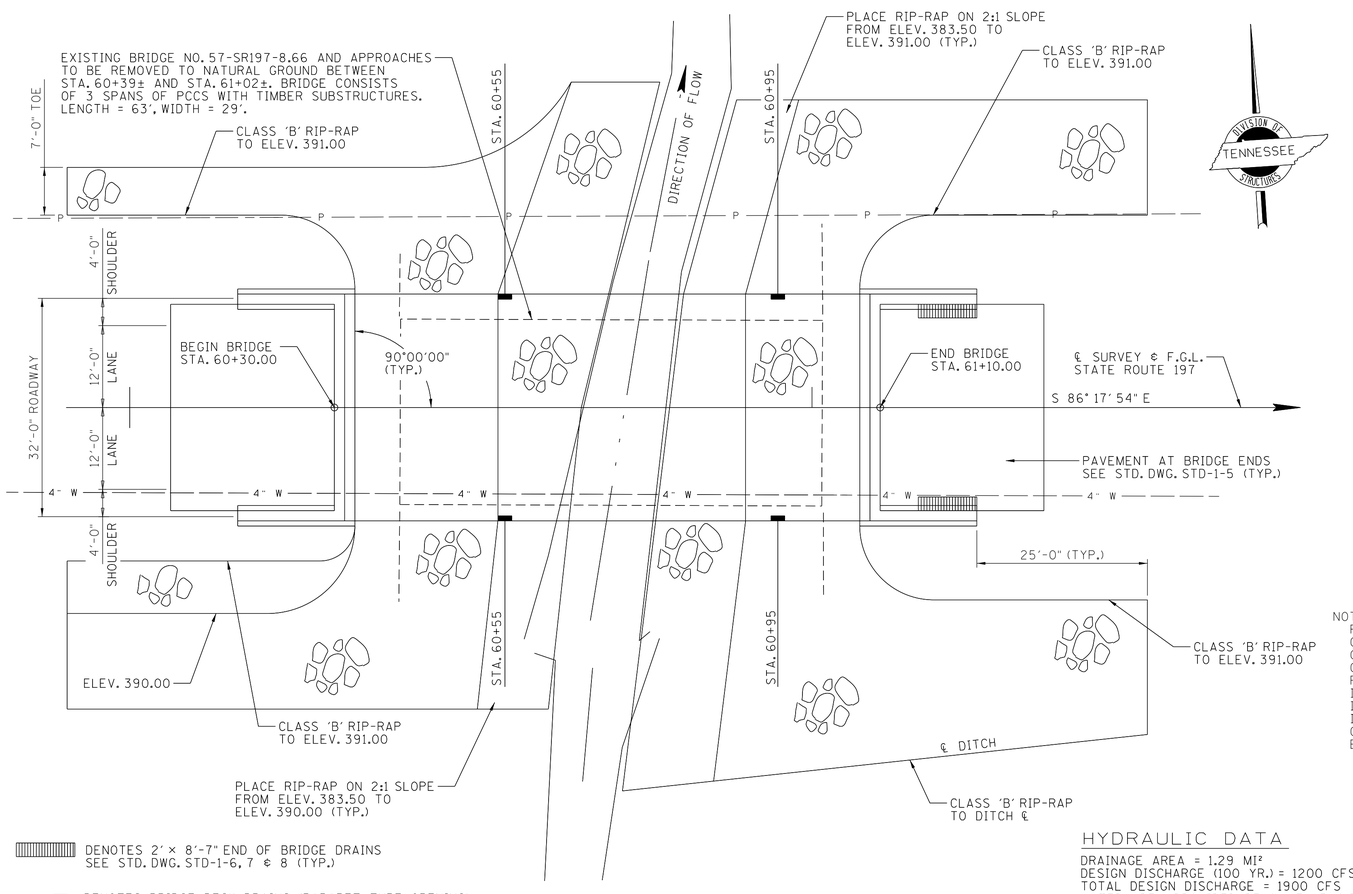


PLAN

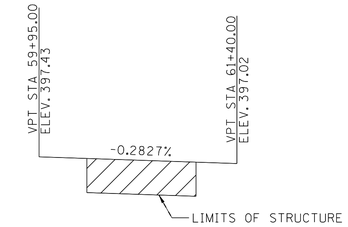


FINISHED GRADE SKETCH

STATE ROUTE 197

CONST. NO. 57034-3205-94

| PROJECT NO. | YEAR | SHEET NO. |
|---|---|---|
| BR-STP-197(10) | 2015 | |

REVISIONS

| NO. | DATE | BY | BRIEF DESCRIPTION |
|---|---|---|---|
| | | | |

## LIST OF DRAWINGS

| | DWG. NO. | LAST REV. DATE |
|---|---|---|
| LAYOUT OF BRIDGE | U-57-131 | ---- |
| GENERAL NOTES & ESTIMATED QUANTITIES | U-57-132 | ---- |
| FOUNDATION DATA | U-57-133 | ---- |
| SUPERSTRUCTURE | U-57-134 | ---- |
| SUPERSTRUCTURE DETAILS | U-57-135 | ---- |
| SUPERSTRUCTURE DETAILS | U-57-136 | ---- |
| PRESTRESSED TYPE III I-BEAM DETAILS | U-57-137 | ---- |
| ABUTMENT NO. 1 | U-57-138 | ---- |
| ABUTMENT NO. 1 DETAILS | U-57-139 | ---- |
| ABUTMENT NO. 2 | U-57-140 | ---- |
| ABUTMENT NO. 2 DETAILS | U-57-141 | ---- |
| FINAL FOUNDATION DATA | U-57-142 | ---- |
| BILL OF STEEL | U-57-143 | ---- |

## LIST OF STANDARD DRAWINGS

| | DWG. NO. | LAST REV. DATE |
|---|---|---|
| BRIDGE RAILING SINGLE SLOPE CONRETE PARAPET | STD-1-1SS | 5-01-14 |
| PAVEMENT AT BRIDGE ENDS | STD-1-5 | 3-26-14 |
| SLIDER PLATES FOR SINGLE SLOPE PARAPETS AND DECK DRAINS | STD-1-2SS | ---- |
| BRIDGE END DRAIN DETAILS 2'x8'-7" & 4'x8'-7" WITH PAVEMENT AT BRIDGE ENDS | STD-1-6 | 4-28-97 |
| BRIDGE END DRAIN DETAILS 2'x8'-7" & 4'x8'-7" WITH PAVEMENT AT BRIDGE ENDS | STD-1-7 | 8-24-11 |
| BRIDGE END DRAIN DETAILS 2'x8'-7" WITH PAVEMENT AT BRIDGE ENDS | STD-1-8 | 5-01-95 |
| STD. PRECAST PRESTRESSED BRIDGE DECK PANELS GENERAL DETAILS | STD-4-1 | 4-08-05 |
| STD. PRECAST PRESTRESSED BRIDGE DECK PANELS DESIGN CRITERIA | STD-4-2 | 4-08-05 |
| STD. PRECAST PRESTRESSED BRIDGE DECK PANELS GENERAL DETAILS | STD-4-3 | 3-02-02 |
| STD. PRECAST PRESTRESSED BRIDGE DECK PANELS CONSTRUCTION DETAILS | STD-4-4 | 6-10-96 |
| STANDARD PILE DETAILS | STD-5-1 | 10-25-93 |
| STANDARD SEISMIC DETAILS | STD-6-1 | 11-01-10 |
| REINF. BAR SUPPORT DETAILS FOR CONC. SLABS | STD-9-1 | 10-07-08 |
| MISCELLANEOUS ABUTMENT & DRAINAGE DETAILS | STD-10-1 | 4-08-05 |
| STD. DETAILS AND INT. DIAPH. DETAILS FOR I-BEAMS | STD-14-2 | 11-01-10 |

## LIST OF SPECIAL PROVISIONS

| | PROV. NO. | LAST REV. DATE |
|---|---|---|
| REGARDING BRIDGE DECK CRACK SEALING | 604CR | 2-19-96 |

NOTE: ANY WORK WITHIN THE STREAM CHANNEL AREA (E.G., FOR PIER FOOTING, RIP-RAP PLACEMENT, MULTI-BARREL CULVERT/BRIDGE CONSTRUCTION, ETC.) SHALL BE SEPARATED FROM FLOWING WATER OR EXPECTED FLOW PATH AND PERFORMED DURING LOW FLOW CONDITIONS. ALL ITEMS USED WITHIN THE STREAM CHANNEL AREA FOR DIVERSION OF FLOW (OR EXPECTED FLOW), UNLESS SPECIFIED IN THE PLANS, SHALL NOT BE PAID FOR DIRECTLY BUT SHALL BE INCLUDED IN THE COST OF OTHER ITEMS. THIS NOTE EXCLUDES ANY ITEMS SPECIFIED IN THE PLANS FOR THE TEMPORARY DIVERSION CHANNELS, EC-STR-31 AND TEMPORARY DIVERSION CULVERTS. EC-STR-32 FOR SINGLE BARREL CULVERT CONSTRUCTION.

## HYDRAULIC DATA

DRAINAGE AREA = 1.29 MI²
DESIGN DISCHARGE (100 YR.) = 1200 CFS
TOTAL DESIGN DISCHARGE = 1900 CFS
WATER AREA PROVIDED BELOW EL. 389.77 = 160.76 FT²
100 YR. VELOCITY = 4.75 FPS
100 YR. BRIDGE BACKWATER = 0.51 FT @ EL. 389.85 FT.
ROADWAY OVERTOPPING ELEVATION = 396.99
100 YR. DISCHARGE = 1200 CFS @ EL. 389.85
500 YR. DISCHARGE = 1480 CFS @ EL. 390.55

BRIDGE NO. 2

2036 ADT = 1680
32'-0" ROADWAY W/ STD-1-1SS PARAPETS
DESIGN SPEED = 60 MPH

STATE OF TENNESSEE
DEPARTMENT OF TRANSPORTATION
LAYOUT OF BRIDGE
STATE ROUTE 197
OVER BRANCH B
BRIDGE I.D. NO. 57S81620011
STATION 60+70.00
LOG MILE 8.66
MADISON COUNTY
2015

KATHLEEN D. McLAUGHLIN — STATE OF TENNESSEE — DEPARTMENT OF AGRICULTURE
Kathleen D. McLaughlin
4/27/2015

CORRECT Wayne G. Seger
ENGINEER OF STRUCTURES

DESIGNED BY D. ICOBESCU DATE 12-12
DRAWN BY P. MOSHER (D. S.) DATE 03-15 (08-13)
SUPERVISED BY MBC/KDM DATE 03-15
CHECKED BY D. SHIKE DATE 04-15

U-57-131

CLASS 'B' MACHINED RIP-RAP = 1250 TONS