IBM1126.DGN

CONST. NO. 57034-3205-94

| PROJECT NO. | YEAR | SHEET NO. |
|---|---|---|
| BR-STP-197(10) | 2015 | |

REVISIONS

| NO. | DATE | BY | BRIEF DESCRIPTION |
|---|---|---|---|
| | | | |

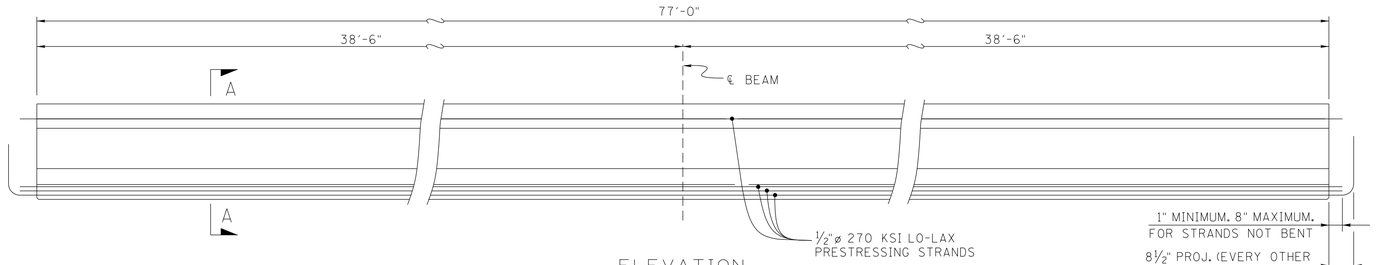


ELEVATION
(SHOWING PRESTRESSING STRANDS)

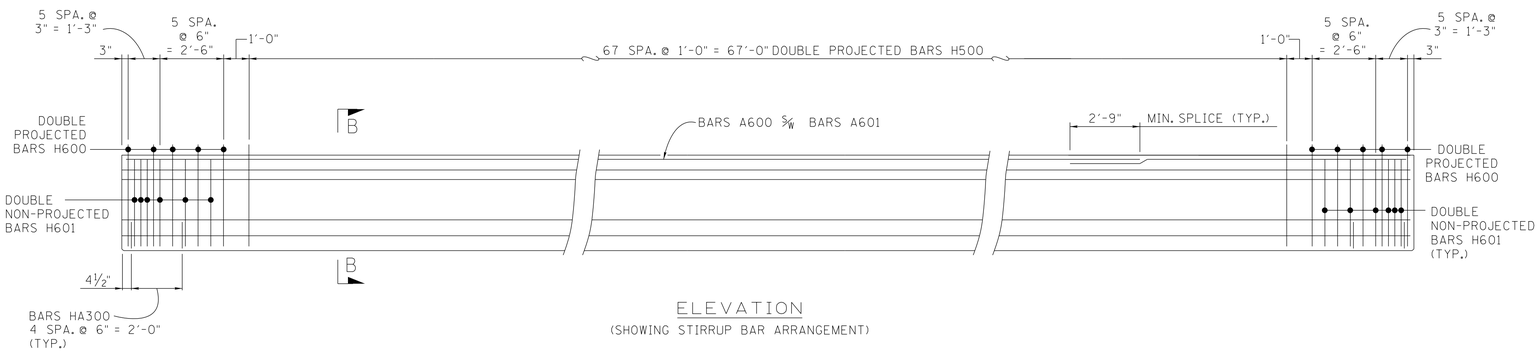


ELEVATION
(SHOWING STIRRUP BAR ARRANGEMENT)

1) NOTE: SEE STD-14-2 FOR I-BEAM STANDARD DETAILS, NOTES, AND REINFORCING.

2) NOTE: ALL BEAMS ARE AASHTO - PCI STANDARD TYPE III.

3) NOTE: ALL PRESTRESSING STRANDS SHOWN ARE 270 KSI LO-LAX, HAVING A 1/2" DIA., AN AREA OF 0.153 IN² AND A JACKING LOAD OF 31,000 LB.

4) NOTE: THE PRESTRESSED BEAMS SHALL ATTAIN AN AGE OF AT LEAST 90 DAYS PRIOR TO POURING THE DECK SLAB.

5) NOTE: THE CONCRETE FOR THIS CONSTRUCTION SHALL BE OF SUCH PROPERTIES AS TO ATTAIN A COMPRESSIVE STRENGTH OF NOT LESS THAN 7,000 PSI AT THE AGE OF 28 DAYS AND STRESS TRANSFER SHALL NOT BE MADE TO THE BRIDGE MEMBER UNTIL THE TEST SPECIMENS INDICATE THAT THE CONCRETE HAS REACHED A COMPRESSIVE STRENGTH OF AT LEAST 6,000 PSI. SEE GENERAL NOTES FOR CONCRETE FINISHING NOTE.

BILL OF STEEL PER BEAM

| BAR | SIZE | NO. REQ'D | LENGTH |
|---|---|---|---|
| A500 | 5 | 6 | 5'-6" |
| A600 | 6 | 3 | 60'-0" |
| A601 | 6 | 3 | 19'-5" |
| H500 | 5 | 136 | 5'-4" |
| H600 | 6 | 20 | 5'-4" |
| H601 | 6 | 24 | 4'-9" |
| HA300 | 3 | 10 | 4'-3" |

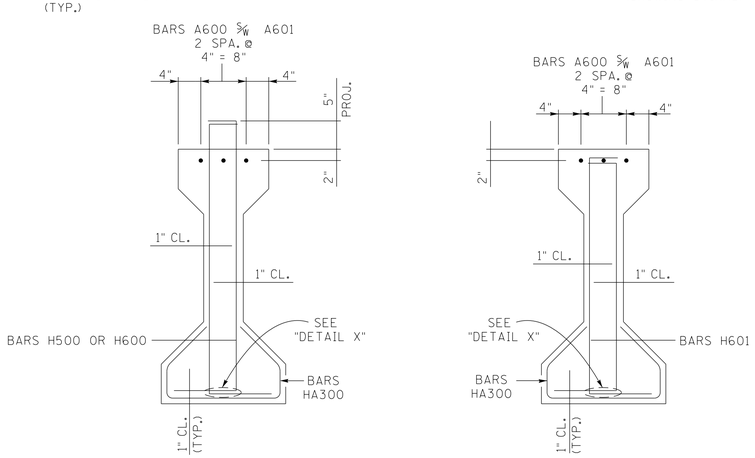


SHOWING PROJECTING BARS

SHOWING NON-PROJECTING BARS

SECTION B-B

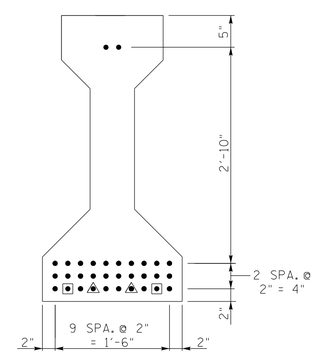


SECTION A-A
SHOWING PRESTRESSING STRANDS
(32 STRANDS)

◉ DENOTES: BOND BREAK 2'-0" FROM ENDS OF BEAM
◬ DENOTES: BOND BREAK 4'-0" FROM ENDS OF BEAM

ESTIMATED QUANTITIES - PER BEAM

| NO. BEAMS REQ'D. | PRESTRESSING STRANDS (LOW RELAXATION) LB. | CLASS "A" CONCRETE C.Y. | REINFORCING STEEL LB. |
|---|---|---|---|
| 4 | 1,328 | 11 | 1,496 |

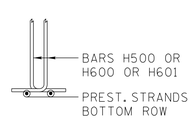


DETAIL X

PRESTRESSED BEAM DESIGN DATA - PER BEAM

LIVE LOAD DISTRIBUTION FACTOR FOR MOMENT: 0.829 LANES
LIVE LOAD DISTRIBUTION FACTOR FOR SHEAR: 0.867 LANES
COMPOSITE DEAD LOAD: DC = 188 LB/FT
COMPOSITE DEAD LOAD: DW = 270 LB/FT
COMPOSITE SLAB DESIGN STRENGTH: f'c = 3000 psi

NOTE: DOWNWARD DEFLECTION UNDER TOTAL DL IS NOT ALLOWED.

BRIDGE NO. 2
STATE OF TENNESSEE
DEPARTMENT OF TRANSPORTATION

PRESTRESSED I-BEAM DETAILS
STATE ROUTE 197
OVER BRANCH B
STATION 60+70.00
LOG MILE 8.66
MADISON COUNTY
2015

STATE OF TENNESSEE KATHLEEN D. McLAUGHLIN REGISTERED ENGINEER AGRICULTURE

Kathleen D. McLaughlin
4/27/2015

CORRECT Wayne G. Sieg
ENGINEER OF STRUCTURES

| | | | |
|---|---|---|---|
| DESIGNED BY | D. SHIKE | DATE | 12-12 |
| DRAWN BY | BILL EASTON | DATE | 03-15 |
| SUPERVISED BY | MBC / KDM | DATE | 03-15 |
| CHECKED BY | D. SHIKE | DATE | 03-15 |

U-57-137