SUP1126.DGN

| CONST. NO. | 57034-3205-94 | |
|---|---|---|
| PROJECT NO. | YEAR | SHEET NO. |
| BR-STP-197(10) | 2015 | |

REVISIONS

| NO. | DATE | BY | BRIEF DESCRIPTION |
|---|---|---|---|
| | | | |

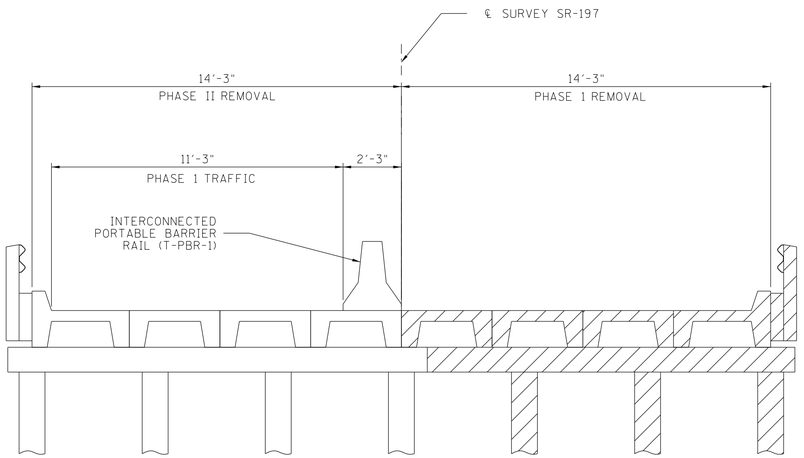


REMOVAL SKETCH
(LOOKING FORWARD ON SURVEY)

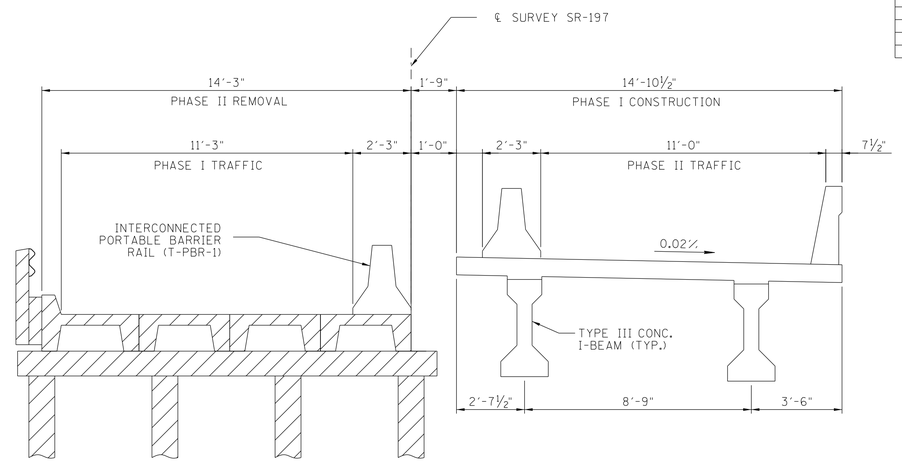


TRAFFIC PHASING SKETCH
(LOOKING FORWARD ON SURVEY)

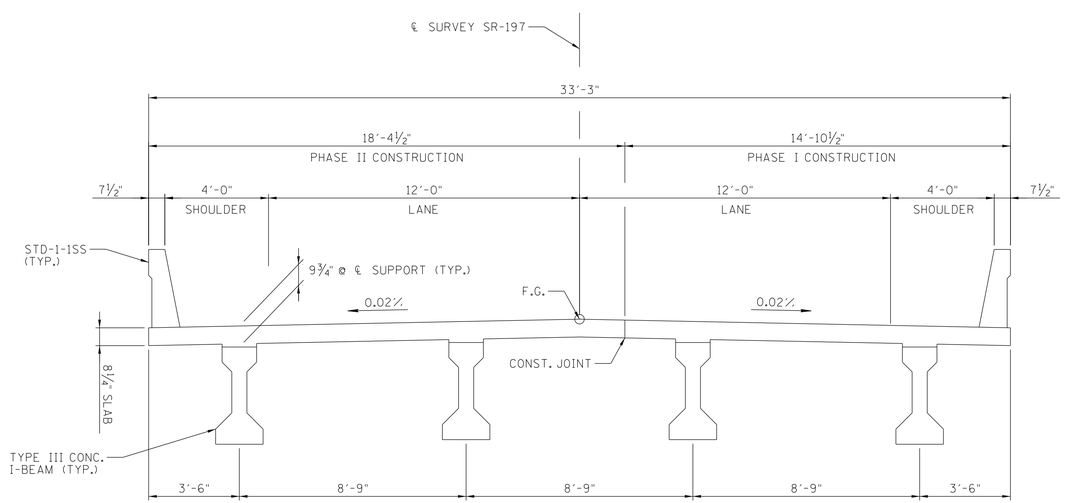


TYPICAL CROSS SECTION
(LOOKING FORWARD ON SURVEY)

BRIDGE NO. 2

STATE OF TENNESSEE
DEPARTMENT OF TRANSPORTATION

SUPERSTRUCTURE DETAILS
STATE ROUTE 197
OVER
BRANCH B
STATION 60+70.00
LOG MILE 8.66
MADISON COUNTY
2015

STATE OF TENNESSEE
KATHLEEN D. McLAUGHLIN
REGISTERED ENGINEER
No. 114 EXPIRES 6/30/15
DEPARTMENT OF AGRICULTURE

Kathleen D. McLaughlin
4/27/2015

CORRECT Wayne G. Sieper
ENGINEER OF STRUCTURES

| | | | |
|---|---|---|---|
| DESIGNED BY | D. SHIKE | DATE | 08-13 |
| DRAWN BY | P. MOSHER | DATE | 03-15 |
| SUPERVISED BY | MBC/KDM | DATE | 03-15 |
| CHECKED BY | D. SHIKE | DATE | 03-15 |

U-57-136