SUP1125.DGN

CONST. NO. 57034-3205-94

PROJECT NO.	YEAR	SHEET NO.
BR-STP-197(10)	2015	

REVISIONS

NO.	DATE	BY	BRIEF DESCRIPTION

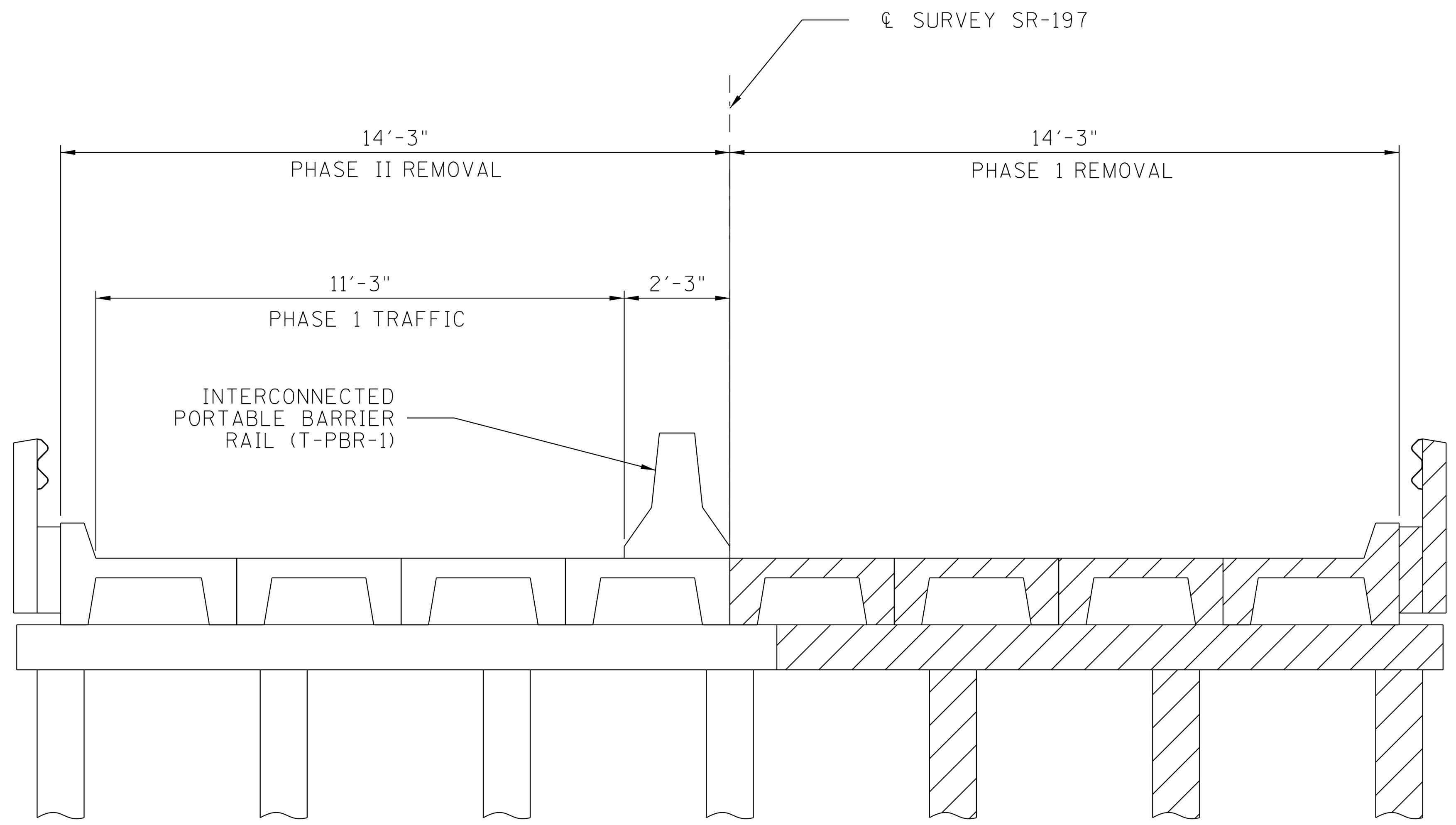

REMOVAL SKETCH
(LOOKING FORWARD ON SURVEY)

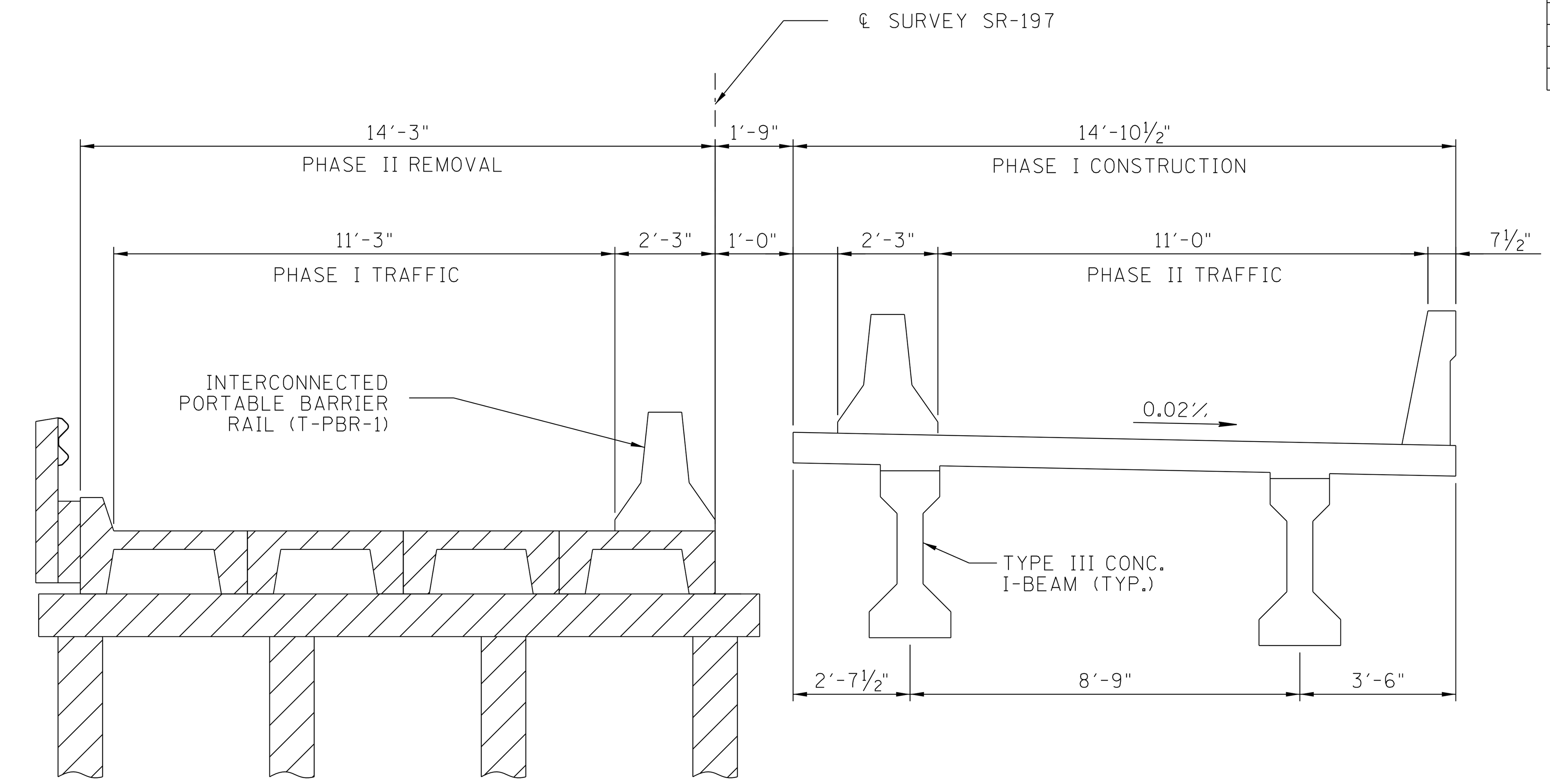

TRAFFIC PHASING SKETCH
(LOOKING FORWARD ON SURVEY)

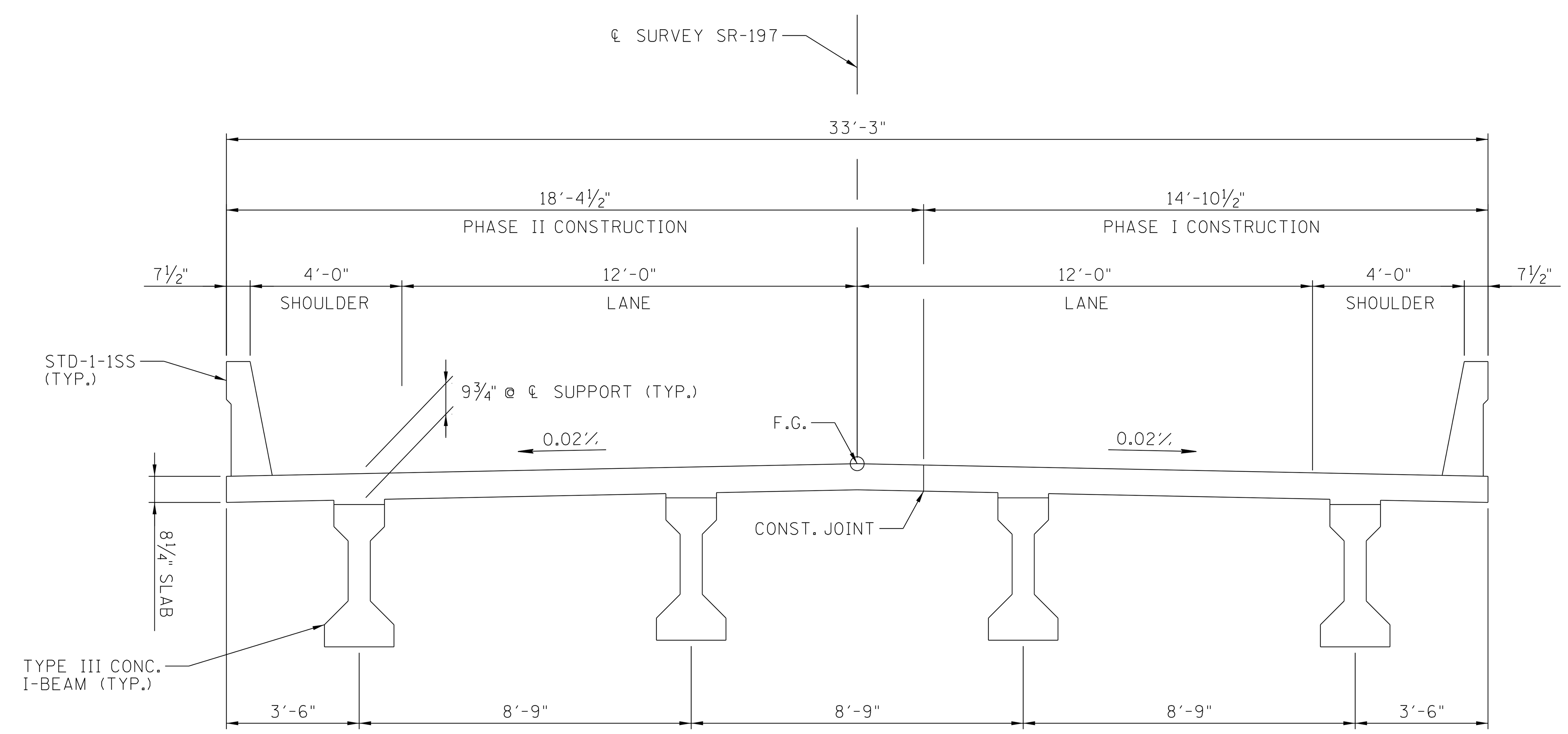

TYPICAL CROSS SECTION
(LOOKING FORWARD ON SURVEY)

DESIGNED BY D. SHIKE DATE 08-13
DRAWN BY P. MOSHER DATE 03-15
SUPERVISED BY MBC/KDM DATE 03-15
CHECKED BY ____ DATE ____

BRIDGE NO. 1

STATE OF TENNESSEE
DEPARTMENT OF TRANSPORTATION

SUPERSTRUCTURE DETAILS
STATE ROUTE 197
OVER
BRANCH A
STATION 55+45.00
LOG MILE 8.56
MADISON COUNTY
2015

KATHLEEN D. McLAUGHLIN Registered Engineer AGRICULTURE COMMERCE No. 101531 STATE OF TENNESSEE
Kathleen McLaughlin
4/27/2015

CORRECT Wayne J. Seger
ENGINEER OF STRUCTURES

U-57-123