TENNESSEE D.O.T.
DESIGN DIVISION
FILE NO.

TYPE	YEAR	PROJECT NO.	SHEET NO.
RESURF		06001-8180-44	B1
		NH-I-75-1(139)	
BRIDGE REPAIR		06001-4180-04	

PIN # 104532.01

TABULATION OF BRIDGE RELATED WORK AND ESTIMATED QUANTITIES

LOCATION OF BRIDGE AND BRIDGE NUMBER	REFERENCE DRAWINGS TO BE PRINTED WITH CONTRACT DRAWINGS	TYPE OF WORK	604-10.50 BRIDGE DECK RERAIRS (PARTIAL DEPTH OF SLAB) SY	604-10.30 BRIDGE DECK RERAIRS (FULL DEPTH OF SLAB) SY	617-01 BRIDGE DECK SEALANT SY
06-I75-19.17 NBL/ HIWASSEE RIVER 06I00750027		BRIDGE DECK REPAIR BRIDGE DECK SEALANT	460	10	4693
06-I75-19.17 SBL/ HIWASSEE RIVER 06I00750028		BRIDGE DECK REPAIR BRIDGE DECK SEALANT	460	10	4693
TOTAL			920	20	9386

BRIDGE DECK REPAIR MATERIAL

IF OVERNIGHT LANE CLOSURES ARE PROVIDED FOR THIS PROJECT AND THE LANE CLOSURES ARE SUCH THAT TRAFFIC WILL BE KEPT OFF THE BRIDGE DECK WHERE DECK REPAIRS WILL BE MADE. THEN HIGH EARLY STRENGTH CONCRETE SHALL BE USED WITH A COMPRESSIVE STRENGTH OF 3,000 p.s.i. AT 18 HOURS. THE CONTRACTOR SHALL PROVIDE PROOF PRIOR TO BEGINNING WORK THAT PROPOSED CONCRETE MIX WILL OBTAIN REQUIRED PROPERTIES. PROOF SHALL BE PROVIDED BY AN INDEPENDENT TESTING COMPANY AND SUBMITTED TO THE MATERIAL AND TEST DIVISION OF TENNESSEE DEPARTMENT OF TRANSPORTATION FOR APPROVAL. CONCRETE REPAIR AREAS SHOULD BE (WET) CURE A MINIMUM OF 12 HOURS. TRAFFIC SHALL NOT BE ALLOWED ON REPAIRED AREAS UNTIL THE CONCRETE HAS REACHED A MINIMUM COMPRESSION STRENGTH OF 3,000 p.s.i.

◑ MASTIC AS RECOMMENDED BY MANUFACTURER OF MEMBRANE. SEE STD. SPEC. ART. 906.04.

△ 1½" ø HOLE TO BE DRILLED BY THE CONTRACTOR NEAR FACE OF NEW PARAPETS OR EXISTING CURBS AT LOW POINTS.

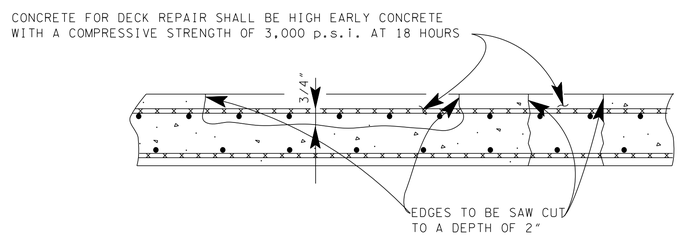

SKETCH SHOWING DECK REPAIR

NOTE: PARTIAL DEPTH DECK REPAIR ONLY REMOVE CONCRETE IN ALL DELAMINATED AREAS TO A DEPTH OF ¾" BELOW THE TOP BAR OF THE TOP MAT OF REINFORCING STEEL.

NOTE: PARTIAL AND FULL DEPTH DECK REPAIRS
ALL REINFORCING STEEL IN THE AREAS OF THE DECK REPAIRS SHALL BE COMPLETELY CLEANED. CLEANING SHALL BE DONE PRIOR TO PLACING NEW CONCRETE . AREAS OF CONCRETE REMOVAL SHALL BE DESIGNATED BY PERSONNEL FROM THE HEADQUARTERS, BRIDGE INSPECTION AND REPAIR OFFICE. INSPECTIONS TO DETERMINE AREAS OF DECK REPAIR SHALL BE SCHEDULE WITH THE BRIDGE REPAIR OFFICE AT LEAST (3) DAYS IN ADVANCE.

NOTE: THE COST OF CONCRETE, CONCRETE REMOVAL, LABOR, CLEANING REBARS AND ANY MISCELLANEOUS MATERIAL REQUIRED SHALL BE PAID FOR UNDER ITEM NO. 604-10.50 BRIDGE DECK REPAIR (PARTIAL DEPTH OF SLAB), S.Y. AND ITEM NO. 604-10.30 BRIDGE DECK REPAIR (FULL DEPTH OF SLAB) S.Y.

NOTE: ITEM NO. 604-10.50, BRIDGE DECK REPAIR (PARTIAL DEPTH OF SLAB) AND ITEM NO. 604-10.30, BRIDGE DECK REPAIR (FULL DEPTH OF SLAB) SHALL BE BID THIS MAY BE INCREASED, DECREASED, OR ELIMINATED BY THE ENGINEER.

NOTE: CONTRACTOR SHALL USE EXTREME CARE AND TAKE ANY MEASURE NECESSARY TO INSURE THAT NO DEBRIS OR CONSTRUCTION MATERIAL IS DROPPED INTO THE STREAM BELOW. THIS SHALL BE ACCOMLISHED BY THE USE OF BASKETS, NETTING, WRAPPING, WORK PLATFORM, OR OTHER SIMLARLY EFFECTIVE MEANS. NO WORK OR EQUIPMENT IS ALLOWED IN THE WATER OR STREAM CHANNEL.

POWER DRIVEN HAND TOOLS:

POWER DRIVEN HAND TOOLS USED FOR THE REMOVAL OF UNSOUND CONCRETE IN MAKING PARTIAL AND FULL DEPTH REPAIRS ARE SUBJECT TO THE FOLLOWING RESTRICTIONS: (1) PARTIAL DEPTH REPAIRS; PNEUMATIC HAMMERS HEAVIER THAN NOMINAL 60 lb. CLASS SHALL NOT BE USED. ALSO TRAFFIC CONTROL SHALL BE SET UP DURING PARTIAL DEPTH REPAIRS OVER TRAFFIC. (2) FULL DEPTH REPAIRS; PNEUMATIC HAMMERS HEAVIER THAN NOMINAL 90 lb. CLASS SHALL NOT BE USED. ALSO ALL DECK REPAIR OVER BEAMS WILL BE RESTRICTED TO 60 lb. PNEUMATIC HAMMERS. (3) CHIPPING HAMMERS OF THE 15 lb. CLASS SHALL BE USED TO REMOVE CONCRETE FROM BENEATH ANY REINFORCING STEEL.

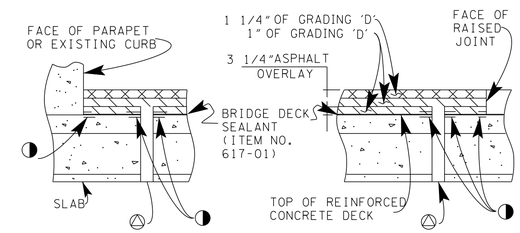

TYPICAL AT FACE OF EXISTING CURB OR NEW PARAPET

TYPICAL FOR EXISTING RAISED EXPANSION JOINTS

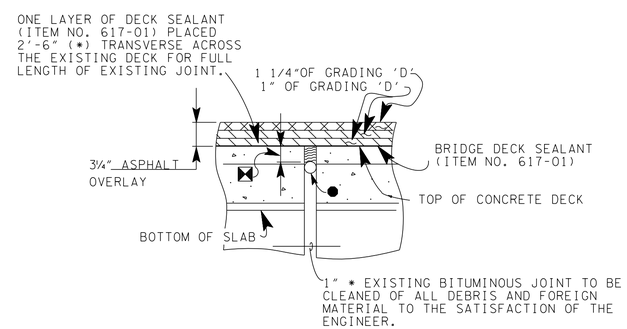

SECTION THRU EXISTING BRIDGE SLAB JOINT

(TYPICAL AT ALL EXISTING BITUMINOUS JOINTS WHEN NO JOINT REPAIR DETAIL IS SPECIFIED IN THE TABLE ABOVE.)

● NOTE: THE EXISTING JOINT OPENING SHALL BE CAULKED WITH A BACKER ROD OF SUITABLE DIAMETER. THE ROD SHALL BE PLACED AT A DEPTH TO ENSURE THE CORRECT WIDTH/DEPTH RATIO OF THE NEW JOINT SEALANT MATERIAL. BAKER ROD SHALL BE AS PER JOINT MANUFACTURERS RECOMMENDATION.

⧓ NOTE: THE EXISTING JOINT SEALING MATERIAL SHALL BE REMOVED AND THE CONCRETE SURFACES IN THE JOINT AREA SHALL BE BLAST CLEANED PRIOR TO THE INSTALLATION OF THE NEW JOINT SEALER. THE CONTRACTOR SHALL USE A COLD POUR SINGLE COMPONENT SILICONE JOINT SEALER FROM LIST 5, SECTION A.COLD POUR (ONE COMPONENET JOINT SEALER) OF TDOT QUALIFIED PRODCUTS LIST (QPL). COST OF JOINT CLEANING AND SEALING ARE TO BE INCLUDED UNDER ITEM NO. 617-01 (BRIDGE DECK SEALANT). THE SEALER SHALL EXTEND UP AND ACROSS THE CURB AND OR SIDEWALK AREA TO THE OUTER EDGE OF THE BRIDGE DECK.

BRIDGE DECK SEALANT DETAILS

NOTE: ON BRIDGE DECK WHERE THERE IS A BITUMINOUS JOINT OR WITH NO EXPANSION JOINT, MEMBRANE SHALL EXTEND 2'-0" OVER THE END OF THE BRIDGE DECK. IF THE DECK HAS STEEL EXPANSION JOINT, THE MEMBRANE SHALL STOP AT THE STEEL EXPANSION JOINT.

NOTE: PRIOR TO THE PLACEMENT OF THE BRIDGE DECK SEAL MEMBRANE, THE BRIDGE SHALL BE CLEANED OF ALL LOOSE DEBRIS AND EXCESS DIRT. THE BRIDGE DECK SHALL ALSO BE CLEANED OF ALL OIL, DIESEL OR ANY OTHER PETROLEUM PRODUCT SPILLS AND DRY ACCORDING TO THE MANUFACTURE'S SPECIFICATIONS.
THE WATERPROOFING MEMBRANE SHALL BE APPLIED ACCORDING TO THE MANUFACTURE'S SPECIFICATIONS. THE COST OF ALL THE MATERIALS NECESSARY FOR THE WATERPROOFING APPLICATION (WATERPROOFING MEMBRANE, PRIMER, MASTIC, ETC.) AND LABOR SHALL BE PAID FOR UNDER ITEM NO. 617-01 BRIDGE DECK SEALANT S.Y.

BRIAN K. EGLI
REGISTERED ENGINEER
AGRICULTURE
COMMERCE
No. 107196
STATE OF TENNESSEE
07/07/15

STATE OF TENNESSEE
DEPARTMENT OF TRANSPORTATION

BRIDGE TABULATION AND ESTIMATED QUANTITIES

7/7/2015 7:23:53 AM
P:\STRUCT_RPT\Bridgerepair\Sliesh\Tabulated Sheets\Rg.2\INTERSTATE\6 Oct. 2015 Letting\Bradley Co\06-I75, LM 15.35 to LM 19.35.dgn