CONST. NO. 02014-3212-94

PROJECT NO.	YEAR	SHEET NO.
BR-STP-130(20)	2015	

REVISIONS

NO.	DATE	BY	BRIEF DESCRIPTION
1	9-16-15	SAS	ADDED NOTES & MODIFIED QUANTITIES

GENERAL NOTES

SPECIFICATIONS: STANDARD ROAD AND BRIDGE SPECIFICATIONS OF THE TENNESSEE DEPARTMENT OF TRANSPORTATION (JAN. 1, 2015 EDITION).

LOADING: HL-93 LIVE LOADING; SEISMIC DESIGN CATEGORY "A" WITH A_S = 0.079, S_{DS} = 0.188, S_{D1} = 0.071. (1000 YEAR RETURN PERIOD). DEAD LOAD INCLUDES 35 LB/SQ. FT. FOR FUTURE WEARING SURFACE.

DESIGN SPECIFICATION: AASHTO LRFD SEVENTH EDITION, 2014, AND THE 2011 AASHTO GUIDE SPECIFICATIONS FOR LRFD SEISMIC BRIDGE DESIGN, EDITION 2 (WITH INTERIMS).

CONCRETE: TO BE CLASS "A" (CAST IN PLACE) f'c = 3,000 PSI EXCEPT AS NOTED OTHERWISE.

CLASS "D" CONCRETE FOR BRIDGE DECKS SHALL BE IN ACCORDANCE WITH SECTION 604 OF THE STANDARD SPECIFICATIONS.

BRIDGE DECK SURFACE FINISH: TO BE IN ACCORDANCE WITH METHOD 3 IN ARTICLE 604.22 OF THE STANDARD SPECIFICATIONS.

BRIDGE DECK FORMS: BRIDGE DECK FORMS FOR CONCRETE DECKS SHALL BE CONSTRUCTED USING EITHER REMOVABLE FORMS OR PERMANENT FORMS. PERMANENT FORMS MAY BE EITHER REMAIN-IN-PLACE STEEL OR PRECAST, PRESTRESSED CONCRETE PANELS. IN EITHER CASE, FORMS SHALL BE ATTACHED BY MEANS OTHER THAN WELDING TO MAIN STRUCTURAL MEMBERS OR REINFORCING STEEL. TEMPORARY ERECTION DIAPHRAGMS MUST BE USED AT ENDS OF PRECAST CONCRETE GIRDERS WHERE END DIAPHRAGMS, SUPPORT DIAPHRAGMS, OR ABUTMENT BACKWALLS ARE TO BE POURED CONCURRENTLY WITH THE DECK AND SHALL BE PROVIDED ELSEWHERE IN ACCORDANCE WITH THE SPECIFICATIONS TO PREVENT GIRDER ROTATION. SEE STANDARD DRAWINGS STD-4-1 THRU 4, STD-14-2 AND ARTICLE 604.05 OF THE STANDARD SPECIFICATIONS.

REINFORCING STEEL: SHALL BE ASTM A615 GRADE 60 UNLESS NOTED OTHERWISE. SEE SECTION 604 AND 907 OF THE STANDARD SPECIFICATIONS.

SPECIAL NOTE - FOOTING FOR PIER: AFTER EXCAVATION TO ROCK FOR FOOTING HAS BEEN COMPLETED, HOLES 6' DEEP SHALL BE DRILLED AT POINTS DESIGNATED BY THE ENGINEER. FROM THE RESULTS OBTAINED, THE ENGINEER SHALL DETERMINE THE FINAL FOOTING ELEVATIONS. NO REINFORCING STEEL FOR PIER COLUMN SHALL BE ORDERED UNTIL FINAL FOOTING ELEVATION HAVE BEEN DETERMINED.

PILES: TO BE HP10×42 DRIVEN TO REFUSAL ON ROCK OR A MINIMUM BEARING OF 55 TONS FOR THE ABUTMENTS.

NOTE: PILES SHALL BE EQUIPPED WITH STEEL POINTS. ALSO, SEE STANDARD DRAWING STD-5-1 FOR ADDITIONAL NOTES.

△1 NOTE: THE CONTRACTOR SHALL SUBMIT APPROPRIATE PILE DRIVING SYSTEMS TO TDOT FOR APPROVAL PRIOR TO THE INSTALLATION OF THE FIRST PILE. APPROVAL OF THE PILE DRIVING SYSTEM BY THE ENGINEER WILL BE SUBJECT TO SATISFACTORY FIELD PERFORMANCE OF THE PILE DRIVING PROCEDURES.

FOUNDATION PREPARATION: SEE SECTION 204 OF THE STANDARD SPECIFICATIONS. IF COFFERDAMS ARE REQUIRED, THEY SHALL BE IN ACCORDANCE WITH SECTION 204.09 OF THE STANDARD SPECIFICATIONS.

BRIDGE RAIL SYSTEM: BUILD BRIDGE RAILINGS ACCORDING TO STANDARD DRAWING NO. STD-1-1SS. THE RAILING SHALL BE FORMED AND CAST PLUMB, NOT PERPENDICULAR TO THE SLAB. THE DIMENSIONS AT THE TRAFFIC FACE SHALL BE KEPT CONSTANT, WITH VARIATION DUE TO CROSS SLOPE ACCOMMODATED AT THE REAR FACE.

NOTE: THE CONTRACTOR SHALL PROVIDE 100% CONVENTIONAL FALL PROTECTION FOR WORKERS INSTALLING DECKING ABOVE 15 FEET.

SHOP DRAWINGS: SEE SECTION 105.02 OF THE STANDARD SPECIFICATIONS.

RIP-RAP: MACHINED RIP-RAP SHALL BE CLASS "C" IN ACCORDANCE WITH SECTION 709 OF THE STANDARD SPECIFICATIONS AND SHALL BE MEASURED AND PAID FOR UNDER ITEM NO. 709-05.09.

VALUE ENGINEERING ALTERNATE BRIDGE DESIGN CRITERIA: ALTERNATE BRIDGE DESIGN PROPOSALS MAY NOT DIMINISH THE FUNCTIONAL OR STRUCTURAL EQUIVALENCY OF THE BRIDGE AND MUST MEET OR EXCEED BOTH THE SERVICE LEVEL AND ULTIMATE CAPACITIES OF THE CONTRACT PLANS STRUCTURE. ADDITIONALLY, THE WATERWAY OPENING AND FLOOD CLEARANCES MAY NOT BE REDUCED, NOR MAY VERTICAL CLEARANCES BE LESS THAN THE MINIMUM ACCEPTABLE FOR THE TYPE FACILITY CROSSED.

REQUIREMENTS AND RESTRICTIONS FOR PHASE CONSTRUCTION:
1- THE STAGE CONSTRUCTION SEQUENCE MAY PROHIBIT THE EXTRACTION OF SOME SHEET PILING. ALL COSTS ASSOCIATED WITH SHEET PILING SHALL BE INCLUDED IN THE LUMP SUM BID PRICE FOR FOUNDATION PREPARATION.
2- THE LOCATION OF LONGITUDINAL CONSTRUCTION JOINTS SHALL NOT BE CHANGED TO ACCOMMODATE REMAIN-IN-PLACE DECK FORMS.
3- NO SHEET PILES OR BEARING PILES MAY BE DRIVEN FROM THE EXISTING OR PROPOSED STRUCTURE.
4- ONE SIGNALIZED TRAFFIC LANE (10'-0" MINIMUM WIDTH) SHALL BE MAINTAINED AT ALL TIMES.

FINISHING CONCRETE SURFACES: CONCRETE FINISHING SHALL BE IN ACCORDANCE WITH SECTION 604.21 OF THE TENNESSEE STANDARD SPECIFICATION. A CLASS I FINISH FOLLOWED BY AN APPLIED TEXTURE FINISH SHALL BE USED IN LIEU OF A CLASS II FINISH. NO TEXTURE FINISH SHALL BE APPLIED PRIOR TO COMPLETION OF PAVING AND HAULING OPERATIONS AT THE BRIDGE SITE. THE APPLIED TEXTURE FINISH SHALL BE MEASURED AND PAID FOR UNDER ITEM 604-04.01.

△1 NOTE: COST OF ALL MATERIALS AND LABOR NECESSARY FOR INSTALLING THE INTERMEDIATE DIAPHRAGMS SHALL BE INCLUDED IN THE UNIT PRICE BID FOR OTHER ITEMS.

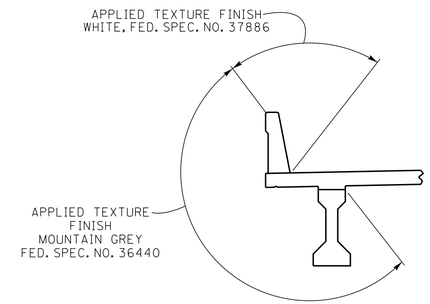

TYP. @ CANTILEVER

APPLIED TEXTURE FINISH SKETCH

NOTE: IN addition TO THE SURFACES SHOWN IN THE APPLIED TEXTURE FINISH SKETCH ALL EXPOSED SURFACES OF THE PIERS, WINGWALLS, ABUTMENTS, AND EXTERIOR PORTIONS OF ENDWALLS ARE TO RECEIVE AN APPLIED TEXTURE FINISH (MOUNTAIN GREY, FED. SPEC. NO. 36440).

△1 ESTIMATED QUANTITIES

	ITEM NO.	DESCRIPTION	UNIT	TOTAL	SUPERSTRUCTURE	ABUT. NO. 1	PIER. NO. 1	PIER. NO. 2	ABUT. NO. 2
13 6	202-04.01	REMOVAL OF STRUCTURES (EXIST. BR. NO. 02-SR130-8.30)	L.S.	1					
2	204-02.01	DRY EXCAVATION (BRIDGES)	C.Y.	222		111			111
2	204-03.01	WET EXCAVATION (BRIDGES)	C.Y.	191			37	154	
2	204-04.01	ROCK EXCAVATION (BRIDGES)	C.Y.	20			10	10	
	204-05	ROCK DRILLING (BRIDGES)	L.F.	72			36	36	
11	204-10.01	FOUNDATION PREPARATION (PIER NO. 1 - STA. 438+80.00)	L.S.	1			1		
11	204-10.02	FOUNDATION PREPARATION (PIER NO. 2 - STA. 439+60.00)	L.S.	1				1	
8	303-01.02	GRANULAR BACKFILL (BRIDGES)	TON	34		17			17
	604-02.03	EPOXY COATED REINFORCING STEEL	LB.	83,614	80,094	1,760			1,760
7	604-03.01	CLASS 'A' CONCRETE (BRIDGES)	C.Y.	351		60	101	129	61
12	604-03.02	STEEL BAR REINFORCEMENT (BRIDGES)	LB.	54,815	2,112	6,846	17,361	21,650	6,846
1	604-03.04	PAVEMENT AT BRIDGE ENDS	S.Y.	204					
	604-03.09	CLASS 'D' CONCRETE (BRIDGE DECK)	C.Y.	244	244				
	604-04.01	APPLIED TEXTURE FINISH (NEW STRUCTURES)	S.Y.	1,159	792	34	150	149	34
	604-05.31	BRIDGE DECK GROOVING (MECHANICAL)	S.Y.	1,056					
	606-02.03	STEEL PILES (10 INCH)	L.F.	290		78			212
10	606-02.06	PILE TIPS (STEEL PILES, 10 INCH)	EA.	20		10			10
4	615-01.03	PRESTRESSED CONCRETE I-BEAM (TYPE III)	L.F.	1,005					
9	617-02	BRIDGE DECK CRACK SEALING	L.F.	258					
	617-05	SEALANT (HMWM)	GAL.	1					
	620-05.01	CONCRETE PARAPET SINGLE SLOPE (STD-1-1SS)	L.F.	474					
5	710-09.01	6" PERFORATED PIPE WITH VERTICAL DRAIN SYSTEM	L.F.	150		75			75
	710-09.02	6" PIPE UNDERDRAIN	L.F.	32		16			16

1 NOTE: PRIOR TO CONSTRUCTION OF THE PAVEMENT AT BRIDGE ENDS, THE CONTRACTOR SHALL SUBMIT A PROPOSED BILL OF STEEL TO THE ENGINEER FOR APPROVAL.

2 EXCAVATION BASED ON FINAL PROFILE AT THE ABUTMENTS AND EXISTING GROUND AT THE PIERS.

3 NOTE: THE COST OF BITUMINOUS-FIBERBOARD AND ALL MISCELLANEOUS JOINT MATERIALS TO BE INCLUDED IN THE UNIT PRICE BID FOR OTHER ITEMS.

4 NOTE: COST OF ELASTOMERIC PADS AND RUBBER BONDING CEMENT TO BE INCLUDED IN THE UNIT PRICE BID FOR THE PRESTRESSED BEAM.

5 NOTE: COST OF POLYETHYLENE SHEETING AND ALL MISCELLANEOUS ITEMS NECESSARY FOR INSTALLATION TO BE INCLUDED IN THE UNIT PRICE BID FOR PERFORATED PIPE.

6 NOTE: LUMP SUM: TO INCLUDE REMOVAL OF EXISTING BRIDGE NO. 02-SR130-8.30 AND APPROACHES TO NATURAL GROUND BETWEEN STA. 438+40.00 AND 440+15.00. EXISTING BRIDGE DESCRIPTION: 6-SPAN CONCRETE TEE BEAM STRUCTURE, 171' LONG WITH A 27'-4" OUT-TO-OUT WIDTH. MAINTAIN TRAFFIC BY STAGE CONSTRUCTION.

7 NOTE: THE COST OF ALL MATERIALS AND LABOR NECESSARY FOR THE INSTALLATION OF 20 ANCHOR BOLT ASSEMBLIES SHALL BE INCLUDED IN THE UNIT PRICE BID FOR CLASS "A" CONCRETE (BRIDGES), ITEM NO. 604-03.01. USE 1" DIA. ANCHOR BOLTS (F1554, GR. 55).

8 NOTE: GRANULAR BACKFILL SHALL BE CLASS "A" GRADING "D" MATERIAL. SEE STANDARD DRAWING STD-10-1.

9 INCLUDES ALL COST FOR INSTALLING THE BRIDGE DECK CRACK SEALER (HMWM) INCLUDING CRACK PREPARATION, CLEANING, LABOR AND ALL MISCELLANEOUS MATERIALS REQUIRED TO SEAL THE LONGITUDINAL CONSTRUCTION JOINT ACCORDING TO SPECIAL PROVISION 604CR AND MANUFACTURER'S SPECIFICATIONS. CRACK SEALING SHALL BE DONE AT THE END OF CONSTRUCTION TO ALLOW SHRINKAGE OF DECK CONCRETE CAUSING THE CRACK TO OCCUR.

10 NOTE: THE UNIT PRICE BID FOR THE CAST STEEL POINTS SHALL INCLUDE FURNISHING AND INSTALLATION TO THE PILES.

11 NOTE: SEE FOUNDATION PREPARATION NOTE THIS SHEET.

12 NOTE: MECHANICAL BAR SPLICERS MUST BE ON THE QUALIFIED PRODUCTS LIST 27 MAINTAINED BY THE DIVISION OF MATERIALS AND TESTS. THE BAR SPLICER SHALL MEET AASHTO STANDARD SPECIFICATIONS FOR MECHANICAL CONNECTION. WHEN EPOXY COATING IS REQUIRED, THE EXPOSED THREADS SHALL BE REPAIRED AFTER SPLICING ACCORDING TO SECTION 907 OF THE STANDARD SPECIFICATIONS. THE COST OF FURNISHING THE BAR SPLICERS, (AND EPOXY COATING WHEN REQUIRED) INCLUDING ALL LABOR AND MATERIALS NECESSARY FOR COMPLETE INSTALLATION, SHALL BE INCLUDED IN THE UNIT PRICE BID FOR ITEM NO. 604-03.02.

13 THE EXISTING SPILL-THROUGH ABUTMENTS WILL NEED TO BE SUPPORTED DURING PHASE 1. THE CONTRACTOR SHALL SUBMIT TEMPORARY SHORING DETAILS TO THE ENGINEER FOR APPROVAL. THE COST OF THE TEMPORARY SHORING SHALL BE INCLUDED IN THE UNIT PRICE BID FOR REMOVAL OF STRUCTURES, ITEM NO. 202-04.01.

09/16/15

BRIDGE NO. 1

STATE OF TENNESSEE
DEPARTMENT OF TRANSPORTATION

GENERAL NOTES AND
ESTIMATED QUANTITIES
STATE ROUTE 130 OVER
SUGAR CREEK
STATION 439+20.00
LOG MILE 8.30
BEDFORD COUNTY
2015

CORRECT ENGINEER OF STRUCTURES

DESIGNED BY	S. STEPP	DATE	07-15
DRAWN BY	M. DYE	DATE	07-15
SUPERVISED BY	M.B.C./H.M.B.	DATE	07-15
CHECKED BY	S. STEPP	DATE	07-15