CONST. NO. 02014-3212-94

PROJECT NO.	YEAR	SHEET NO.
BR-STP-130(20)	2015	

REVISIONS

NO.	DATE	BY	BRIEF DESCRIPTION
01	9/16/15	SAS	MODIFIED COLUMN HEIGHT AND ESTIMATED QUANTITIES

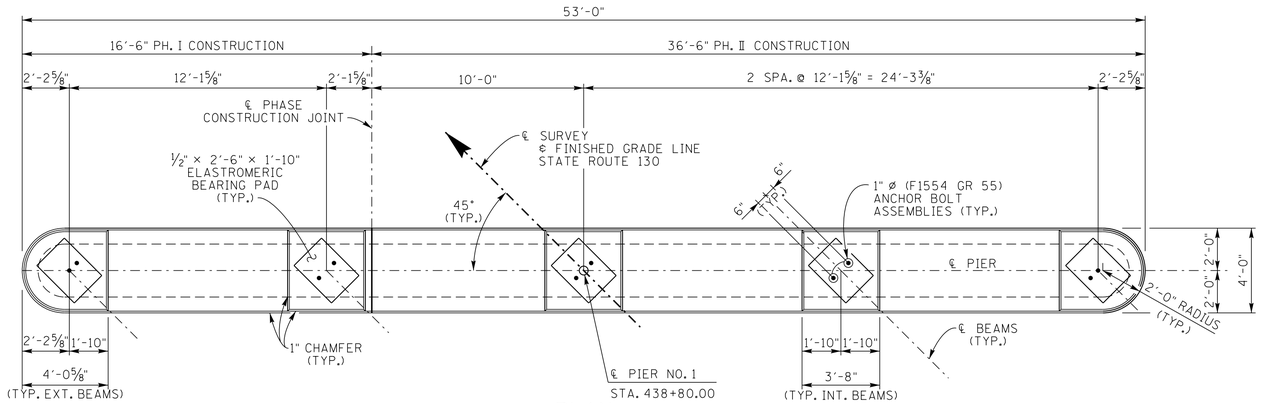

PLAN

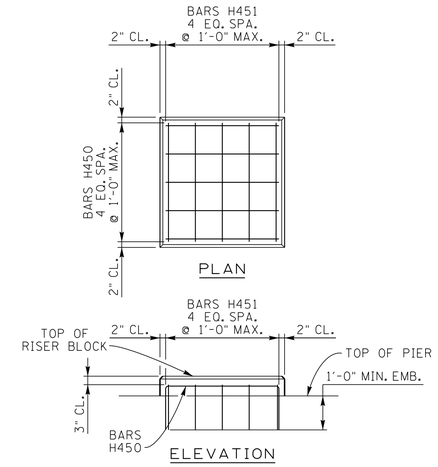

REINFORCED RISER BLOCK DETAILS

NOTE: WHEN POURING CAP BEAM, PROVISIONS SHALL BE MADE FOR SETTING ANCHOR BOLTS. SEE STANDARD DRAWING NO. STD-6-1. BOLT PROJECTION 11".

NOTE: RISER BLOCKS TO BE POURED MONOLITHICALLY WITH CAP BEAM.

NOTE: ELASTOMERIC PADS SHALL BE IN PLACE A MINIMUM OF ONE DAY BEFORE BEING DISTURBED BY SETTING BEAMS ON CONCRETE. PLACE RUBBER BONDING CEMENT IN SUCH A WAY THAT VISIBLE CONCRETE SURFACES WILL NOT BE STAINED.

NOTE: COLUMN STEEL TO EXTEND 2'-6" MIN. INTO CAP BEAM.

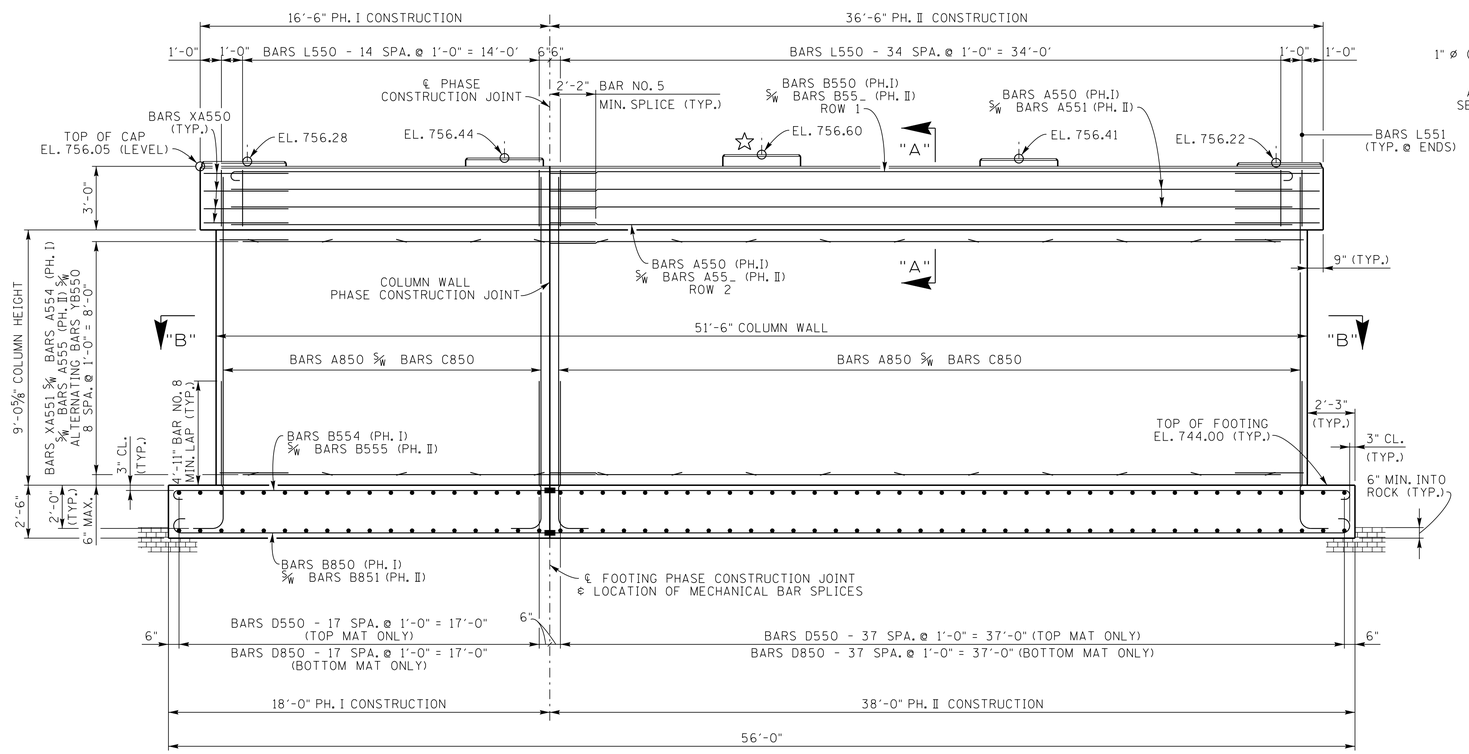

1 ELEVATION
(LOOKING FORWARD ON SURVEY)

☆ DENOTES: SEE RISER BLOCK REINFORCEMENT DETAILS ON THIS DRAWING.

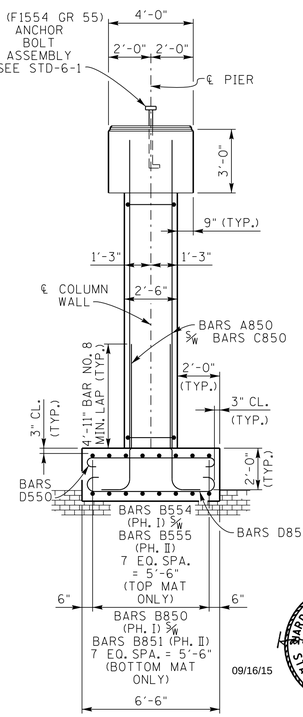

END ELEVATION

1 ESTIMATED QUANTITIES

CLASS "A" CONCRETE (BRIDGES) C.Y.	STEEL BAR REINFORCEMENT (BRIDGES) LBS.
101	17,361

BRIDGE NO. 1

STATE OF TENNESSEE
DEPARTMENT OF TRANSPORTATION

PIER NO. 1
STATE ROUTE 130
OVER
SUGAR CREEK
STATION 439+20.00
LOG MILE 8.30
BEDFORD COUNTY
2015

BARDIE M. BROOKS JR. — STATE OF TENNESSEE — 09/16/15

CORRECT Wayne A. Segar
ENGINEER OF STRUCTURES

DESIGNED BY	S. STEPP	DATE	07-15
DRAWN BY	T. WISEMAN	DATE	07-15
SUPERVISED BY	MBC / HMB	DATE	07-15
CHECKED BY	SCOTT STEPP	DATE	07-15