BILL OF STEEL

SUPERSTRUCTURE

BAR	LOCATION	SIZE	NO. REQ'D	BENDING DIMENSIONS A	B	C	D	LENGTH
A504	DIAPHRAGM	5	40					4'-6"
A505	DIAPHRAGM	5	80					10'-6"
A506	DIAPHRAGM	5	60					6'-11"
L400	DIAPHRAGM	4	20	1'-2"	1'-2"			5'-5"
L401	DIAPHRAGM	4	80	1'-2"	3'-6½"			10'-2"

SUPERSTRUCTURE (EPOXY-COATED)

BAR	LOCATION	SIZE	NO. REQ'D	BENDING DIMENSIONS A	B	C	D	LENGTH
A500E	SLAB	5	86					34'-5"
A501E	SLAB	5	43					35'-2"
A502E	SLAB	5	174					60'-0"
A503E	SLAB	5	58					37'-5"
A600E	SLAB	6	560					18'-7"
A601E	SLAB	6	540					25'-7"
SERIES								
A602E	SLAB PH. I	6	2					240'-3"
				LENGTH VARIES FROM 4'-9¼" TO 18'-1¼" IN INC. OF 8" (21 BARS)				
SERIES								
A603E	SLAB PH. II	6	2					468'-3"
				LENGTH VARIES FROM 5'-1¼" TO 25'-1¼" IN INC. OF 8" (31 BARS)				
A604E	SLAB PH. I & II	6	20					5'-4"
SERIES								
A605E	SLAB PH. II	6	2					481'-3"
				LENGTH VARIES FROM 4'-1" TO 25'-1" IN INC. OF 7⅞" (33 BARS)				
SERIES								
A606E	SLAB PH. I	6	2					246'-9"
				LENGTH VARIES FROM 5'-1" TO 18'-5" IN INC. OF 8" (21 BARS)				
A700E	SLAB	7	80					45'-0"
A701E	SLAB	7	86					60'-0"
B570E	PARAPET	5	1264					2'-8"

ABUTMENT NO. 1

BAR	LOCATION	SIZE	NO. REQ'D	BENDING DIMENSIONS A	B	C	D	LENGTH
A440	ROADWAY BRACKET PH. I	4	1					21'-6"
A441	WINGWALLS	4	27					4'-5"
A442	ROADWAY BRACKET PH. II	4	1					34'-1"
A443	WINGWALL	4	6					15'-4"
A444	WINGWALL	4	6					14'-10"
A540	ABUTMENT BEAM PH. I	5	2					25'-1"
A541	WING BEAM	5	2					17'-3"
A542	WING BEAM	5	2					16'-0"
A544	ABUTMENT BEAM PH. II	5	2					37'-4"
A640	ENDWALL PH. I	6	10					24'-6"
A641	FILLETS	6	15					3'-11"
A642	ENDWALL	6	7					3'-9"
A643	WINGWALLS	6	27					4'-5"
A644	WINGWALL	6	6					16'-4"
A645	ENDWALL PH. II	6	10					36'-3"
A647	WINGWALL	6	6					13'-10"
A740	ABUTMENT BEAM PH. I	7	13					26'-7"
A741	WING BEAM	7	10					17'-3"
A742	WING BEAM	7	10					16'-0"
A743	ABUTMENT BEAM PH. II	7	13					37'-4"
B640	ENDWALL	6	10	5'-0"				5'-8"
H450	RISER BLOCKS	4	6	1'-8"	1'-6"			4'-8"
H540	ENDWALL/ROADWAY BRACKET	5	53	2'-2"	6"			3'-2"
H640	ENDWALL/WINGWALLS	6	81	1'-2"	4'-0"			9'-2"
HA640	FILLETS	6	25	1'-6"	1'-4"	3'-0"		5'-10"
L540	ABUTMENT BEAM	5	46	3'-2"	2'-8"			12'-7"
L541	WING BEAMS	5	23	2'-8"	2'-8"			11'-7"
L542	ABUTMENT BEAM	5	1	3'-6"	2'-8"			13'-3"
L543	ABUTMENT BEAM	5	2	4'-5"	2'-8"			15'-1"

ABUT. NO. 1 (EPOXY-COATED)

BAR	LOCATION	SIZE	NO. REQ'D	BENDING DIMENSIONS A	B	C	D	LENGTH
A643E	ENDWALL	6	115					4'-5"
A645E	ENDWALL PH. II	6	2					36'-3"
A648E	ENDWALL PH. I	6	2					24'-11"
B570E	WINGWALL/PARAPET	5	48	2'-1"				2'-8"
F640E	ENDWALL/ROADWAY BRACKET	6	38	1'-1"	1'-3"	1'-1"	1'-3"	3'-11"
HP570E	WINGWALL/PARAPET	5	16	4"	3'-10"	1'-1"		7'-11"
R640E	ENDWALL	6	54	2'-0"	2'-0"			4'-0"

ABUTMENT NO. 2

BAR	LOCATION	SIZE	NO. REQ'D	BENDING DIMENSIONS A	B	C	D	LENGTH
A440	ROADWAY BRACKET PH. I	4	1					21'-6"
A441	WINGWALLS	4	27					4'-5"
A442	ROADWAY BRACKET PH. II	4	1					34'-1"
A443	WINGWALL	4	6					15'-4"
A444	WINGWALL	4	6					14'-10"
A540	ABUTMENT BEAM PH. I	5	2					25'-1"
A541	WING BEAM	5	2					17'-3"
A542	WING BEAM	5	2					16'-0"
A544	ABUTMENT BEAM PH. II	5	2					37'-4"
A640	ENDWALL PH. I	6	10					24'-6"
A641	FILLETS	6	15					3'-11"
A642	ENDWALL	6	7					3'-9"
A643	WINGWALLS	6	27					4'-5"
A644	WINGWALL	6	6					16'-4"
A645	ENDWALL PH. II	6	10					36'-3"
A647	WINGWALL	6	6					13'-10"
A740	ABUTMENT BEAM PH. I	7	13					26'-7"
A741	WING BEAM	7	10					17'-3"
A742	WING BEAM	7	10					16'-0"
A743	ABUTMENT BEAM PH. II	7	13					37'-4"
B640	ENDWALL	6	10	5'-0"				5'-8"
H450	RISER BLOCKS	4	6	1'-8"	1'-6"			4'-8"
H540	ENDWALL/ROADWAY BRACKET	5	53	2'-2"	6"			3'-2"
H640	ENDWALL/WINGWALLS	6	81	1'-2"	4'-0"			9'-2"
HA640	FILLETS	6	25	1'-6"	1'-4"	3'-0"		5'-10"
L540	ABUTMENT BEAM	5	46	3'-2"	2'-8"			12'-7"
L541	WING BEAMS	5	23	2'-8"	2'-8"			11'-7"
L542	ABUTMENT BEAM	5	1	3'-6"	2'-8"			13'-3"
L543	ABUTMENT BEAM	5	2	4'-5"	2'-8"			15'-1"

ABUT. NO. 2 (EPOXY-COATED)

BAR	LOCATION	SIZE	NO. REQ'D	BENDING DIMENSIONS A	B	C	D	LENGTH
A643E	ENDWALL	6	115					4'-5"
A645E	ENDWALL PH. II	6	2					36'-3"
A648E	ENDWALL PH. I	6	2					24'-11"
B570E	WINGWALL/PARAPET	5	48	2'-1"				2'-8"
F640E	ENDWALL/ROADWAY BRACKET	6	38	1'-1"	1'-3"	1'-1"	1'-3"	3'-11"
HP570E	WINGWALL/PARAPET	5	16	4"	3'-10"	1'-1"		7'-11"
R640E	ENDWALL	6	54	2'-0"	2'-0"			4'-0"

1 PIER NO. 1

BAR	LOCATION	SIZE	NO. REQ'D	BENDING DIMENSIONS A	B	C	D	LENGTH
A550	CAP PH. I	5	10					18'-5"
A551	CAP PH. II	5	2					33'-10"
A552	CAP PH. II	5	2					35'-5"
A553	CAP PH. II	5	2					36'-3"
A554	COLUMN PH. I	5	18					16'-8"
A555	COLUMN PH. II	5	18					34'-6"
A850	CAP/COLUMN	8	206					11'-7"
B550	CAP PH. I	5	6	18'-5"				19'-0"
B551	CAP PH. II	5	2	33'-10"				34'-5"
B552	CAP PH. II	5	2	35'-5"				36'-0"
B553	CAP PH. II	5	2	36'-3"				36'-10"
B554	FOOTING PH. I	5	8	17'-9"				18'-4"
B555	FOOTING PH. II	5	8	37'-9"				38'-4"
B850	FOOTING PH. I	8	8	17'-9"				18'-8"
B851	FOOTING PH. II	8	8	37'-9"				38'-8"
C850	COLUMN/FOOTING	8	206	6'-11"				8'-3"
D550	FOOTING	5	56	6'-0"				7'-2"
D850	FOOTING	8	56	6'-0"				7'-10"
H450	RISER	4	5	3'-4"	1'-4"			6'-0"
H451	RISER	4	5	3'-6"	1'-4"			6'-2"
L550	CAP	5	50	3'-8"	2'-8"			13'-7"
L551	CAP	5	2	2'-8"	2'-8"			11'-7"
XA550	CAP	5	8	2'-2"	1'-10"			10'-2"
XA551	COLUMN	5	18	2'-2"	1'-1"			7'-9"
YB550	COLUMN	5	135	2'-2"				3'-2"

PIER NO. 2

BAR	LOCATION	SIZE	NO. REQ'D	BENDING DIMENSIONS A	B	C	D	LENGTH
A550	CAP PH. I	5	10					18'-5"
A551	CAP PH. II	5	2					33'-10"
A552	CAP PH. II	5	2					35'-5"
A553	CAP PH. II	5	2					36'-3"
A554	COLUMN PH. I	5	30					16'-8"
A555	COLUMN PH. II	5	30					34'-6"
A851	CAP/COLUMN	8	206					17'-6"
B550	CAP PH. I	5	6	18'-5"				19'-0"
B551	CAP PH. II	5	2	33'-10"				34'-5"
B552	CAP PH. II	5	2	35'-5"				36'-0"
B553	CAP PH. II	5	2	36'-3"				36'-10"
B554	FOOTING PH. I	5	8	17'-9"				18'-4"
B555	FOOTING PH. II	5	8	37'-9"				38'-4"
B850	FOOTING PH. I	8	8	17'-9"				18'-8"
B851	FOOTING PH. II	8	8	37'-9"				38'-8"
C850	COLUMN/FOOTING	8	206	6'-11"				8'-3"
D550	FOOTING	5	56	6'-0"				7'-2"
D850	FOOTING	8	56	6'-0"				7'-10"
H450	RISER	4	5	3'-4"	1'-4"			6'-0"
H451	RISER	4	5	3'-6"	1'-4"			6'-2"
L550	CAP	5	50	3'-8"	2'-8"			13'-7"
L551	CAP	5	2	2'-8"	2'-8"			11'-7"
XA550	CAP	5	8	2'-2"	1'-10"			10'-2"
XA551	COLUMN	5	30	2'-2"	1'-1"			7'-9"
YB550	COLUMN	5	225	2'-2"				3'-2"

CONST. NO. 02014-3212-94

PROJECT NO.	YEAR	SHEET NO.
BR-STP-130(20)	2015	

REVISIONS

NO.	DATE	BY	BRIEF DESCRIPTION
01	9/16/15	SAS	MODIFIED PIER NO. 1 BAR QUANTITIES AND LENGTH

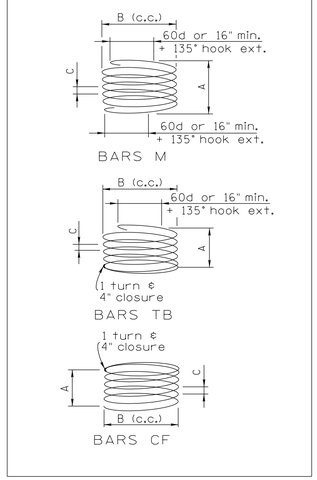

REINFORCING STEEL CODE

TYPE	SIZE	SERIES
A	5	06

NOTE: DIMENSIONS SHOWN ON THIS SHEET ARE OUTSIDE TO OUTSIDE OF BAR. STANDARD C.R.S.I. HOOK DETAILS SHALL APPLY, EXCEPT AS NOTED.

NOTE: THE SUFFIX E FOR BARS SO MARKED DENOTES EPOXY COATED REINFORCEMENT.

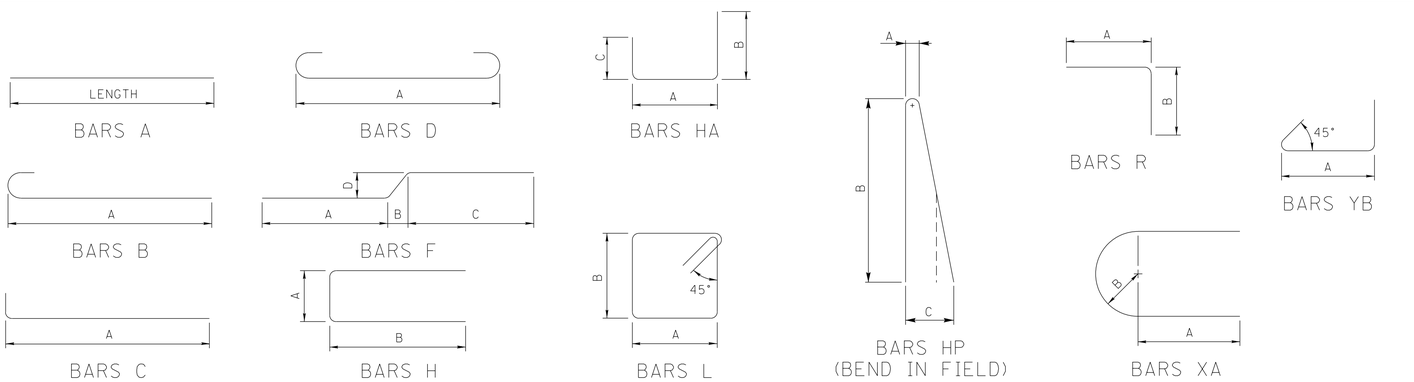

DESIGNED BY S. STEPP DATE 07-15
DRAWN BY T. WISEMAN DATE 07-15
SUPERVISED BY MBC / HMB DATE 07-15
CHECKED BY SCOTT STEPP DATE 07-15

CORRECT Wayne G. Sieper
ENGINEER OF STRUCTURES

09/16/15

HAROLD MARIE M. BROOKS JR. LICENSED PROFESSIONAL ENGINEER AGRICULTURE STATE OF TENNESSEE

BRIDGE NO. 1
STATE OF TENNESSEE
DEPARTMENT OF TRANSPORTATION

BILL OF STEEL
STATE ROUTE 130
OVER
SUGAR CREEK
STATION 439+20.00
LOG MILE 8.30
BEDFORD COUNTY
2015

U-73-20