CONST. NO. 02014-3212-94

PROJECT NO.	YEAR	SHEET NO.
BR-STP-130(20)	2015	

REVISIONS

NO.	DATE	BY	BRIEF DESCRIPTION
1	9-16-15	SAS	MODIFIED BOTTOM OF FOOTING ELEVATION AND ADDED REVISION DATES

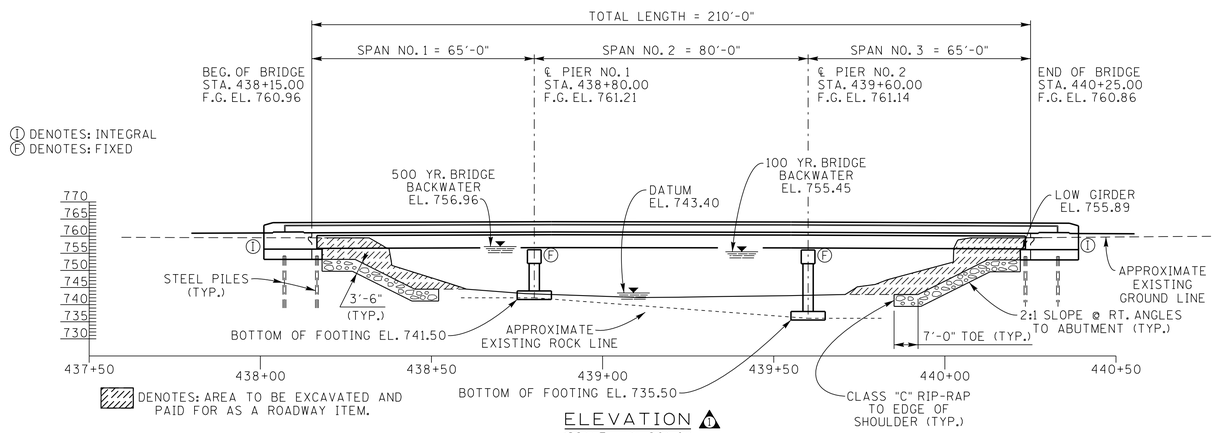

ELEVATION 1
(SCALE = 1": 20'-0")

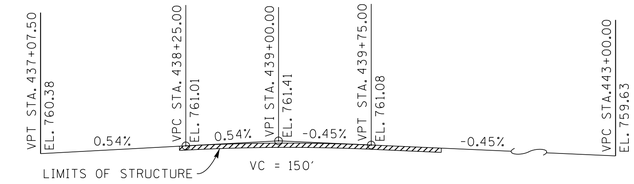

GRADE SKETCH
(STATE ROUTE 130)
(NOT TO SCALE)

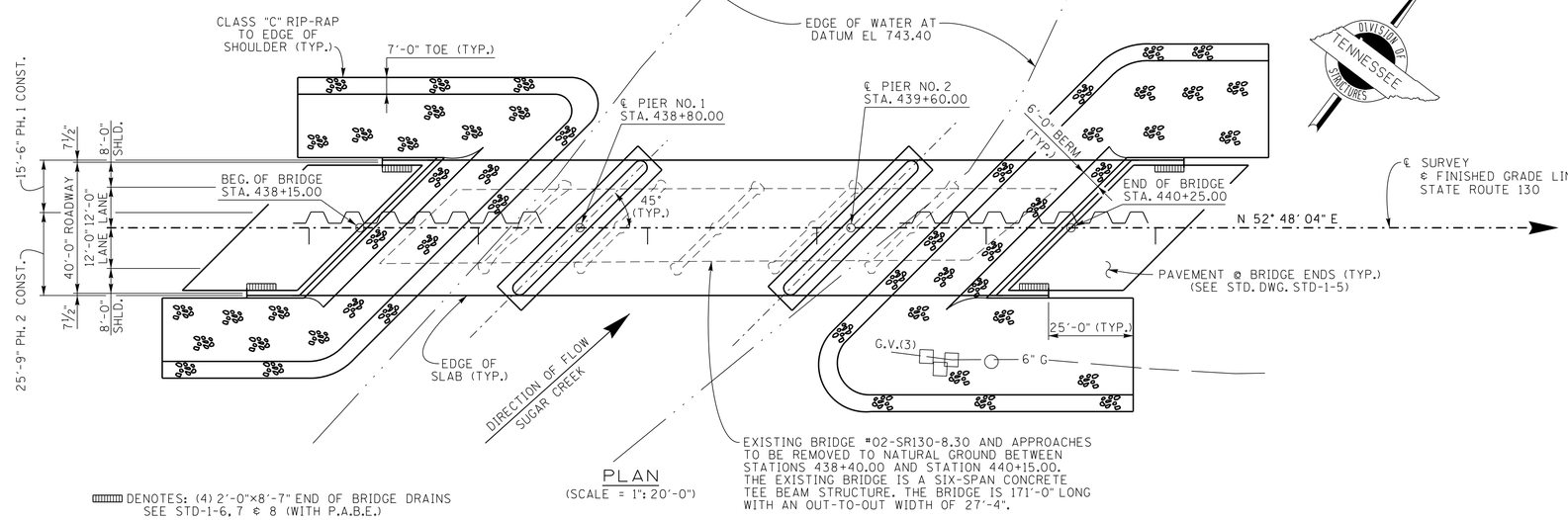

PLAN
(SCALE = 1": 20'-0")

1

LIST OF DRAWINGS

	DWG. NO.	LAST REV. DATE
LAYOUT OF BRIDGE	U-73-1	9-16-15
GENERAL NOTES AND ESTIMATED QUANTITIES	U-73-2	9-16-15
FOUNDATION DATA	U-73-3	
SUPERSTRUCTURE	U-73-4	
SUPERSTRUCTURE DETAILS	U-73-5	
SUPERSTRUCTURE DETAILS	U-73-6	
SUPERSTRUCTURE DETAILS	U-73-7	
SUPERSTRUCTURE DETAILS	U-73-8	
PRESTRESSED I-BEAM DETAILS	U-73-9	
PRESTRESSED I-BEAM DETAILS	U-73-10	
ABUTMENT NO. 1	U-73-11	
ABUTMENT NO. 1 DETAILS	U-73-12	
ABUTMENT NO. 2	U-73-13	
ABUTMENT NO. 2 DETAILS	U-73-14	
ABUTMENT NO. 1 AND 2 DETAILS	U-73-15	
PIER NO. 1	U-73-16	9-16-15
PIER NO. 2	U-73-17	
PIER NO. 1 AND 2 DETAILS	U-73-18	
FINAL FOUNDATION DATA	U-73-19	
BILL OF STEEL	U-73-20	9-16-15

LIST OF STANDARD DRAWINGS

	DWG. NO.	LAST REV. DATE
BRIDGE RAILING SINGLE SLOPE CONCRETE PARAPET	STD-1-1SS	05-01-14
PAVEMENT AT BRIDE ENDS	STD-1-5	03-26-14
BRIDGE END DRAIN WITH PAVEMENT @ BRIDGE ENDS	STD-1-6	04-28-97
BRIDGE END DRAIN WITH PAVEMENT @ BRIDGE ENDS	STD-1-7	08-24-11
BRIDGE END DRAIN 2'-0" × 8'-7" WITH PAVEMENT @ BRIDGE ENDS	STD-1-8	05-01-95
STD. PRECAST PRESTRESSED BRIDGE DECK PANELS GENERAL DETAILS	STD-4-1	04-08-05
STD. PRECAST PRESTRESSED BRIDGE DECK PANELS DESIGN CRITERIA	STD-4-2	04-08-05
STD. PRECAST PRESTRESSED BRIDGE DECK PANELS GENERAL DETAILS	STD-4-3	03-02-02
STD. PRECAST PRESTRESSED BRIDGE DECK PANELS CONSTRUCTION DETAILS	STD-4-4	06-10-96
STANDARD PILE DETAILS	STD-5-1	10-25-93
STANDARD PILE DETAILS	STD-5-2	05-01-14
STANDARD SEISMIC DETAILS	STD-6-1	11-01-10
STANDARD SEISMIC DETAILS	STD-6-2	11-07-94
REINF. BAR SUPPORT DETAILS FOR CONC. SLABS	STD-9-1	10-07-08
MISCELLANEOUS ABUTMENT & DRAINAGE DETAILS	STD-10-1	04-08-05
STD. DETAILS AND INTERMEDIATE DIAPHRAGM DETAILS FOR I-BEAMS	STD-14-2	11-01-10

LIST OF SPECIAL PROVISIONS

	PROV. NO.	LAST REV. DATE
REGARDING BRIDGE DECK CRACK SEALING	604CR	02-19-96

LIST OF REFERENCE DRAWINGS

EXISTING - B-2-16, B-6-76, C-10-6, C-10-7, C-8-75

2034 ADT = 2,640
ROADWAY = 40'-0" WITH STD-1-1SS PARAPET
DESIGN SPEED = 60 MPH

NOTE: ANY WORK WITHIN THE STREAM CHANNEL AREA (E.G., FOR PIER FOOTING, RIP-RAP PLACEMENT, MULTI-BARREL CULVERT/BRIDGE CONSTRUCTION, ETC.) SHALL BE SEPARATED FROM FLOWING WATER OR EXPECTED FLOW PATH AND PERFORMED DURING LOW FLOW CONDITIONS. ALL ITEMS USED WITHIN THE STREAM CHANNEL AREA FOR DIVERSION OF FLOW (OR EXPECTED FLOW), UNLESS SPECIFIED IN THE PLANS, SHALL NOT BE PAID FOR DIRECTLY BUT SHALL BE INCLUDED IN THE COST OF OTHER ITEMS. THIS NOTE EXCLUDES ANY ITEMS SPECIFIED IN THE PLANS FOR THE TEMPORARY DIVERSION CHANNELS, EC-STR-31 AND TEMPORARY DIVERSION CULVERTS, EC-STR-32 FOR SINGLE BARREL CULVERT CONSTRUCTION.

HYDRAULIC DATA

DRAINAGE AREA = 22.96 MI²
DESIGN DISCHARGE (100 YR.) = 10,100 CFS
WATER AREA PROVIDED BELOW EL. 754.65 = 1009.60 FT²
100 YR. VELOCITY = 10.00 FPS
100 YR. BRIDGE BACKWATER = 1.38 FT @ EL. 755.45
ROADWAY OVERTOPPING EL. 759.63 FT.
500 YR. DISCHARGE = 12,800 CFS @ EL. 756.96

09/16/15

BIDDIE N. BROOKS, JR. — TENNESSEE — STATE OF TENNESSEE

BRIDGE NO. 1
STATE OF TENNESSEE
DEPARTMENT OF TRANSPORTATION

LAYOUT OF BRIDGE
STATE ROUTE 130
OVER
SUGAR CREEK
BRIDGE I.D. NO. 02SR1300013
STATION 439+20.00
LOG MILE 8.30
BEDFORD COUNTY
2015

CORRECT — ENGINEER OF STRUCTURES

DESIGNED BY	SCOTT STEPP (KE)	DATE	04-15
DRAWN BY	M. DYE	DATE	07-15
SUPERVISED BY	MBC/HMB/JKZ	DATE	07-15
CHECKED BY	SCOTT STEPP	DATE	07-15

U-73-1

TEMPORARY MEDIAN BARRIER = 258 L.F. CLASS 'C' RIP RAP = 2,515 TONS