SS1099F.DGN

CONSTRUCTION NO. 58100-3165-94

TYPE	YEAR	PROJECT NO.	SHEET NO.
CONST.	2014	BR-1-24-2(142)	2

1 REV.: 5-30-14; TCJ; REVISED STEEL QUANTITIES AND REVISION DATE.

2 REV.: 6-12-14; TCJ; REVISED NOTES AND REVISION DATE.

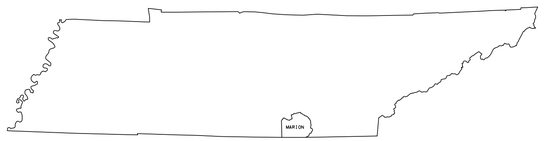

MARION COUNTY

X081

MURPHY HOLLOW ROAD
OVER INTERSTATE 24

CONTINUOUS
PRECAST PRESTRESSED
CONCRETE 54" BULB-TEE
WITH COMPOSITE CONCRETE
DECK SLAB

TWO SPANS:
SPAN NO. 1 = 115'-6"
SPAN NO. 2 = 115'-6"

TOTAL LENGTH = 231'-0"

28'-6" ROADWAY WITH
STD-1-1SS PARAPET

60°00'00"

LAYOUT DRAWING NO.
U-66-1

ESTIMATED QUANTITIES

ITEM NO.	DESCRIPTION	UNIT	TOTAL
202-04.01	REMOVAL OF STRUCTURES (BRIDGE NO. 58-A261-0.07)	L.S.	1
204-02.01	DRY EXCAVATION (BRIDGES)	C.Y.	216
303-01.02	GRANULAR BACKFILL (BRIDGES)	TON	47
604-02.03	EPOXY COATED REINFORCING STEEL 1	LB.	51,985
604-03.01	CLASS A CONCRETE (BRIDGES)	C.Y.	204
604-03.02	STEEL BAR REINFORCEMENT (BRIDGES) 1	LB.	32,617
604-03.09	CLASS D CONCRETE (BRIDGE DECK)	C.Y.	197
604-04.01	APPLIED TEXTURE FINISH (NEW STRUCTURES)	S.Y.	2,121
606-03.03	STEEL PILES (12 INCH)	L.F.	1,490
606-03.06	PILE TIPS (STEEL PILE, 12 INCH)	EA.	34
615-01.10	PRESTRESSED CONCRETE BULB TEE BEAM (6" WEB)(BT-54)	L.F.	900
617-02	BRIDGE DECK CRACK SEALING	L.F.	462
617-05	SEALANT (HMWM)	GAL.	4
620-05.01	CONCRETE PARAPET SINGLE SLOPE (STD-1-1SS)	L.F.	544
710-09.01	6" PERFORATED PIPE WITH VERTICAL DRAIN SYSTEM	L.F.	123
710-09.02	6" PIPE UNDERDRAIN	L.F.	36

FOOTNOTE: SEE DRAWING NO. U-66-2

LIST OF STANDARD DRAWINGS	DWG. NO.	LAST 1 REV. DATE
BRIDGE RAILING SINGLE SLOPE CONCRETE PARAPET	STD-1-1SS	5-01-14
SLIDER PLATES AND DECK DRAINS	STD-1-2	3-28-08
REINFORCED CONCRETE PAVEMENT AT BRIDGE ENDS	STD-1-5	6-01-11
BRIDGE END DRAIN DETAILS 2'x8'-7" & 4'x8'-7" WITH PAVEMENT AT BRIDGE ENDS	STD-1-6	4-28-97
BRIDGE END DRAIN DETAILS 2'x8'-7" & 4'x8'-7" WITH PAVEMENT AT BRIDGE ENDS	STD-1-7	8-24-11
BRIDGE END DRAIN DETAILS 2'x8'-7" WITH PAVEMENT AT BRIDGE ENDS	STD-1-8	5-01-95
STD. PRECAST PRESTRESSED BRIDGE DECK PANELS GENERAL DETAILS	STD-4-1	4-08-05
STD. PRECAST PRESTRESSED BRIDGE DECK PANELS DESIGN CRITERIA	STD-4-2	4-08-05
STD. PRECAST PRESTRESSED BRIDGE DECK PANELS GENERAL DETAILS	STD-4-3	3-02-02
STD. PRECAST PRESTRESSED BRIDGE DECK PANELS CONSTRUCTION DETAILS	STD-4-4	6-10-96
STD. PILE DETAILS	STD-5-1	10-25-93
STD. PILE DETAILS	STD-5-2	5-01-14
STANDARD SEISMIC DETAILS	STD-6-1	11-01-10
STANDARD SEISMIC DETAILS	STD-6-2	11-07-94
REINF. BAR SUPPORT DETAILS FOR CONC. SLABS	STD-9-1	10-07-08
MISCELLANEOUS ABUTMENT & DRAINAGE DETAILS	STD-10-1	4-08-05
STD. DETAILS AND INT. DIAPH. DETAILS FOR BULB-TEE BEAMS	STD-14-1	5-01-14
SAFETY APPROACH TO UNDERPASSES GRADING DESIGN AND SLOPE PROTECTION	RD01-SA-1	10-15-02

LIST OF SPECIAL PROVISIONS	PROV. NO.	REV. DATE
REPAIR OF BRIDGE DECK CRACKS	604CR	02-19-96

LIST OF DRAWINGS	DWG. NO.	LAST 1 2 REV. DATE
LAYOUT OF BRIDGE	U-66-1	6-12-14
THRU		
BILL OF STEEL	U-66-20	5-30-14

STATE OF TENNESSEE
DEPARTMENT OF TRANSPORTATION

ESTIMATED
BRIDGE
QUANTITIES

LAY1099.DGN

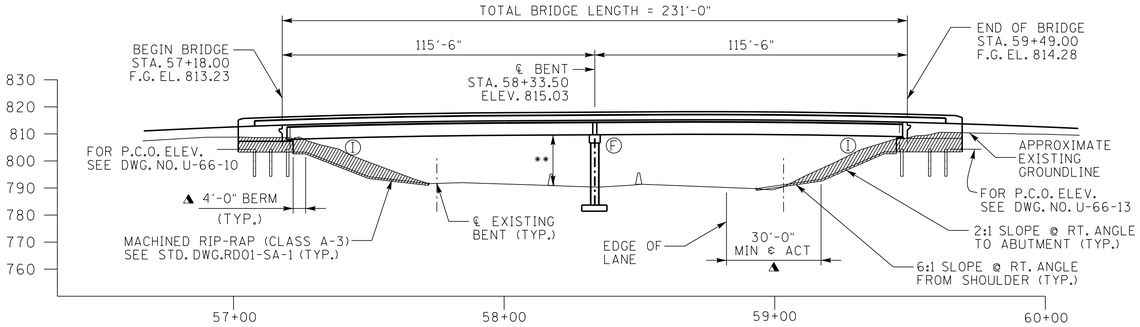

Ⓘ DENOTES INTEGRAL

Ⓕ DENOTES FIXED

** DENOTES: MIN. REQ'D. VERT. CLR. = 16'-6"
PROPOSED VERT. CLR. = 17'-11"
MURPHY HOLLOW RD STA. 58+18.07
I-24 STA. 295+12.60

▲ DENOTES: MEASURED @ RT. ANGLE FROM SKEW

DENOTES AREA TO BE EXCAVATED BY ROADWAY

ELEVATION

SCALE: 1" = 30'-0"

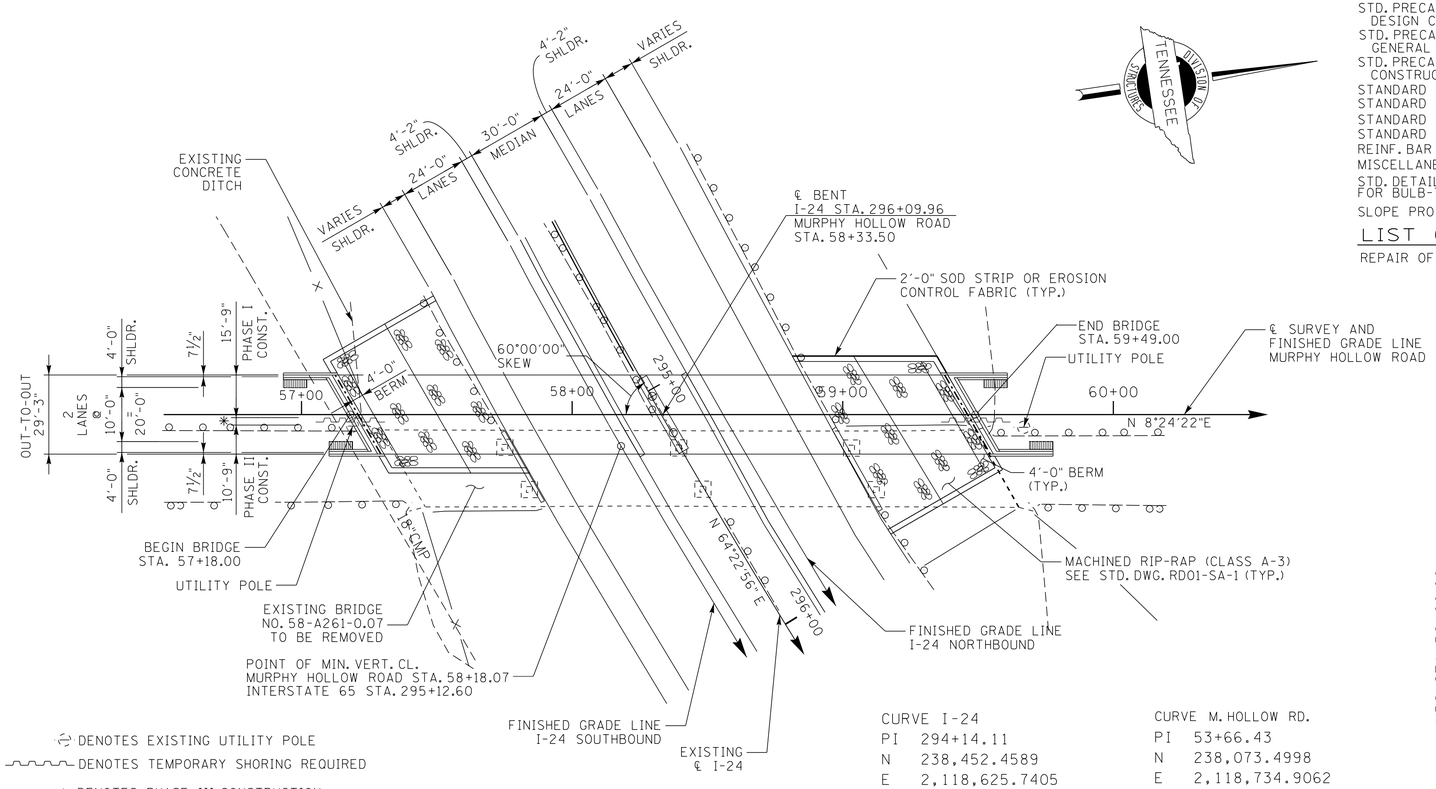

DENOTES EXISTING UTILITY POLE

DENOTES TEMPORARY SHORING REQUIRED

✱ DENOTES: PHASE III CONSTRUCTION
2'-9" CLOSURE POUR SLAB ONLY

DENOTES: 2'-0" X 8'-7" END OF DRAIN
SEE STD-1-10, 11 & 12.

PLAN

SCALE: 1" = 30'-0"

CURVE I-24	
PI	294+14.11
N	238,452.4589
E	2,118,625.7405
Δ	17° 30' 21" (LT)
D	2° 11' 40"
R	2,611.00
L	797.75
T	402.01
SE 0.069 FT/FT	
DESIGN SPEED 70 MPH	
TRANS. LENGTH 268'	

CURVE M. HOLLOW RD.	
PI	53+66.43
N	238,073.4998
E	2,118,734.9062
Δ	30° 45' 44" (RT)
D	6° 21' 58"
R	900.00
L	483.21
T	247.58
SE 0.078 FT/FT	
DESIGN SPEED 50 MPH	
TRANS. LENGTH 237'	

DESIGNED BY	T. JOHNSON	DATE	5-13
DRAWN BY	T. JOHNSON/D. E.	DATE	2-14
SUPERVISED BY	J.W.F./T.E.H.	DATE	2-14
CHECKED BY	TERI JOHNSON	DATE	3-14

LIST OF DRAWINGS

	DWG. NO.	LAST REV. DATE
LAYOUT OF BRIDGE	U-66-1	5-30-14
GENERAL NOTES AND ESTIMATED QUANTITIES	U-66-2	5-30-14
FOUNDATION DATA	U-66-3	
FOUNDATION DATA	U-66-4	
SUPERSTRUCTURE	U-66-5	5-30-14
SUPERSTRUCTURE DETAILS	U-66-6	
SUPERSTRUCTURE DETAILS	U-66-7	6-12-14
SUPERSTRUCTURE DETAILS	U-66-8	
PRESTRESSED BULB-TEE BEAM DETAILS	U-66-9	5-30-14
ABUTMENT NO. 1	U-66-10	
ABUTMENT NO. 1 DETAILS	U-66-11	
ABUTMENT NO. 1 DETAILS	U-66-12	
ABUTMENT NO. 2	U-66-13	
ABUTMENT NO. 2 DETAILS	U-66-14	
ABUTMENT NO. 2 DETAILS	U-66-15	
BENT NO. 1	U-66-16	5-30-14
BENT NO. 1 DETAILS	U-66-17	5-30-14
FINAL FOUNDATION DATA	U-66-18	
BILL OF STEEL	U-66-19	5-30-14
BILL OF STEEL	U-66-20	5-30-14

LIST OF STANDARD DRAWINGS

	DWG. NO.	LAST REV. DATE
BRIDGE RAILING SINGLE SLOPE CONCRETE PARAPET	STD-1-1SS	05-01-14
BRIDGE END DRAIN W/O PAVEMENT AT BRIDGE END	STD-1-10	03-28-94
BRIDGE END DRAIN W/O PAVEMENT AT BRIDGE END	STD-1-11	08-24-11
BRIDGE END DRAIN 2' X 8'-7" W/O PAVEMENT AT BRIDGE END	STD-1-12	03-28-94
BRIDGE MOUNTED INTERCONNECTED PORTABLE BARRIER RAIL	STD-2-1	11-01-10
STD. PRECAST PRESTRESSED BRIDGE DECK PANELS GENERAL DETAILS	STD-4-1	04-08-05
STD. PRECAST PRESTRESSED BRIDGE DECK PANELS DESIGN CRITERIA	STD-4-2	04-08-05
STD. PRECAST PRESTRESSED BRIDGE DECK PANELS GENERAL DETAILS	STD-4-3	03-02-02
STD. PRECAST PRESTRESSED BRIDGE DECK PANELS CONSTRUCTION DETAILS	STD-4-4	06-10-96
STANDARD PILE DETAILS	STD-5-1	10-25-93
STANDARD PILE DETAILS	STD-5-2	05-01-14
STANDARD SEISMIC DETAILS	STD-6-1	11-01-10
STANDARD SEISMIC DETAILS	STD-6-2	11-07-94
REINF. BAR SUPPORT DETAILS FOR CONC. SLABS	STD-9-1	10-07-08
MISCELLANEOUS ABUTMENT & DRAINAGE DETAILS	STD-10-1	04-08-05
STD. DETAILS AND INT. DIAPH. DETAILS FOR BULB-TEE BEAMS	STD-14-1	05-01-14
SLOPE PROTECTION	RD01-SA-1	10-15-02

LIST OF SPECIAL PROVISIONS

	PROV. NO.	REV. DATE
REPAIR OF BRIDGE DECK CRACKS	604CR	02-19-96

CONST. NO. 58100-3165-94

PROJECT NO.	YEAR	SHEET NO.
BR-I-24-2(142)	2014	

REVISIONS

NO.	DATE	BY	BRIEF DESCRIPTION
1	5-30-14	TCJ	ADDED REVISION DATE
2	6-12-14	TCJ	ADDED REVISION DATE

TIMOTHY E. HUFF
REGISTERED ENGINEER
No. 102111
STRUCTURE
COMMERCE AND INDUSTRY
STATE OF TENNESSEE

06-12-2014

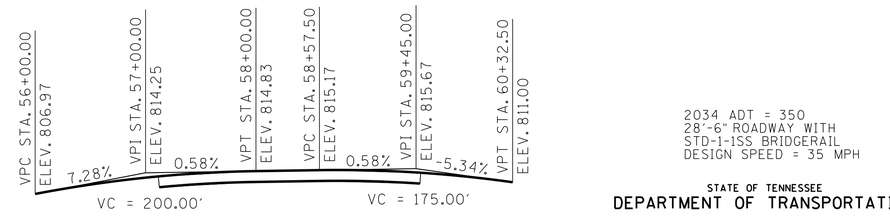

GRADE SKETCH
INTERSTATE 24 NORTHBOUND

GRADE SKETCH
INTERSTATE 24 SOUTHBOUND

GRADE SKETCH
RELOCATED MURPHY HOLLOW ROAD

2034 ADT = 350
28'-6" ROADWAY WITH
STD-1-1SS BRIDGERAIL
DESIGN SPEED = 35 MPH

STATE OF TENNESSEE
DEPARTMENT OF TRANSPORTATION

LAYOUT OF BRIDGE
MURPHY HOLLOW ROAD
OVER INTERSTATE 24
STATION 58+33.50
MARION COUNTY
2014

CORRECT Wayne J. Seger
ENGINEER OF STRUCTURES

U-66-1

RIP-RAP CLASS 'A-3' = 249 TONS

GN1099.DGN

GENERAL NOTES

SPECIFICATIONS: STANDARD ROAD AND BRIDGE SPECIFICATIONS OF THE TENNESSEE DEPARTMENT OF TRANSPORTATION (MARCH 1, 2006 EDITION).

LOADING: HL-93 LIVE LOADING; SEISMIC CATEGORY WITH A_S = 0.150g, S_{DS}= 0.287g, S_{D1}= 0.117g, (1000 YEAR RETURN PERIOD). DEAD LOAD INCLUDES 35 lb/sq. ft. FOR FUTURE WEARING SURFACE.

DESIGN SPECIFICATIONS: AASHTO LRFD SIXTH EDITION 2012 WITH ADDENDA

CONCRETE: TO BE CLASS "A" f'_C = 3000 PSI, EXCEPT AS NOTED OTHERWISE.

CLASS "D" f'c = 4000 PSI CONCRETE FOR BRIDGE DECKS SHALL BE IN ACCORDANCE WITH SECTION 604 OF THE STANDARD SPECIFICATIONS.

BRIDGE DECK SURFACE FINISH: TO BE IN ACCORDANCE WITH NOTE "A" IN ARTICLE 604.22 OF THE STANDARD SPECIFICATIONS.

2 BRIDGE DECK FORMS: BRIDGE DECK FORMS FOR CONCRETE DECKS SHALL BE CONSTRUCTED USING EITHER REMOVABLE FORMS OR PERMANENT FORMS. PERMANENT FORMS SHALL BE REMAIN-IN-PLACE STEEL PANELS. IN EITHER CASE, FORMS SHALL BE ATTACHED BY MEANS OTHER THAN WELDING TO MAIN STRUCTURAL MEMBERS OR REINFORCING STEEL. TEMPORARY ERECTION DIAPHRAGMS MUST BE USED AT THE ENDS OF PRECAST CONCRETE GIRDERS WHERE SUPPORT DIAPHRAGMS OR ABUTMENT BACKWALLS ARE TO BE POURED CONCURRENTLY WITH THE DECK AND SHALL BE PROVIDED ELSEWHERE IN ACCORDANCE WITH THE SPECIFICATIONS TO PREVENT GIRDER ROTATION. SEE STANDARD DRAWINGS STD-4-1 THRU 4, STD-14-1 AND ARTICLE 604.05 OF THE STANDARD SPECIFICATIONS.

SLAB OVERHANGS SUPPORTED BY BULB-TEE BEAMS: IT IS RECOMMENDED THAT SPACING OF OVERHANG BRACKETS FOR BULB-TEE BEAMS NOT EXCEED 2'-0" CENTER TO CENTER.

REINFORCING STEEL: SHALL BE ASTM A615 GRADE 60, UNLESS NOTED OTHERWISE. SEE SECTION 604 AND 907 OF THE STANDARD SPECIFICATIONS.

BRIDGE RAIL SYSTEM: BUILD BRIDGE RAILINGS ACCORDING TO STANDARD DRAWING STD-1-1SS. THE RAILING SHALL BE FORMED AND CAST PLUMB, NOT PERPENDICULAR TO THE SLAB. THE DIMENSIONS AT THE TRAFFIC FACE SHALL BE KEPT CONSTANT, WITH VARIATION DUE TO CROSS SLOPE ACCOMMODATED AT THE REAR FACE.

PILES: TO BE HP 12 X 53, GRADE 50 DRIVEN TO A MINIMUM BEARING OF 97 TONS OR REFUSAL ON ROCK FOR THE ABUTMENTS AND BENT.

NOTE: THE CONTRACTOR SHALL PROVIDE 100% CONVENTIONAL FALL PROTECTION FOR WORKERS INSTALLING DECKING ABOVE 15 FEET.

SHOP DRAWINGS: SEE SECTION 105.02 OF THE STANDARD SPECIFICATIONS.

MACHINED RIP-RAP FOR SLOPE PROTECTION: SHALL BE CLASS A-3 AND MEET QUALITY REQUIREMENTS OF SECTION 709 OF TDOT STANDARD CONSTRUCTION SPECIFICATIONS AND SHALL BE PAID FOR UNDER ROADWAY ITEM 709-05.05-TON.

VALUE ENGINEERING ALTERNATE BRIDGE DESIGN CRITERIA: ALTERNATE BRIDGE DESIGN PROPOSALS MAY NOT DIMINISH THE FUNCTIONAL OR STRUCTURAL EQUIVALENCY OF THE BRIDGE AND MUST MEET OR EXCEED BOTH THE SERVICE LEVEL AND ULTIMATE CAPACITIES OF THE CONTRACT PLANS STRUCTURE. ADDITIONALLY, THE WATERWAY OPENING AND FLOOD CLEARANCES MAY NOT BE REDUCED; FOR GRADE SEPARATIONS, THE HORIZONTAL CLEARANCES MAY NOT BE REDUCED, NOR MAY THE VERTICAL CLEARANCES BE LESS THAN THE MINIMUM ACCEPTABLE FOR THE TYPE FACILITY CROSSED.

FINISHING CONCRETE SURFACES: CONCRETE FINISHING SHALL BE IN ACCORDANCE WITH SECTION 604.21 OF THE TENNESSEE STANDARD SPECIFICATION. A CLASS I FINISH FOLLOWED BY AN APPLIED TEXTURE FINISH SHALL BE USED IN LIEU OF A CLASS II FINISH. NO TEXTURE FINISH SHALL BE APPLIED PRIOR TO COMPLETION OF PAVING AND HAULING OPERATIONS AT THE BRIDGE SITE. THE APPLIED TEXTURE FINISH SHALL BE MEASURED AND PAID FOR UNDER ITEM 604-04.01.

REQUIREMENTS AND RESTRICTIONS FOR PHASE CONSTRUCTION

1. THE STAGE CONSTRUCTION SEQUENCE MAY PROHIBIT THE EXTRACTION OF SOME COFFERDAM SHEET PILING. ALL COSTS ASSOCIATED WITH SHEET PILING SHALL BE IN THE LUMP SUM BID FOR FOUNDATION PREPARATION.
2. THE LOCATION OF LONGITUDINAL CONSTRUCTION JOINTS SHALL NOT BE CHANGED TO ACCOMODATE REMAIN IN PLACE DECK FORMS.
3. NO SHEET PILES OR BEARING PILES MAY BE DRIVEN FROM THE EXISTING OR PROPOSED STRUCTURE.
4. ONE 10 FOOT TRAFFIC LANE SHALL BE MAINTAINED DURING PHASE II CONSTRUCTION.
5. TRAFFIC SHALL BE MAINTAINED ON EXISTING BRIDGE UNTIL COMPLETION OF PHASE 1.

NOTE: PRE-DRILLING IS REQUIRED FOR ALL PILES (SEE TDOT STANDARD SPECIFICATIONS, ARTICLE 606.12). MINIMUM TIP ELEVATIONS FOR REFUSAL ARE: 750' FOR ABUTMENT NO. 1, 755' FOR BENT NO. 1 AND 761' FOR ABUTMENT NO. 2. AFTER ALL PILES HAVE BEEN INSTALLED AT A GIVEN FOOTING, RESTRIKE IS REQUIRED FOR EVERY PILE IN THAT FOOTING TO VERIFY THAT NO ADDITIONAL SETTLEMENT OCCURS. SHOULD ADDITIONAL SETTLEMENT OCCUR, CONTINUED DRIVING TO REFUSAL WILL BE REQUIRED.

CONST. NO. 58100-3165-94

PROJECT NO.	YEAR	SHEET NO.
BR-1-24-2(142)	2014	

REVISIONS

NO.	DATE	BY	BRIEF DESCRIPTION
1	5-30-14	TCJ	REVISED STEEL QUANTITIES
2	6-12-14	TCJ	REVISED NOTE

ESTIMATED QUANTITIES

	ITEM NO.	DESCRIPTION	UNIT	TOTAL	SUPERSTRUCTURE	ABUT. NO. 1	BENT NO. 1	ABUT. NO. 2
1	202-04.01	REMOVAL OF STRUCTURES (BRIDGE NO. 58-A261-0.07)	L.S.	1				
2	204-02.01	DRY EXCAVATION (BRIDGES)	C.Y.	216		69	74	73
7	303-01.02	GRANULAR BACKFILL (BRIDGES)	TON	47		20		27
9	604-02.03	EPOXY COATED REINFORCING STEEL 1	LB.	51,985	49,231	1,377		1,377
8	604-03.01	CLASS A CONCRETE (BRIDGES)	C.Y.	204		63	65	76
9	604-03.02	STEEL BAR REINFORCEMENT (BRIDGES) 1	LB.	32,617	715	6,997	17,607	7,298
	604-03.09	CLASS D CONCRETE (BRIDGE DECK)	C.Y.	197	197			
	604-04.01	APPLIED TEXTURE FINISH (NEW STRUCTURES)	S.Y.	2,121				
	606-03.03	STEEL PILES (12 INCH)	L.F.	1,490		600	500	390
12	606-03.06	PILE TIPS (STEEL PILE, 12 INCH)	EA.	34		9	16	9
3 5	615-01.10	PRESTRESSED CONCRETE BULB TEE BEAM (6" WEB)(BT-54)	L.F.	900				
10	617-02	BRIDGE DECK CRACK SEALING	L.F.	462				
11	617-05	SEALANT (HMWM)	GAL.	4				
	620-05.01	CONCRETE PARAPET SINGLE SLOPE (STD-1-1SS)	L.F.	544				
6	710-09.01	6" PERFORATED PIPE WITH VERTICAL DRAIN SYSTEM	L.F.	123		59		64
	710-09.02	6" PIPE UNDERDRAIN	L.F.	36		18		18

1 NOTE: LUMP SUM: EXISTING BRIDGE CONSISTS OF FOUR SPANS AT 222'-2 3/4 " OVERALL LENGTH AND OUT-TO-OUT WIDTH OF 28'-6", CONTINUOUS DECK GIRDER BRIDGE WITH CONCRETE SUBSTRUCTURE. FOR EXISTING LAYOUT AND SECTION SEE DWG. NO. K-49-114 THRU 118, AND K-38-151, AVAILABLE UPON REQUEST.

2 EXCAVATION BASED ON FINAL PROFILE AT ABUTMENTS AND EXISTING GROUND LINE AT THE BENT.

3 NOTE: COST OF ELASTOMERIC PADS AND RUBBER BONDING CEMENT TO BE INCLUDED IN THE UNIT PRICE BID FOR THE PRESTRESSED BEAM.

4 NOTE: THE COST OF BITUMINOUS-FIBERBOARD, AND ALL MISCELLANEOUS JOINT MATERIAL TO BE INCLUDED IN THE UNIT PRICE BID FOR OTHER ITEMS.

5 NOTE: INTERMEDIATE DIAPHRAGMS SHALL BE PAID FOR IN ACCORDANCE WITH STANDARD DRAWING STD-14-1.

6 NOTE: COST OF POLYETHYLENE SHEETING AND ALL MISCELLANEOUS ITEMS NECESSARY FOR INSTALLATION TO BE INCLUDED IN THE UNIT PRICE BID FOR PERFORATED PIPE.

7 NOTE: GRANULAR BACKFILL SHALL BE CLASS "A" GRADING "D" MATERIAL. SEE STANDARD DRAWING STD-10-1.

8 NOTE: THE COST OF ALL MATERIALS AND LABOR NECESSARY FOR THE INSTALLATION OF 12 ANCHOR BOLT ASSEMBLIES SHALL BE INCLUDED IN THE UNIT PRICE BID FOR ITEM 604-03.01, CLASS "A" CONCRETE (BRIDGES).

9 NOTE: MECHANICAL BAR SPLICERS MUST BE ON THE APPROVED LIST, DIVISION OF MATERIALS AND TEST, AND SHALL MEET AASHTO LRFD SPECIFICATIONS FOR MECHANICAL CONNECTION. THE COST OF FURNISHING BAR SPLICERS, INCLUDING ALL MATERIAL AND LABOR FOR FULL INSTALLATION, SHALL BE INCLUDED IN THE UNIT PRICE BID FOR ITEM NO'S. 604-02.03 AND 604-03.02.

10 NOTE: INCLUDES ALL COSTS FOR INSTALLING THE BRIDGE DECK CRACK SEALER (HMWM) INCLUDING CRACK PREPARATION, CLEANING, LABOR, SAND, AND ALL MISCELLANEOUS MATERIAL REQUIRED TO SEAL CRACK ALONG THE LONGITUDINAL PHASE CONSTRUCTION JOINT FROM BEGINNING OF BRIDGE TO THE END OF BRIDGE ACCORDING TO SPECIAL PROVISION 604CR AND THE MANUFACTURER'S SPECIFICATIONS. THIS ITEM DOES NOT INCLUDE THE COST OF FURNISHING THE BRIDGE DECK CRACK SEALER.

11 NOTE: INCLUDES THE COST OF FURNISHING THE SEALER MATERIAL (HMWM) FOR SEALING THE CRACK ALONG THE LONGITUDINAL PHASE CONSTRUCTION JOINT FROM BEGINNING OF BRIDGE TO THE END OF THE BRIDGE. THE SEALER (HMWM) SHALL BE IN ACCORDANCE WITH SPECIAL PROVISION 604CR. QUANTITIES FOR THIS ITEM MAY BE INCREASED OR DECREASED BY THE TDOT ENGINEER.

12 NOTE: THE UNIT PRICE BID FOR THE CAST STEEL POINTS SHALL INCLUDE FURNISHING AND INSTALLATION TO THE PILES.

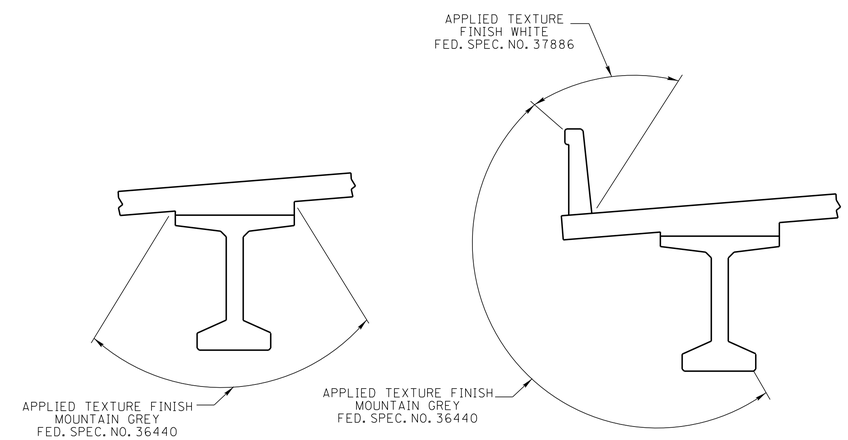

APPLIED TEXTURE FINISH SKETCH

NOTE: IN ADDITION TO THE SURFACES SHOWN IN THE APPLIED TEXTURE FINISH SKETCH ALL EXPOSED SURFACES OF THE WINGWALLS, ABUTMENT BEAMS, BENTS AND EXTERIOR PORTIONS OF ENDWALLS ARE TO RECEIVE AN APPLIED TEXTURE FINISH (MOUNTAIN GREY, FED. SPEC. NO. 36440).

TIMOTHY E. HUFF — REGISTERED ENGINEER — AGRICULTURE — COMMERCE — No. 100126-0067 — STATE OF TENNESSEE

06-12-2014

STATE OF TENNESSEE
DEPARTMENT OF TRANSPORTATION

GENERAL NOTES AND ESTIMATED QUANTITIES
MURPHY HOLLOW ROAD
OVER INTERSTATE 24
STATION 58+33.50
MARION COUNTY
2014

CORRECT _____ ENGINEER OF STRUCTURES

DESIGNED BY	T. JOHNSON	DATE	5-13
DRAWN BY	D. EASTERLY	DATE	2-14
SUPERVISED BY	J.W.F./T.E.H.	DATE	2-14
CHECKED BY	TERI JOHNSON	DATE	3-14

CONST. NO. 58100-3165-94

PROJECT NO.	YEAR	SHEET NO.
BR-I-24-2(142)	2014	

REVISIONS

NO.	DATE	BY	BRIEF DESCRIPTION

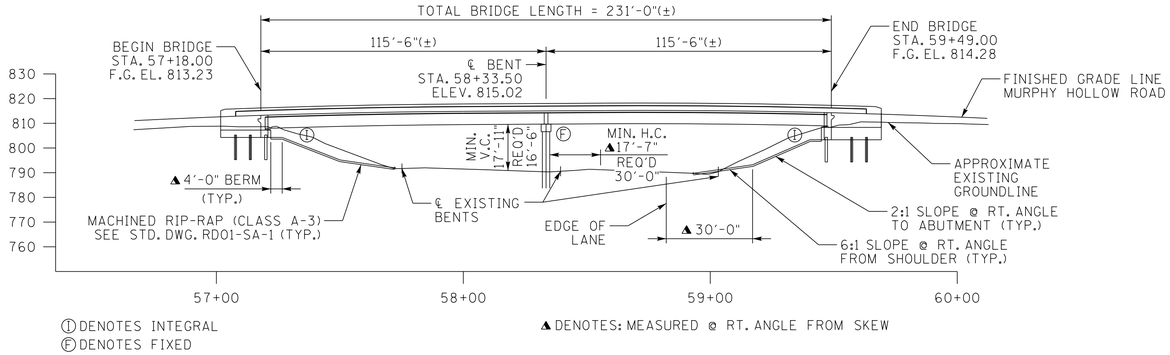

ELEVATION
SCALE 1" = 30'-0"

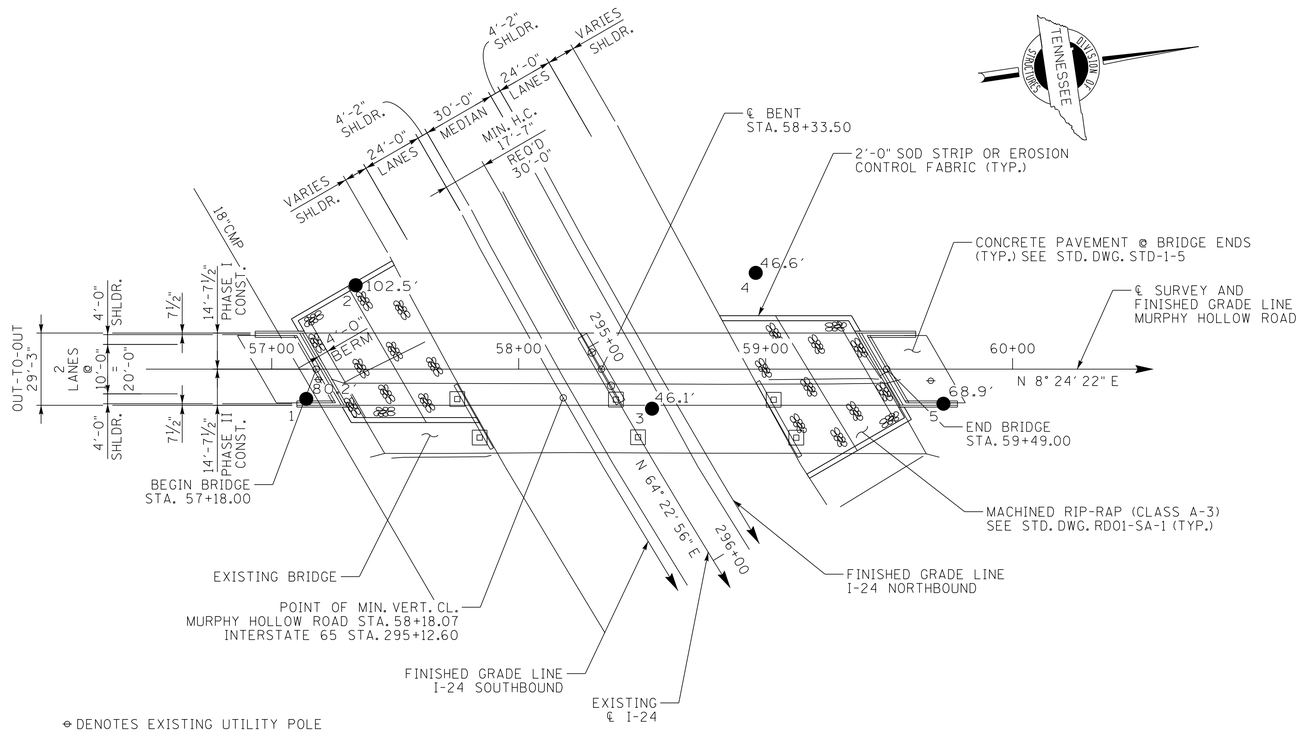

⊖ DENOTES EXISTING UTILITY POLE

PLAN
SCALE 1" = 30'-0"

BENCH MARKS

XCP GPS 58-A261-01
STA 57+03.09
OFF 2.22'(RT)
N 238418.2890
E 2118794.1670
ELEV 810.87
ALUM. DISK

XCP GPS 58-A261-02
STA 54+53.85
OFF 7.16'(LT)
N 238171.1870
E 2118756.6610
ELEV 795.82
ALUM. DISK

REQUIRED DATA:
1) SUFFICIENT GROUND, ROCK, AND CORING INFORMATION FOR BRIDGE FOUNDATION.
2) APPROXIMATE EXISTING GROUND AND ROCK LINES.

SEISMIC DESIGN DATA
LATITUDE 34° 59' 16" N
LONGITUDE 85° 29' 53" W
SITE CLASS "C"
As = 0.150
SDs = 0.287
SD1 = 0.117
SEISMIC ZONE 1
7% PROBABILITY OF EXCEEDANCE IN 75 YEARS

2036 ADT = 350
28'-6" ROADWAY WITH
STD-1-1SS BRIDGERAILS
DESIGN SPEED = 50 MPH

NOTE: THIS DRAWING IS FOR FOUNDATION DATA ONLY AND IS NOT TO BE USED AS A LAYOUT.

STA. 294+00.00	STA. 294+50.00	STA. 295+00.00	STA. 295+50.00	STA. 296+00.00
ELEV. 788.82	ELEV. 789.76	ELEV. 790.77	ELEV. 791.78	ELEV. 792.75

GRADE SKETCH
INTERSTATE 24 NORTHBOUND

STA. 294+00.00	STA. 294+50.00	STA. 295+00.00	STA. 295+50.00	STA. 296+00.00
ELEV. 789.32	ELEV. 790.23	ELEV. 791.19	ELEV. 792.34	ELEV. 793.37

GRADE SKETCH
INTERSTATE 24 SOUTHBOUND

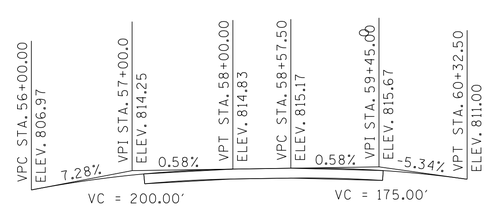

GRADE SKETCH
RELOCATED MURPHY HOLLOW ROAD

STATE OF TENNESSEE
DEPARTMENT OF TRANSPORTATION
BUREAU OF HIGHWAYS

FOUNDATION DATA
MURPHY HOLLOW ROAD
OVER INTERSTATE 24
BRIDGE I.D. 58I00240059
STATION 58+33.50
L.M. 0.07
MARION COUNTY
2014

DESIGNED BY TERI JOHNSON	DATE 11-2013	CORRECT	ENGINEER OF STRUCTURES
DRAWN BY TERI JOHNSON	DATE 11-2013		
SUPERVISED BY PAUL MILLER	DATE 11-2013		
CHECKED BY TERI JOHNSON	DATE 11-2013		

U-66-3

CONST. NO. 58100-3165-94

PROJECT NO.	YEAR	SHEET NO.
BR-I-24-2(142)	2014	

REVISIONS

NO.	DATE	BY	BRIEF DESCRIPTION

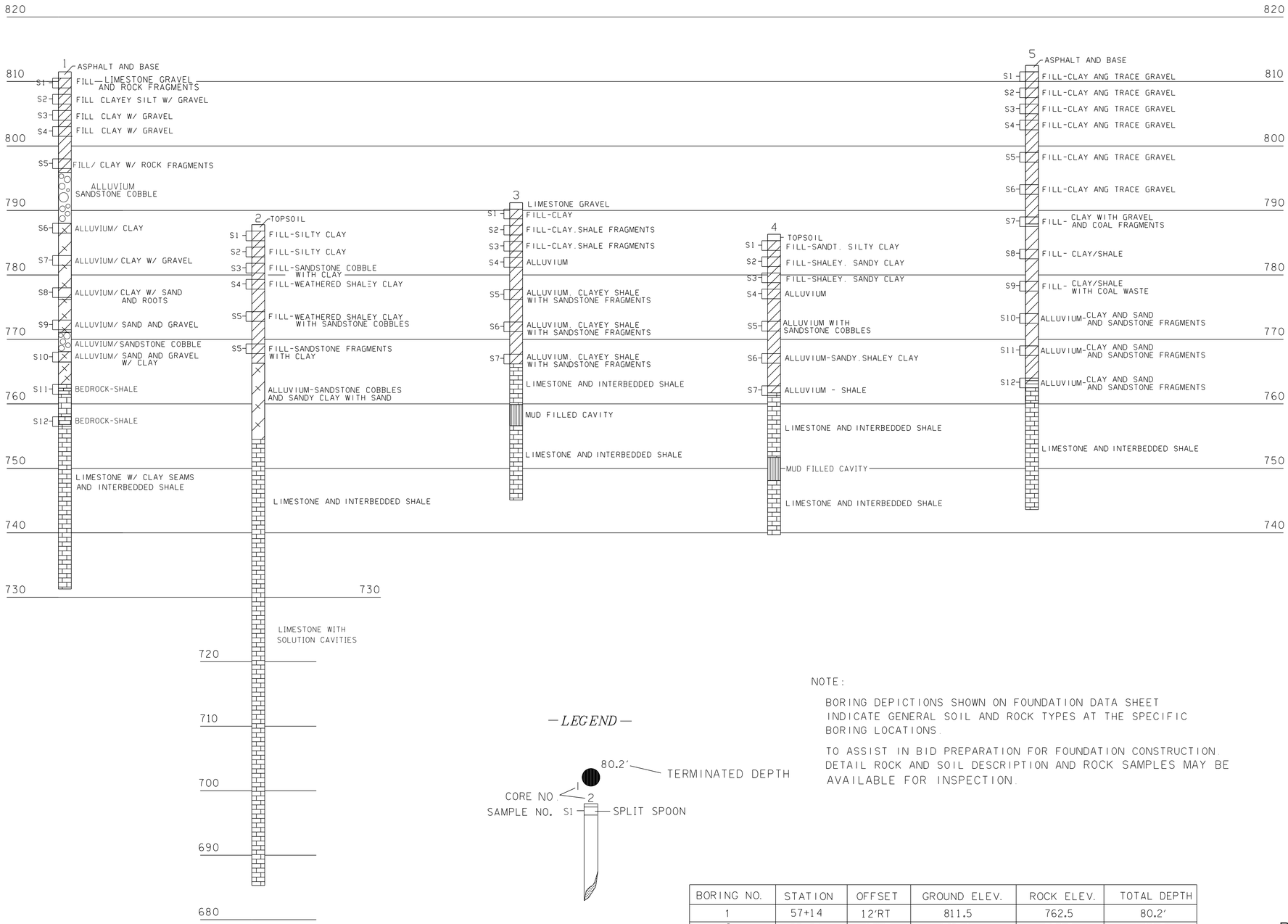

— LEGEND —

NOTE:

BORING DEPICTIONS SHOWN ON FOUNDATION DATA SHEET INDICATE GENERAL SOIL AND ROCK TYPES AT THE SPECIFIC BORING LOCATIONS.

TO ASSIST IN BID PREPARATION FOR FOUNDATION CONSTRUCTION, DETAIL ROCK AND SOIL DESCRIPTION AND ROCK SAMPLES MAY BE AVAILABLE FOR INSPECTION.

BORING NO.	STATION	OFFSET	GROUND ELEV.	ROCK ELEV.	TOTAL DEPTH
1	57+14	12'RT	811.5	762.5	80.2'
2	57+34	45'LT	787.8	754.5	102.5'
3	58+54	16'RT	791.2	766.2	46.1'
4	58+96	39'LT	786.3	762.0	46.6'
5	59+72	14'RT	812.5	763.6	68.9

STATE OF TENNESSEE
DEPARTMENT OF TRANSPORTATION
BUREAU OF HIGHWAYS

FOUNDATION DATA
MURPHY HOLLOW ROAD
OVER INTERSTATE 24
BRIDGE I.D. 58100240059
STATION 58+33.50
L.M. 0.07
MARION COUNTY
2014

DESIGNED BY TERI JOHNSON DATE 11-2013
DRAWN BY TERI JOHNSON DATE 11-2013
SUPERVISED BY PAUL MILLER DATE 11-2013
CHECKED BY TERI JOHNSON DATE 11-2013

U-66-4

SP1099F.DGN

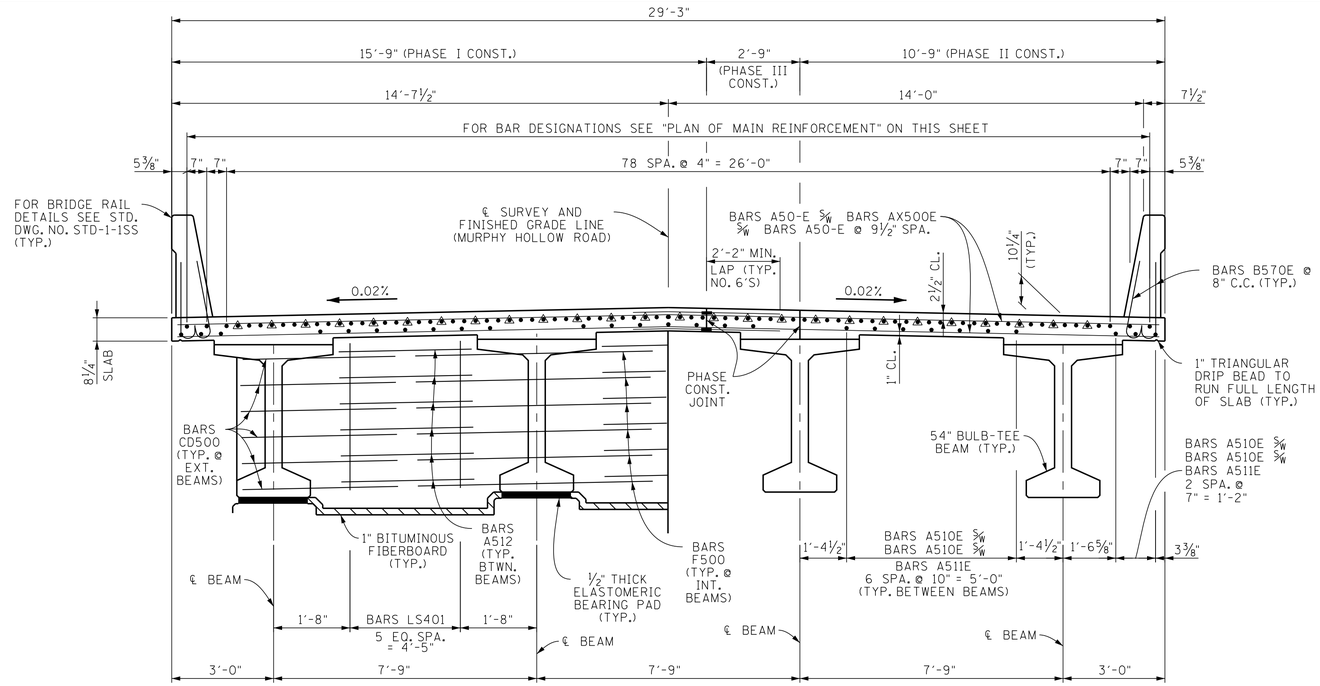

HALF-SECTION NEAR SUPPORT

HALF-SECTION NEAR MID-SPAN

TYPICAL CROSS-SECTION

(LOOKING FORWARD ON SURVEY)

DENOTES: CUT-OFF BARS

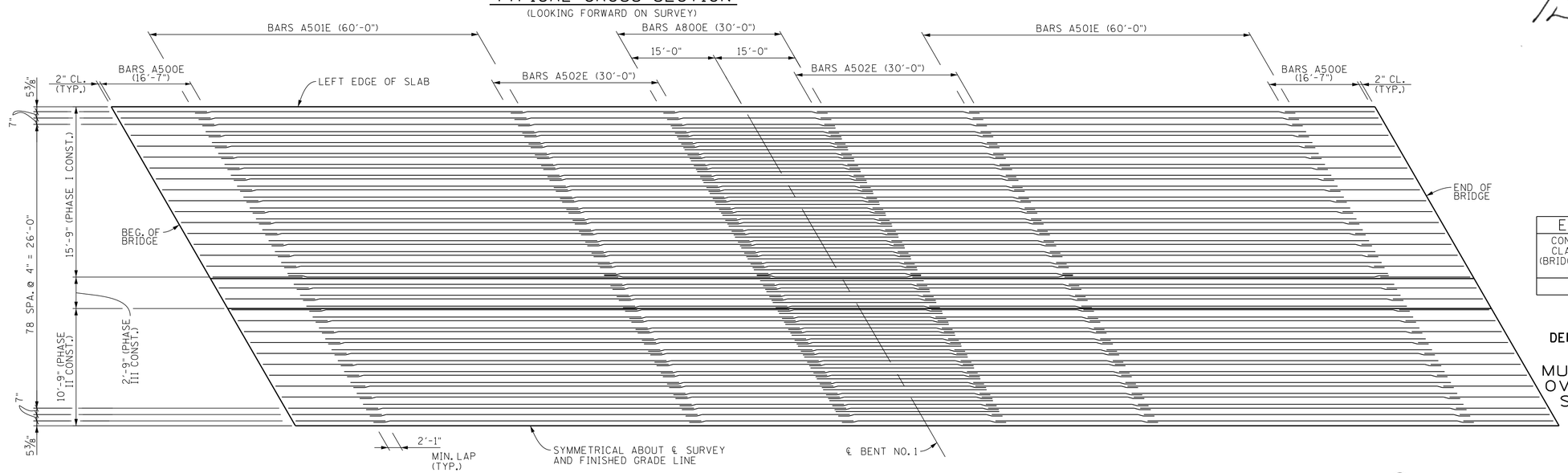

PLAN OF MAIN REINFORCEMENT

CONST. NO. 58100-3165-94

PROJECT NO.	YEAR	SHEET NO.
BR-I-24-2(142)	2014	

REVISIONS

NO.	DATE	BY	BRIEF DESCRIPTION
1	5-30-14	TJ	REVISED STEEL AND QUANTITY

NOTE: THE CONTRACTOR IS SOLELY RESPONSIBLE FOR SUPPORTING THE BEAMS TO PREVENT DAMAGE DUE TO TWISTING OR OVERTURNING DURING ALL PHASES OF CONSTRUCTION. IT IS STRONGLY RECOMMENDED THAT THE TEMPORARY ERECTION DIAPHRAGMS BE INSTALLED AND THE PERMANENT INTERMEDIATE DIAPHRAGMS BE INSTALLED PRIOR TO PLACING ANY LOADS ON THE GIRDERS. HOWEVER, TEMPORARY ERECTION DIAPHRAGMS AND PERMANENT INTERMEDIATE DIAPHRAGMS MUST BE IN PLACE IN THE SPAN AT THE TIME THE SLAB IS POURED IN SAID SPAN.

NOTE: WHEN POURING SLAB, PROVISIONS SHALL BE MADE FOR SETTING REINFORCING STEEL FOR PARAPET. THE PARAPET SHALL NOT BE POURED UNTIL THE SLAB IS POURED AND CURED. ALSO SEE DRAWING NO. STD-1-1SS.

NOTE: NO PORTION OF THE PARAPET SHALL BE POURED UNTIL THE ENTIRE DECK SLAB IS IN PLACE.

TIMOTHY E. HUFF REGISTERED ENGINEER NO. 112004 STATE OF TENNESSEE

06-11-2014

ESTIMATED QUANTITIES

CONCRETE CLASS "D" (BRIDGE DECK) C.Y.	EPOXY COATED REINFORCING STEEL LB.	REINFORCING STEEL L.B.
197	49,231	715

STATE OF TENNESSEE
DEPARTMENT OF TRANSPORTATION
SUPERSTRUCTURE
MURPHY HOLLOW ROAD
OVER INTERSTATE 24
STATION 58+33.50
MARION COUNTY
2014

DESIGNED BY TERI JOHNSON DATE 03-14
DRAWN BY KEVIN MARTINKO DATE 03-14
SUPERVISED BY FIELDS/HUFF DATE 03-14
CHECKED BY TERI JOHNSON DATE 03-14

CORRECT Dwayne G. Siegel
ENGINEER OF STRUCTURES

U-66-5

SP1099F.DGN

CONST. NO. 58100-3165-94

PROJECT NO.	YEAR	SHEET NO.
BR-I-24-2(142)	2014	

REVISIONS

NO.	DATE	BY	BRIEF DESCRIPTION

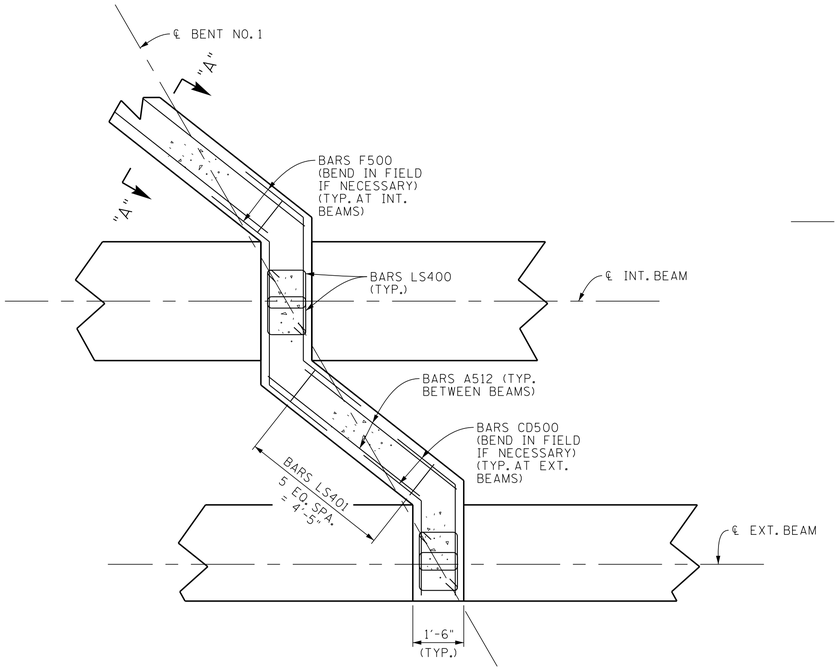

PART PLAN OF DIAPHRAGM

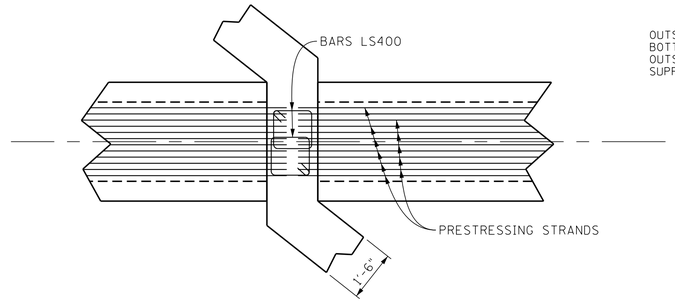

SECTION "R1-R1"

NOTE: THE SUPPORT DIAPHRAGMS AT THE BENTS SHALL BE FORMED AND THE BOTTOM 15 INCHES POURED AS SOON AS POSSIBLE AFTER THE BEAMS HAVE BEEN SET. THE REMAINDER OF THE DIAPHRAGM SHALL BE POURED CONCURRENTLY WITH THE DECK SLAB. ALL DIAPHRAGMS CONCRETE SHALL BE INCLUDED IN THE QUANTITY FOR ITEM 604-03.09.

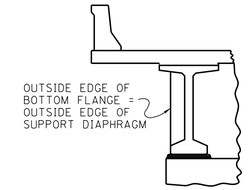

SECTION S-S

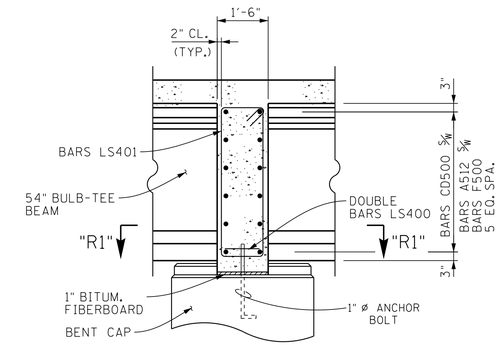

SECTION "A"-"A"

SPECIAL NOTE FOR ANCHOR BOLTS AT BENTS:
ANCHOR BOLT ASSEMBLES AT BENT SHALL BE IN ACCORDANCE WITH STANDARD DRAWING STD-6-1.

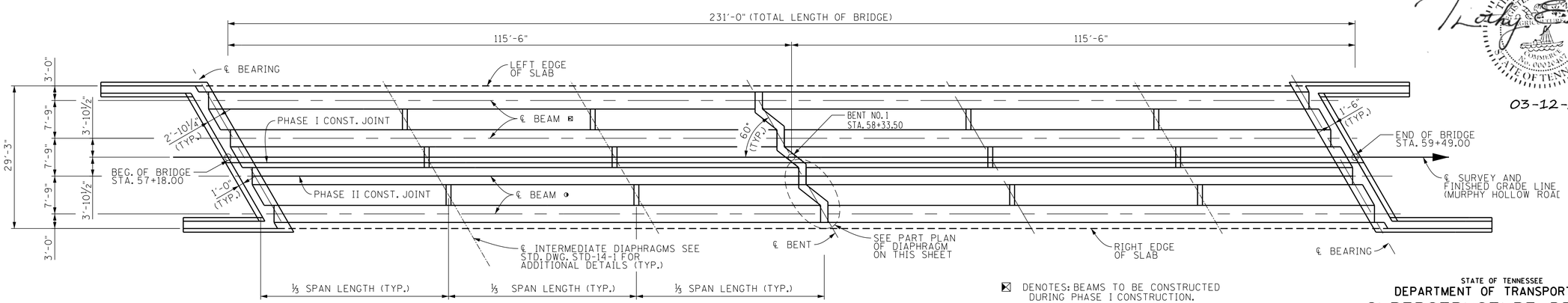

FRAMING PLAN

⊠ DENOTES: BEAMS TO BE CONSTRUCTED DURING PHASE I CONSTRUCTION.

◑ DENOTES: BEAMS TO BE CONSTRUCTED DURING PHASE II CONSTRUCTION.

TIMOTHY E. HUFF REGISTERED ENGINEER No. 00102 COMMERCE STATE OF TENNESSEE

03-12-2014

STATE OF TENNESSEE
DEPARTMENT OF TRANSPORTATION

SUPERSTRUCTURE DETAILS
MURPHY HOLLOW ROAD
OVER INTERSTATE 24
STATION 58+33.50
MARION COUNTY
2014

DESIGNED BY TERI JOHNSON DATE 03-14
DRAWN BY KEVIN MARTINKO DATE 03-14
SUPERVISED BY FIELDS/HUFF DATE 03-14
CHECKED BY TERI JOHNSON DATE 03-14

CORRECT Wayne G. Sieger
ENGINEER OF STRUCTURES

U-66-6

SP1099F.DGN

CONST. NO. 58100-3165-94

PROJECT NO.	YEAR	SHEET NO.
BR-I-24-2(142)	2014	

REVISIONS

NO.	DATE	BY	BRIEF DESCRIPTION
1	6-12-14	TJ	REVISED NOTE

PLANS NOTE: THE SLAB SHALL NOT BE POURED UNTIL ALL STRUCTURAL STEEL IS ERECTED AND ALL WELDING OR BOLTING IS COMPLETE. THE CONTRACTOR SHALL MAKE ADEQUATE PROVISIONS DURING PLACEMENT OF SLAB TO PREVENT THE EXTERIOR BEAM FROM TWISTING. NO PORTION OF THE CURB OR PARAPET SHALL BE POURED UNTIL THE ENTIRE SLAB IS IN PLACE, UNLESS REQUIRED BY STAGE CONSTRUCTION.

DECK CONCRETE POURING SEQUENCE: SLAB CONSTRUCTION JOINTS MAY BE LOCATED AT THE CONTRACTOR'S OPTION SUBJECT TO THE FOLLOWING:

1) NO CONSTRCTION JOINT MAY BE LOCATED CLOSER THAN 10 FEET OR FURTHER THAN 15 FEET FROM AN INTERIOR SUPPORT.

2) THE SLAB IN THE MIDDLE SECTION OF BOTH ADJACENT SPANS MUST BE POURED TO WITHIN AT LEAST 15 FEET OF THE SUPPORTS EITHER

3) ALL SLAB CONSTRUCTION JOINTS SHALL BE IN ACCORDANCE WITH THE SLAB CONSTRUCTION JOINT DETAIL SHOWN TO THE RIGHT.

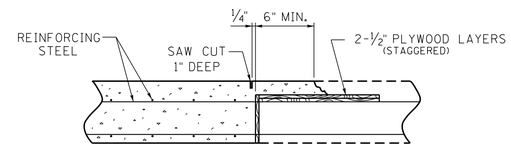

SLAB CONSTRUCTION JOINT DETAIL

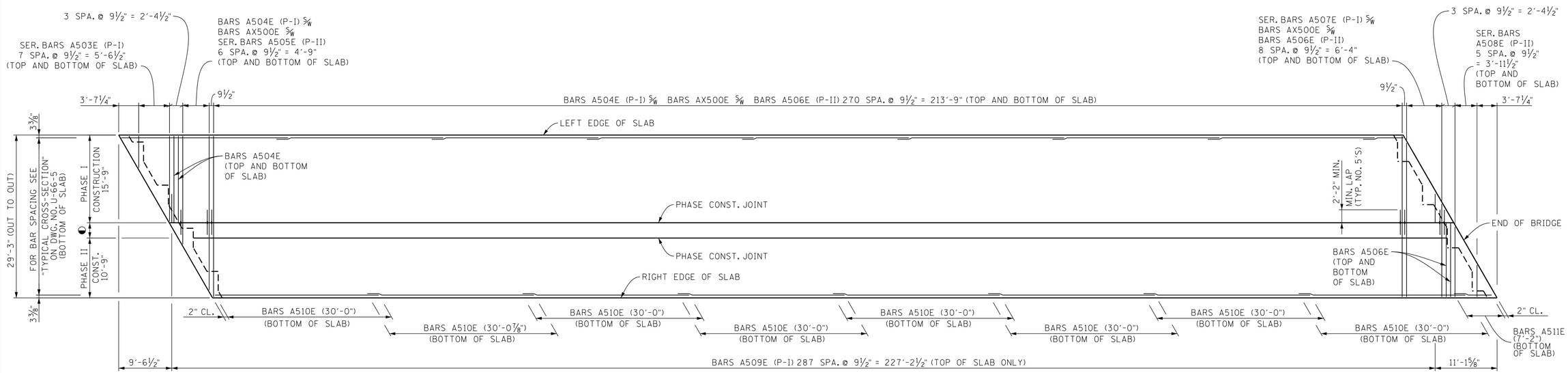

SLAB PLAN

P-I DENOTES: PHASE I CONSTRUCTION
P-II DENOTES: PHASE II CONSTRUCTION
◐ DENOTES: PHASE III CONSTRUCTION 2'-9"

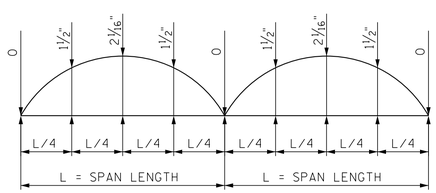

DEAD LOAD CORRECTION CURVE

THIS CURVE IS FOR DEAD LOAD SLAB AND ALL DEAD LOADS THAT ARE APPLIED AFTER THE SLAB IS IN PLACE AND SHOULD BE CORRECTED TO COMPENSATE FOR THE EFFECTS DUE TO VERTICAL CURVE.

⚠ PRESTRESSED DECK PANELS SHALL NOT BE USED.

06-12-2014

STATE OF TENNESSEE
DEPARTMENT OF TRANSPORTATION
SUPERSTRUCTURE DETAILS
MURPHY HOLLOW ROAD
OVER INTERSTATE 24
STATION 58+33.50
MARION COUNTY
2014

DESIGNED BY TERI JOHNSON DATE 03-14
DRAWN BY KEVIN MARTINKO DATE 03-14
SUPERVISED BY TERI FIELDS/HUFF DATE 03-14
CHECKED BY TERI JOHNSON DATE 03-14

CORRECT Wayne G. Sieger
ENGINEER OF STRUCTURES

U-66-7

SP1099F.DGN

CONST. NO. 58100-3165-94

PROJECT NO.	YEAR	SHEET NO.
BR-I-24-2(142)	2014	

REVISIONS

NO.	DATE	BY	BRIEF DESCRIPTION

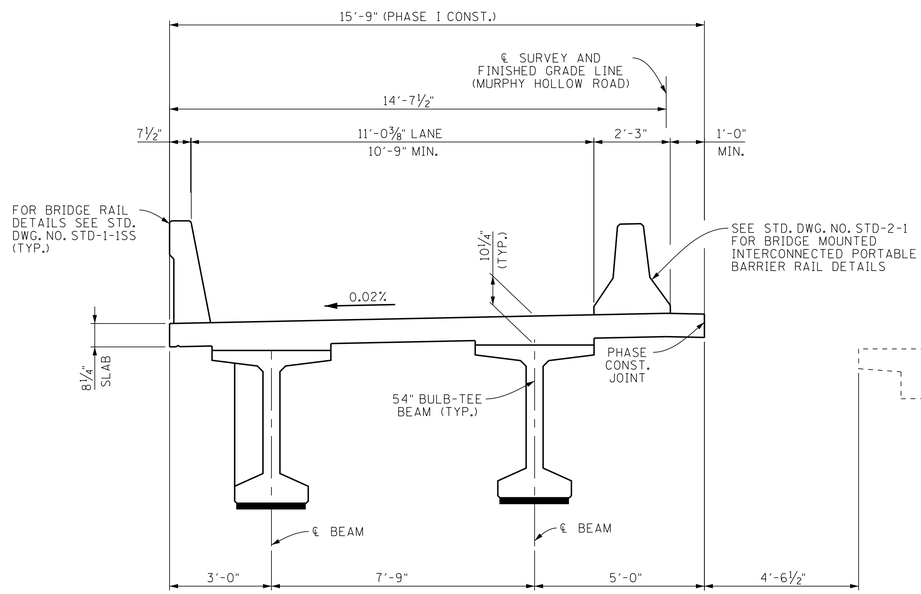

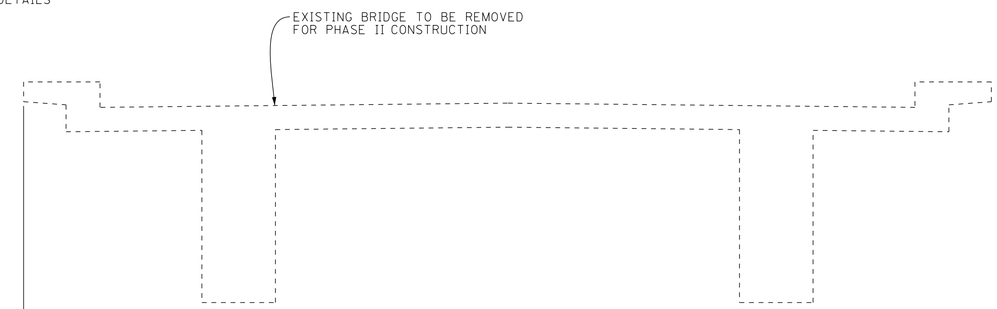

PHASE I CONSTRUCTION DETAILS

(LOOKING FORWARD ON SURVEY)

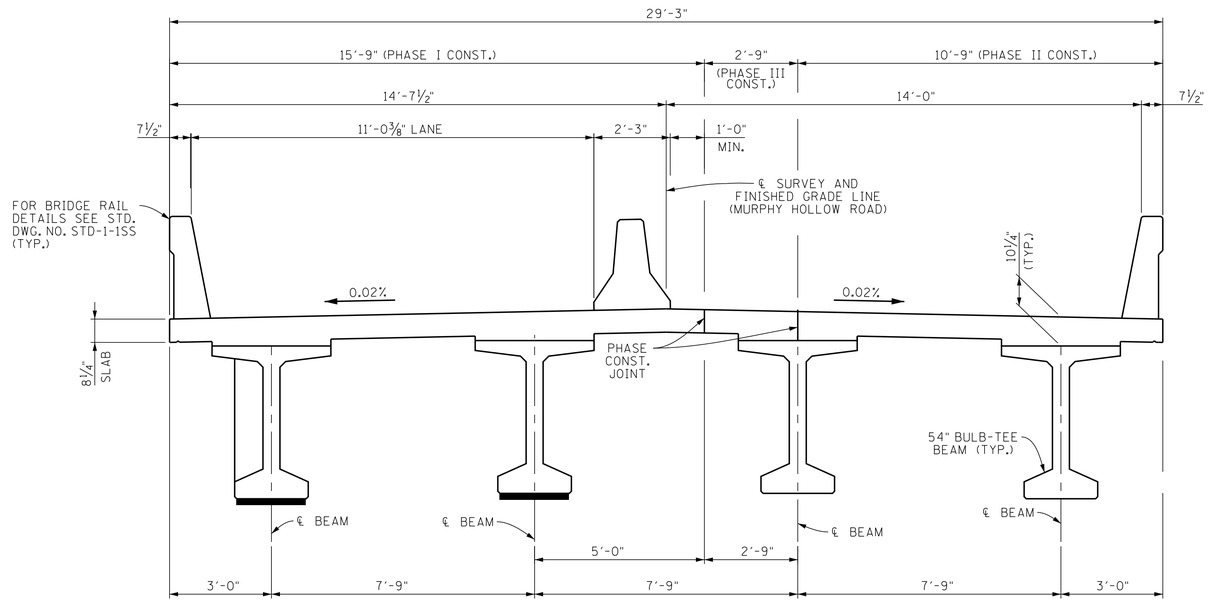

PHASE II CONSTRUCTION DETAILS

(LOOKING FORWARD ON SURVEY)

03-12-2014

STATE OF TENNESSEE
DEPARTMENT OF TRANSPORTATION

SUPERSTRUCTURE DETAILS
MURPHY HOLLOW ROAD
OVER INTERSTATE 24
STATION 58+33.50
MARION COUNTY
2014

DESIGNED BY	TERI JOHNSON	DATE	03-14
DRAWN BY	KEVIN MARTINKO	DATE	03-14
SUPERVISED BY	FIELDS/HUFF	DATE	03-14
CHECKED BY	TERI JOHNSON	DATE	03-14

CORRECT Wayne G. Sepe
ENGINEER OF STRUCTURES

U-66-8

TE1099F.DGN

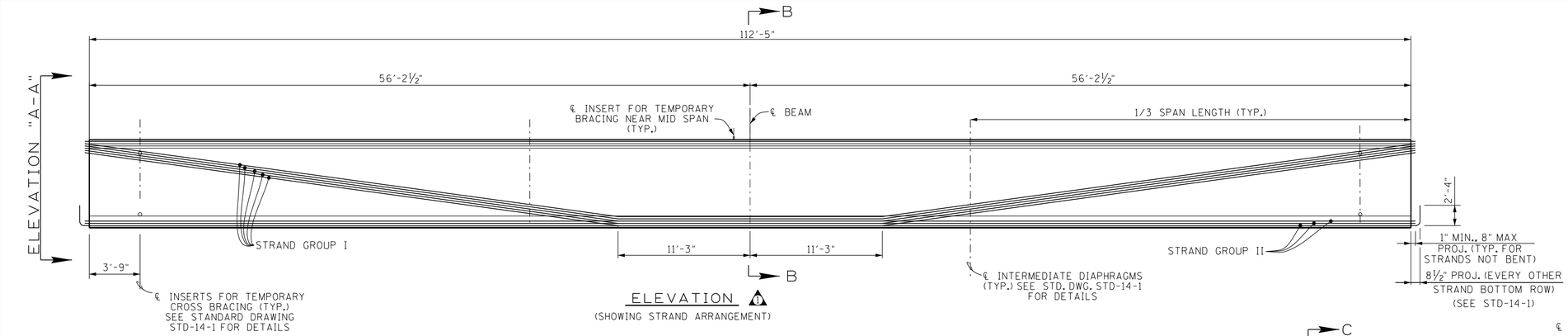

ELEVATION 1
(SHOWING STRAND ARRANGEMENT)

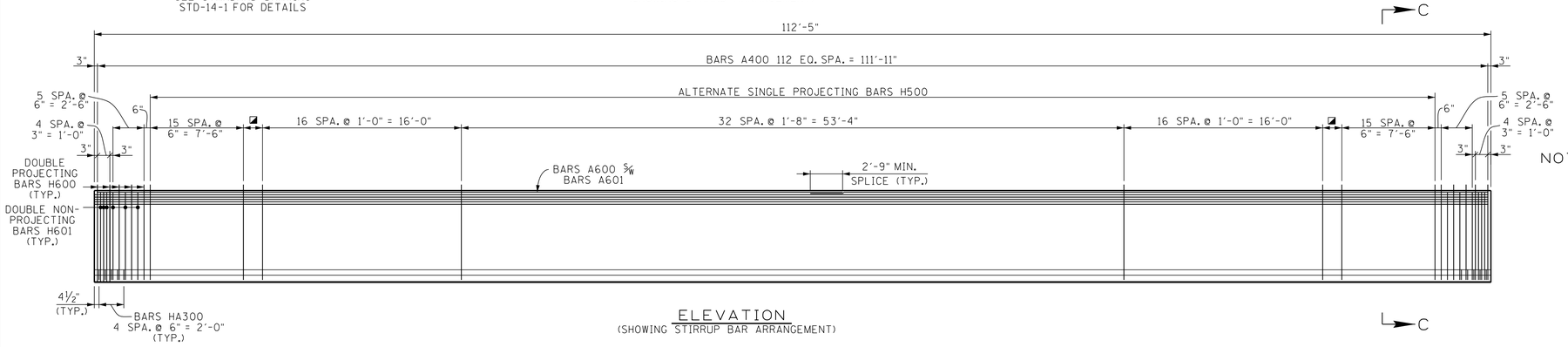

ELEVATION
(SHOWING STIRRUP BAR ARRANGEMENT)

◪ DENOTES: 2 SPA. @ 9¼" = 1'-6½"

CONST. NO. 58100-3165-94

PROJECT NO.	YEAR	SHEET NO.
BR-I-24-2(142)	2014	

REVISIONS

NO.	DATE	BY	BRIEF DESCRIPTION
1	5-30-14	TCJ	STRAND HOLD-DOWN POINT LOCATION

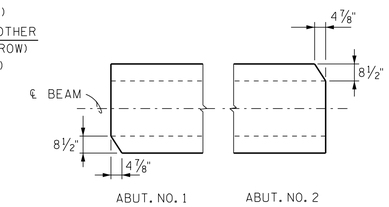

TOP VIEW OF BEAM
(TYPICAL ALL BEAMS)

NOTES:

NOTES:

SEE STD-14-1 FOR BULB-TEE BEAM STANDARD DETAILS AND NOTES.

ALL BEAMS ARE BT-54

THE CONCRETE FOR THIS CONSTRUCTION SHALL BE OF SUCH PROPERTIES AS TO ATTAIN A COMPRESSIVE STRENGTH OF NOT LESS THAN 9,000 PSI AT THE AGE OF 28 DAYS AND STRESS TRANSFER SHALL NOT BE MADE TO THE BRIDGE MEMBER UNTIL THE TEST SPECIMENS INDICATE THAT THE CONCRETE HAS REACHED A COMPRESSIVE STRENGTH OF AT LEAST 8,000 PSI. SEE GENERAL NOTES FOR CONCRETE FINISHING NOTE.

BILL OF STEEL
(PER BEAM)

BAR	SIZE	NO. REQ'D	LENGTH
A400	4	113	3'-2"
A500	5	6	5'-6"
A600	6	6	60'-0"
A601	6	6	54'-10"
H500	5	99	6'-1"
H600	6	20	6'-1"
H601	6	24	5'-7"
HA300	3	10	4'-7"

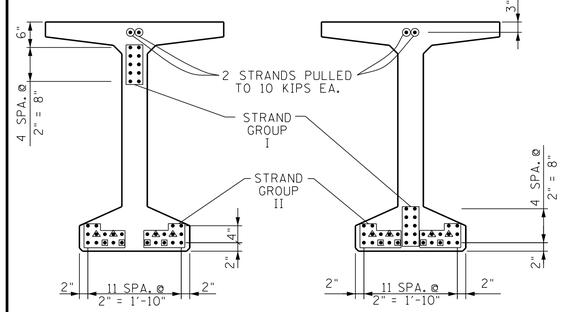

ELEVATION "A-A"
(SHOWING STRAND PATTERN)

SECTION "B-B"
(SHOWING STRAND PATTERN)

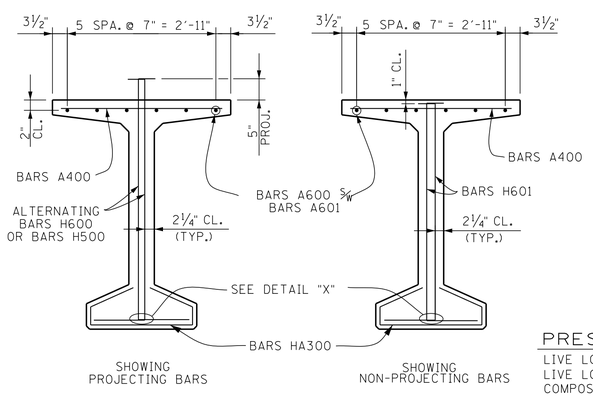

SECTION "C-C"

◪ DENOTES: BREAK BOND 4'-0" FROM END OF BEAM

◬ DENOTES: BREAK BOND 2'-0" FROM END OF BEAM

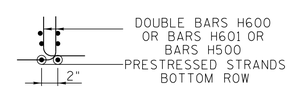

DETAIL "X"

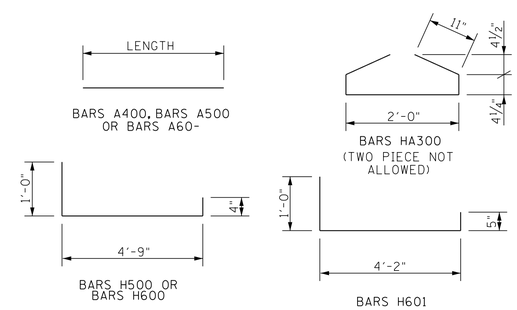

ESTIMATED QUANTITIES - PER BEAM

NO. BEAMS REQ'D	PRESTRESSING STRANDS (LOW RELAXATION) LB.	CLASS "A" CONCRETE C.Y.	REINFORCING STEEL LB.
8	3,037	19.1	2,338

PRESTRESSED BEAM DESIGN DATA - PER BEAM

LIVE LOAD DISTRIBUTION FACTOR (MOMENT): 0.730 LANES PER BEAM
LIVE LOAD DISTRIBUTION FACTOR (SHEAR): 0.873 LANES PER BEAM
COMPOSITE DEAD LOAD: DC = 187 LB/FT-PER BEAM
DW = 235 LB/FT PER BEAM
COMPOSITE SLAB DESIGN STRENGTH: f'c = 3000 PSI
NOTE: DOWNWARD DEFLECTION UNDER TOTAL DL IS NOT ALLOWED.
ALL STRANDS SHALL BE 6/10" DIA. ASTM GRADE 270 KSI
7 WIRE UNCOATED LOW RELAXATION PRESTRESSING STRANDS
INITIAL PULL 44,000 LBS / STRAND
AS = 0.217 SQ. INCHES
NOTE: THE PRESTRESSED BEAMS SHALL ATTAIN AN AGE OF AT LEAST 90 DAYS PRIOR TO POURING THE SUPPORT DIAPHRAGMS (EXCLUDING BOTTOM 15 INCHES) AND DECK SLAB.

STATE OF TENNESSEE
DEPARTMENT OF TRANSPORTATION

PRESTRESSED BEAM DETAILS
MURPHY HOLLOW ROAD
OVER
INTERSTATE 24
STATION 58+33.50
MARION COUNTY
2014

TIMOTHY E. HUFF
REGISTERED ENGINEER
AGRICULTURE
NO. 00020401
STATE OF TENNESSEE

06-11-2014

CORRECT
ENGINEER OF STRUCTURES

DESIGNED BY	T. JOHNSON	DATE	05-13
DRAWN BY	D. EASTERLY	DATE	02-14
SUPERVISED BY	J.W.F./T.E.H.	DATE	02-14
CHECKED BY	TERI JOHNSON	DATE	03-14

U-66-9

AB1099F.DGN

NOTE: WHEN POURING WINGWALLS, PROVISIONS SHALL BE MADE FOR SETTING REINFORCING STEEL FOR WINGPOSTS AND PARAPETS. FOR DETAILS OF WINGPOSTS AND PARAPET, SEE STD. DWG. NO. STD-1-1SS.

NOTE: NOT LESS THAN HALF OF THE SLAB IN THE END SPAN SHALL BE POURED PRIOR TO, OR CONCURRENTLY WITH, PLACEMENT OF ANY PART OF THE ABUTMENT BACKWALL. AT LEAST THE TOP 12 INCHES OF THE BACKWALL SHALL BE POURED CONCURRENTLY WITH THE END OF SLAB.

NOTE: RISER BLOCKS SHALL BE POURED MONOLITHICALLY WITH THE ABUTMENT BEAM.

NOTE: ELASTOMERIC PADS SHALL BE IN PLACE A MINIMUM OF ONE DAY BEFORE BEING DISTURBED BY SETTING BEAMS CEMENT IN SUCH A WAY THAT VISIBLE CONCRETE SURFACES WILL NOT BE STAINED.

CONST. NO. 58100-3165-94		
PROJECT NO.	YEAR	SHEET NO.
BR-I-24-2(142)	2014	

REVISIONS

NO.	DATE	BY	BRIEF DESCRIPTION

NOTE: COST OF BRIDGE RAIL AND POST IS TO BE INCLUDED IN THE UNIT PRICE BID FOR THE BRIDGE RAIL SYSTEM.

NOTE: WINGBEAM PILES SHALL BE DRIVEN TO THE PLANS TIP ELEVATION OR REFUSAL. SEISMIC ATTACHMENT IS NOT REQUIRED FOR WINGBEAM PILES.

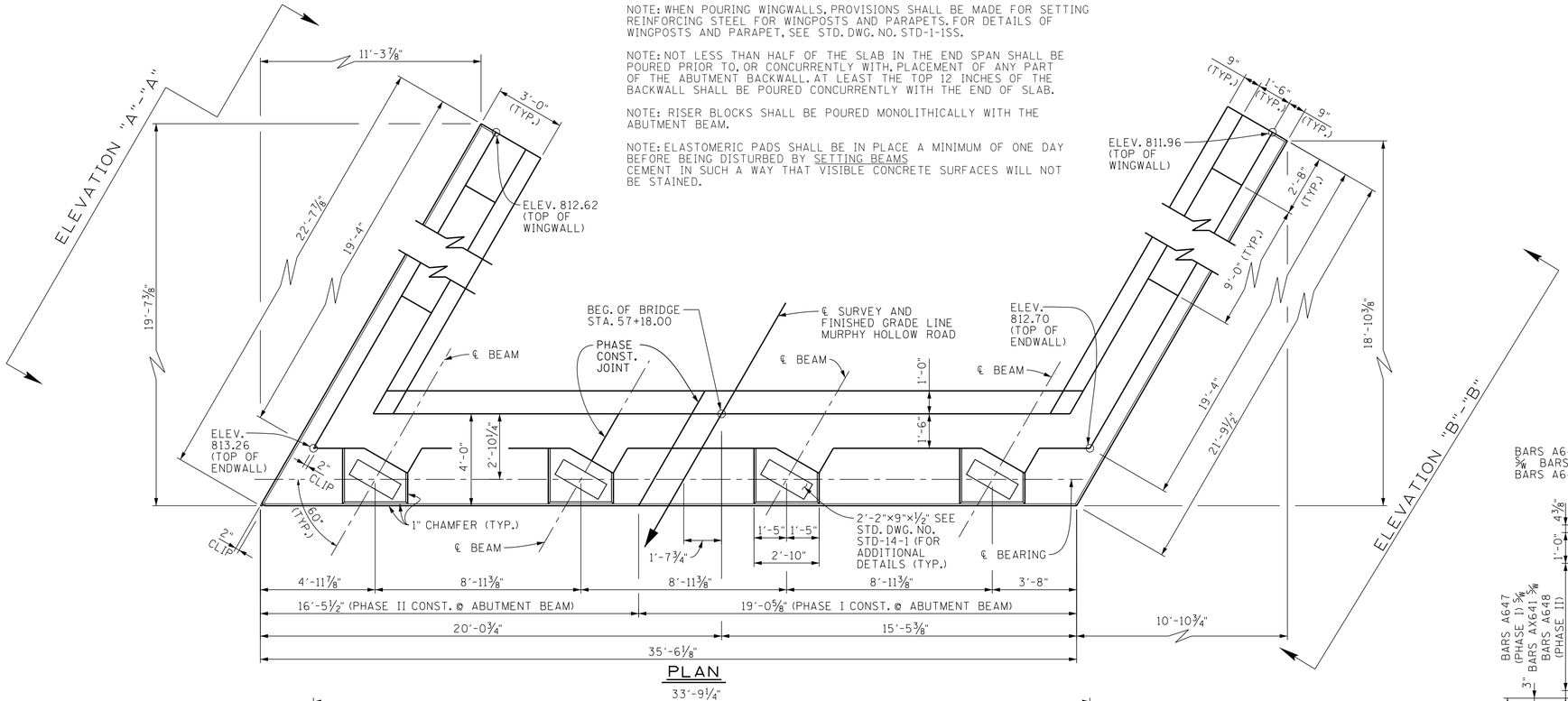

PLAN

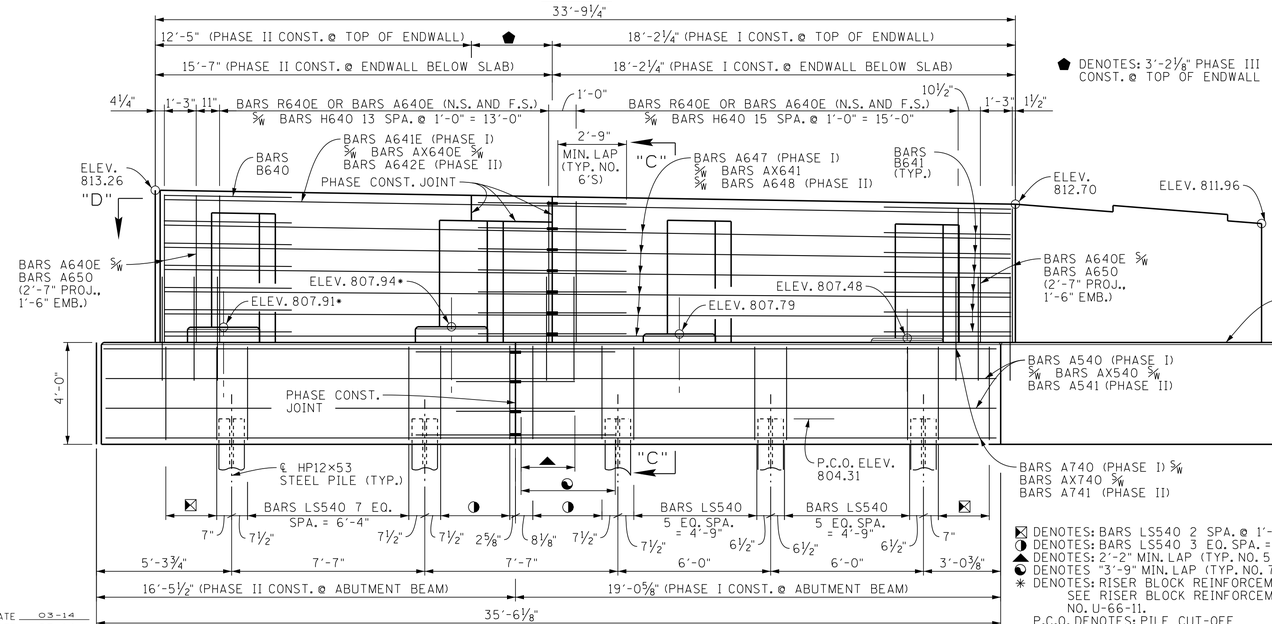

ELEVATION
(LOOKING BACK ON SURVEY)

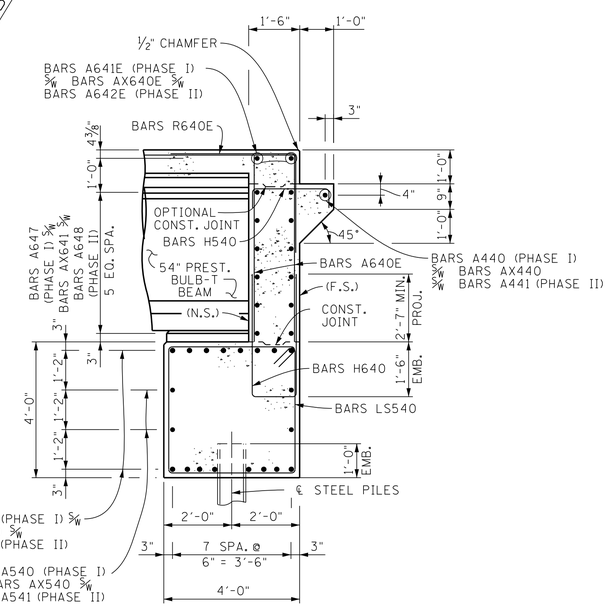

SECTION "C"-"C"

ESTIMATED QUANTITIES

ITEMS	CLASS "A" CONCRETE (BRIDGES) C.Y.	STEEL BAR REINFORCEMENT (BRIDGES) LB.	EPOXY COATED REINFORCING STEEL (BRIDGES) LB.
ABUTMENT NO. 1	63	6997	1377

TIMOTHY E. HUFF REGISTERED ENGINEER TENNESSEE LICENSE NO. 112 STATE OF TENNESSEE

03-12-2014

STATE OF TENNESSEE
DEPARTMENT OF TRANSPORTATION
ABUTMENT NO. 1
MURPHY HOLLOW ROAD
OVER INTERSTATE 24
STATION 58+33.50
MARION COUNTY
2014

⊠ DENOTES: BARS LS540 2 SPA. @ 1'-0" = 2'-0"
◑ DENOTES: BARS LS540 3 EQ. SPA. = 2'-8⅝"
▲ DENOTES: 2'-2" MIN. LAP (TYP. NO. 5'S)
◐ DENOTES: 3'-9" MIN. LAP (TYP. NO. 7'S)
✳ DENOTES: RISER BLOCK REINFORCEMENT REQUIRED SEE RISER BLOCK REINFORCEMENT DETAIL ON DWG. NO. U-66-11.
P.C.O. DENOTES: PILE CUT-OFF
N.S. DENOTES: NEAR SIDE
F.S. DENOTES: FAR SIDE

CORRECT Wayne G. Sogo
ENGINEER OF STRUCTURES

DESIGNED BY TERI JOHNSON	DATE 03-14		
DRAWN BY KEVIN MARTINKO	DATE 03-14		
SUPERVISED BY FIELDS/HUFF	DATE 03-14		
CHECKED BY TERI JOHNSON	DATE 03-14		

U-66-10

AB1099F.DGN

CONST. NO. 58100-3165-94

PROJECT NO.	YEAR	SHEET NO.
BR-I-24-2(142)	2014	

REVISIONS

NO.	DATE	BY	BRIEF DESCRIPTION

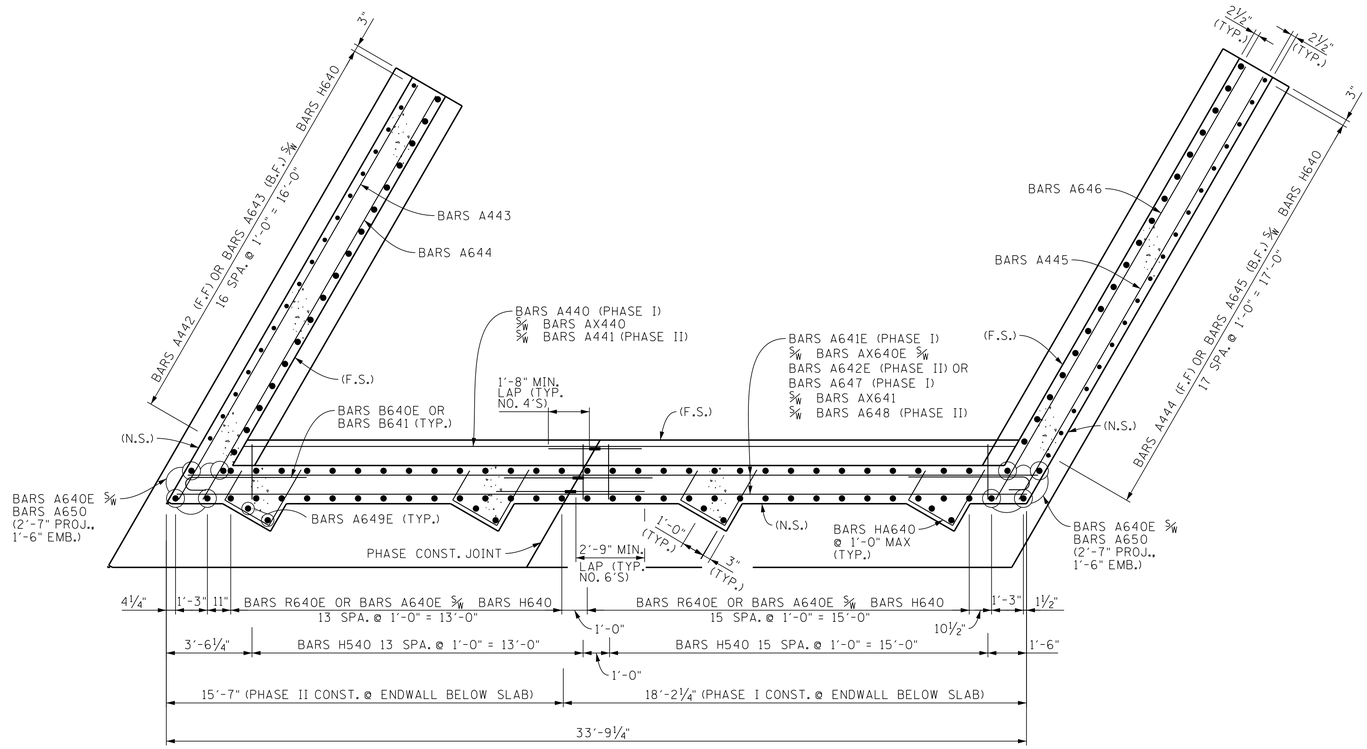

SECTION "D"-"D"

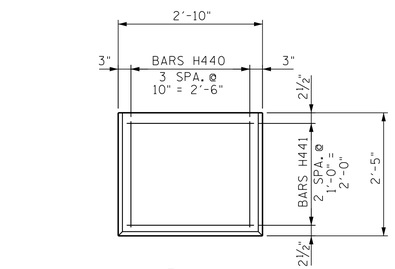

PLAN

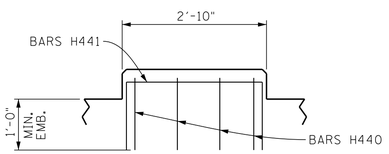

ELEVATION

RISER BLOCK REINFORCING DETAILS

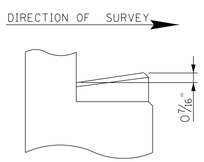

RISER BLOCK SLOPE DETAILS

TIMOTHY E. HUFF
REGISTERED ENGINEER
AGRICULTURE
COMMERCE
NO. 00032487
STATE OF TENNESSEE

03-12-2014

STATE OF TENNESSEE
DEPARTMENT OF TRANSPORTATION
ABUTMENT NO. 1 DETAILS
MURPHY HOLLOW ROAD
OVER INTERSTATE 24
STATION 58+33.50
MARION COUNTY
2014

CORRECT Wayne G. Seger
ENGINEER OF STRUCTURES

DESIGNED BY TERI JOHNSON	DATE 03-14		
DRAWN BY KEVIN MARTINKO	DATE 03-14		
SUPERVISED BY FIELDS/HUFF	DATE 03-14		
CHECKED BY TERI JOHNSON	DATE 03-14		

U-66-11

AB1099F.DGN

CONST. NO. 58100-3165-94

PROJECT NO.	YEAR	SHEET NO.
BR-I-24-2(142)	2014	

REVISIONS

NO.	DATE	BY	BRIEF DESCRIPTION

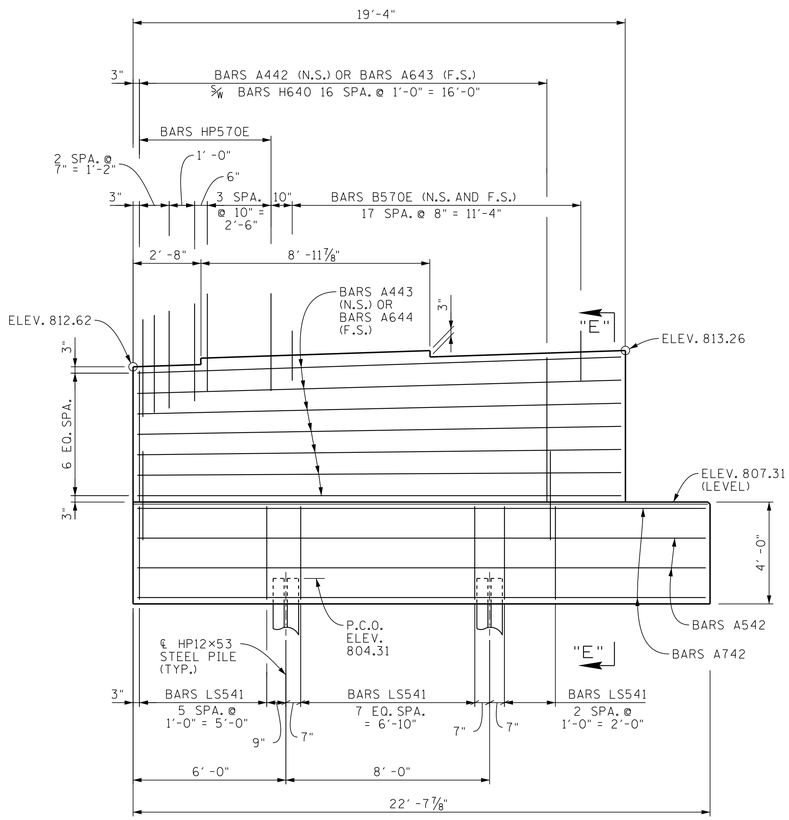

ELEVATION "A"-"A"

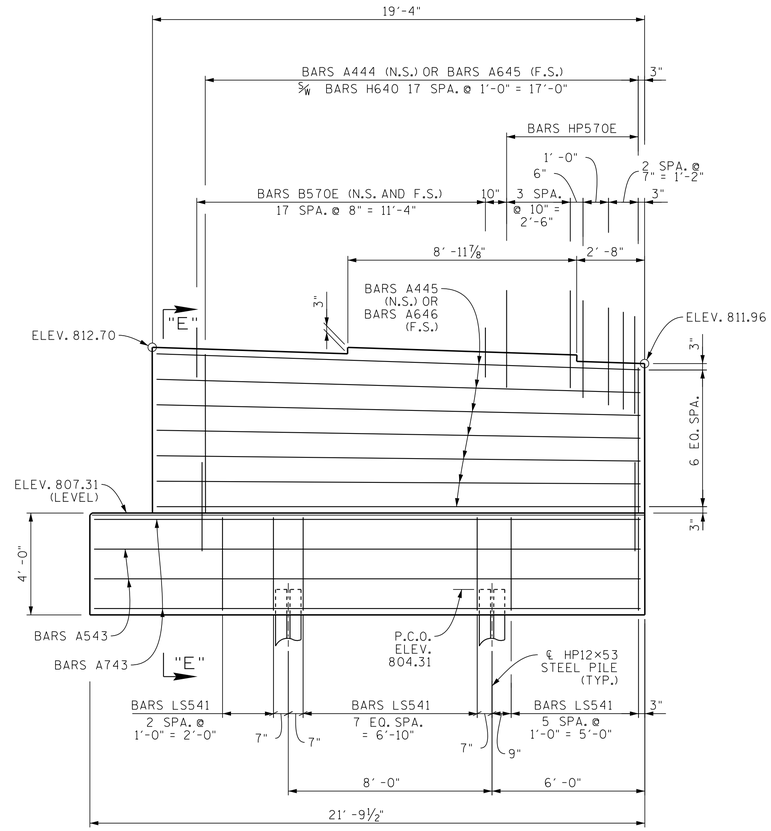

ELEVATION "B"-"B"

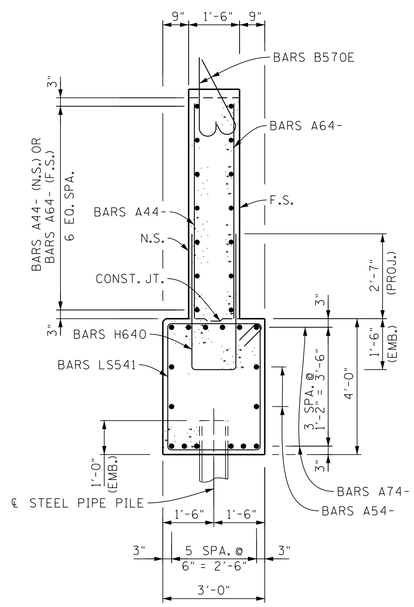

SECTION "E"-"E"

03-12-2014

STATE OF TENNESSEE
DEPARTMENT OF TRANSPORTATION
ABUTMENT NO. 1 DETAILS
MURPHY HOLLOW ROAD
OVER INTERSTATE 24
STATION 58+33.50
MARION COUNTY
2014

DESIGNED BY TERI JOHNSON DATE 03-14
DRAWN BY KEVIN MARTINKO DATE 03-14
SUPERVISED BY FIELDS/HUFF DATE 03-14
CHECKED BY TERI JOHNSON DATE 03-14

CORRECT Wayne G. Seger
ENGINEER OF STRUCTURES

U-66-12

AB1099F.DGN

NOTE: WHEN POURING WINGWALLS, PROVISIONS SHALL BE MADE FOR SETTING REINFORCING STEEL FOR WINGPOSTS AND PARAPETS. FOR DETAILS OF WINGPOSTS AND PARAPET, SEE STD. DWG. NO. STD-1-1SS.

NOTE: NOT LESS THAN HALF OF THE SLAB IN THE END SPAN SHALL BE POURED PRIOR TO, OR CONCURRENTLY WITH, PLACEMENT OF ANY PART OF THE ABUTMENT BACKWALL. AT LEAST THE TOP 12 INCHES OF THE BACKWALL SHALL BE POURED CONCURRENTLY WITH THE END OF SLAB.

NOTE: COST OF BRIDGE RAIL AND POST IS TO BE INCLUDED IN THE UNIT PRICE BID FOR THE BRIDGE RAIL SYSTEM.

NOTE: ELASTOMERIC PADS SHALL BE IN PLACE A MINIMUM OF ONE DAY BEFORE BEING DISTURBED BY SETTING BEAMS CEMENT IN SUCH A WAY THAT VISIBLE CONCRETE SURFACES WILL NOT BE STAINED.

NOTE: WINGBEAM PILES SHALL BE DRIVEN TO THE PLANS TIP ELEVATION OR REFUSAL. SEISMIC ATTACHMENT IS NOT REQUIRED FOR WINGBEAM PILES.

NOTE: RISER BLOCKS SHALL BE POURED MONOLITHICALLY WITH THE ABUTMENT BEAM.

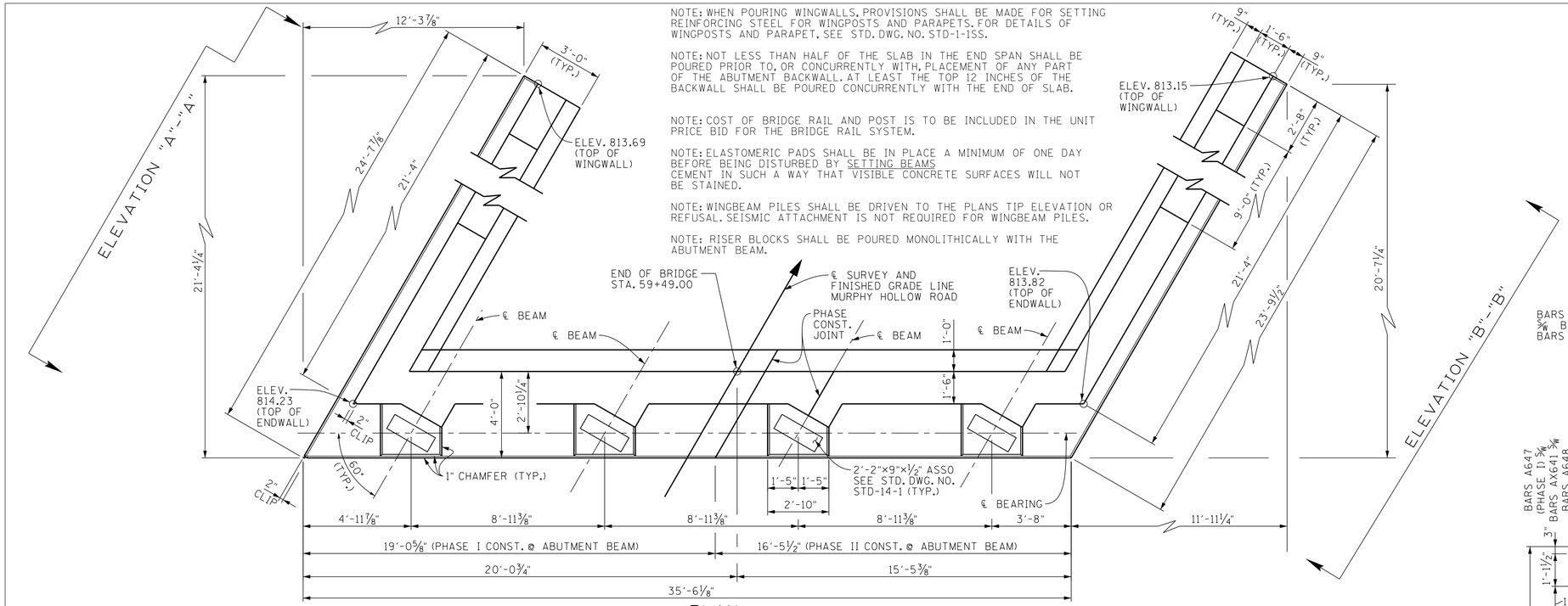

PLAN

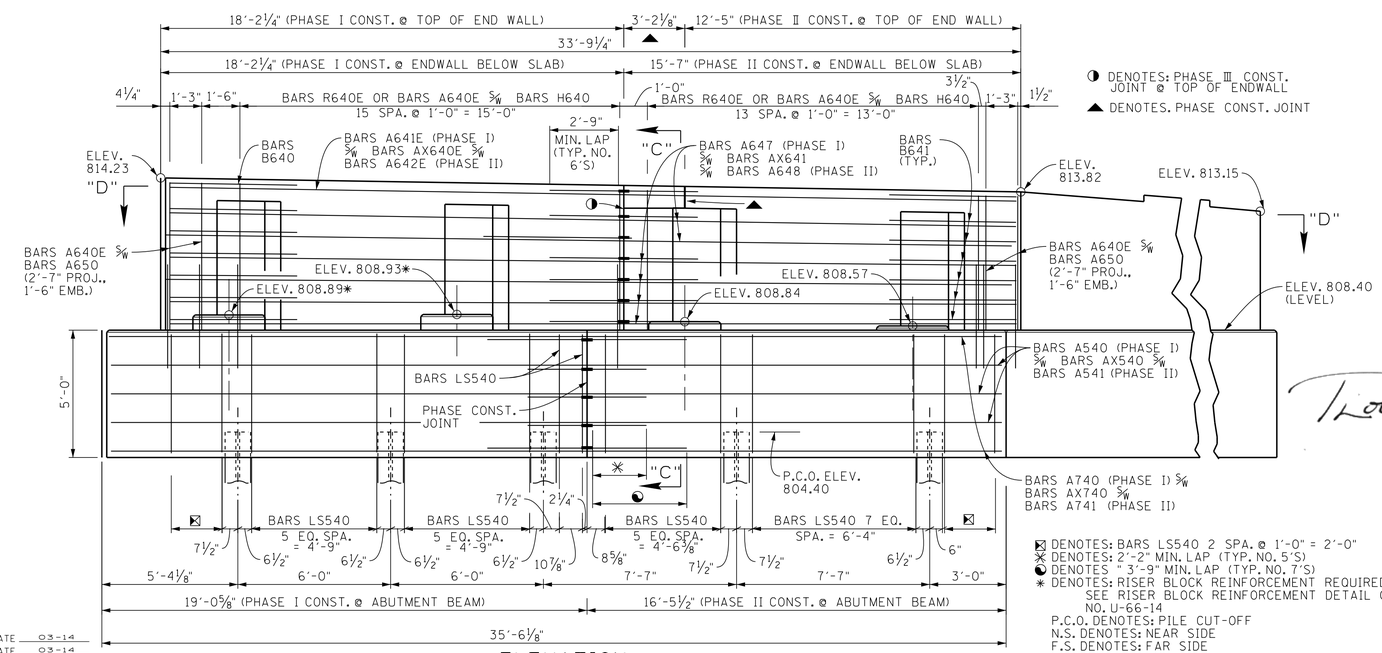

ELEVATION

(LOOKING FORWARD ON SURVEY)

◑ DENOTES: PHASE III CONST. JOINT @ TOP OF ENDWALL

▲ DENOTES. PHASE CONST. JOINT

⊠ DENOTES: BARS LS540 2 SPA. @ 1'-0" = 2'-0"
✳ DENOTES: 2'-2" MIN. LAP (TYP. NO. 5'S)
◐ DENOTES " 3'-9" MIN. LAP (TYP. NO. 7'S)
✳ DENOTES: RISER BLOCK REINFORCEMENT REQUIRED SEE RISER BLOCK REINFORCEMENT DETAIL ON DWG. NO. U-66-14
P.C.O. DENOTES: PILE CUT-OFF
N.S. DENOTES: NEAR SIDE
F.S. DENOTES: FAR SIDE

CONST. NO. 58100-3165-94

PROJECT NO.	YEAR	SHEET NO.
BR-I-24-2(142)	2014	

REVISIONS

NO.	DATE	BY	BRIEF DESCRIPTION

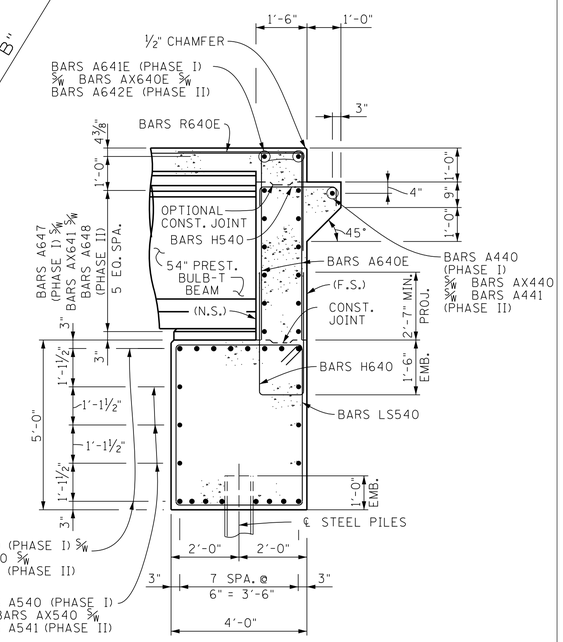

SECTION "C"-"C"

ESTIMATED QUANTITIES

ITEMS	CLASS "A" CONCRETE (BRIDGES) C.Y.	STEEL BAR REINFORCEMENT (BRIDGES) LB.	EPOXY COATED REINFORCING STEEL (BRIDGES) LB.
ABUTMENT NO. 2	76	7298	1377

03-12-2014

STATE OF TENNESSEE
DEPARTMENT OF TRANSPORTATION
ABUTMENT NO. 2
MURPHY HOLLOW ROAD
OVER INTERSTATE 24
STATION 58+33.50
MARION COUNTY
2014

DESIGNED BY TERI JOHNSON DATE 03-14
DRAWN BY KEVIN MARTINKO DATE 03-14
SUPERVISED BY FIELDS/HUFF DATE 03-14
CHECKED BY TERI JOHNSON DATE 03-14

CORRECT
ENGINEER OF STRUCTURES

U-66-13

AB1099F.DGN

CONST. NO. 58100-3165-94

PROJECT NO.	YEAR	SHEET NO.
BR-I-24-2(142)	2014	

REVISIONS

NO.	DATE	BY	BRIEF DESCRIPTION

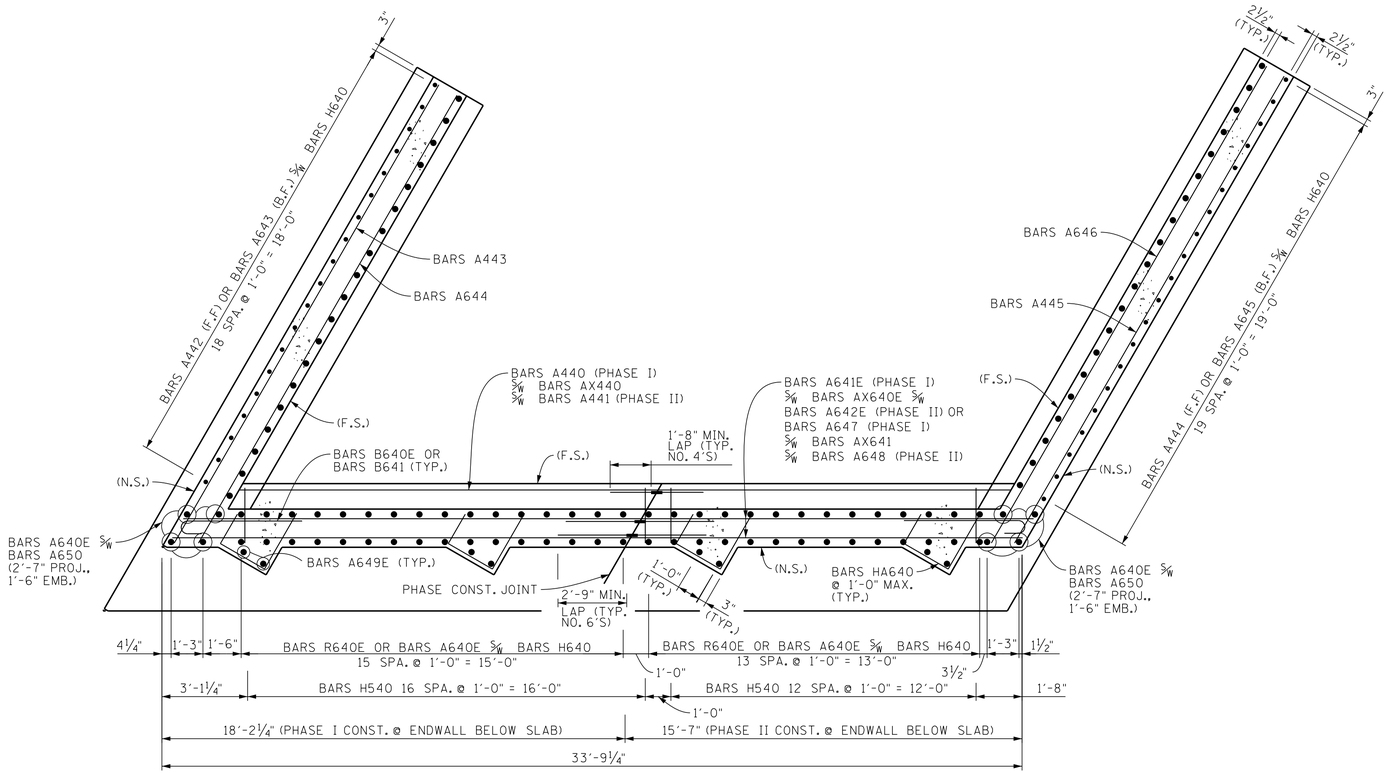

SECTION "D"-"D"

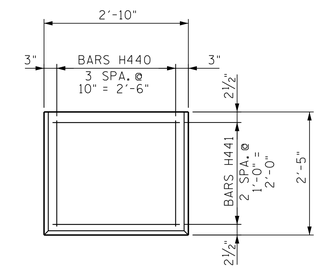

PLAN

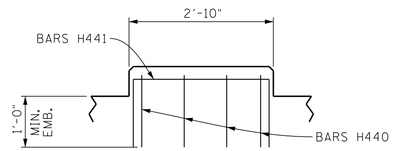

ELEVATION

RISER BLOCK REINFORCING DETAILS

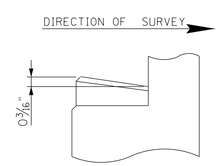

RISER BLOCK SLOPE DETAILS

TIMOTHY E. HUFF
REGISTERED ENGINEER
No. 100126
A COMMERCIAL
NON-COMMERCIAL
STATE OF TENNESSEE

03-12-2014

STATE OF TENNESSEE
DEPARTMENT OF TRANSPORTATION
ABUTMENT NO. 2 DETAILS
MURPHY HOLLOW ROAD
OVER INTERSTATE 24
STATION 58+33.50
MARION COUNTY
2014

CORRECT Wayne G. Sieg
ENGINEER OF STRUCTURES

DESIGNED BY TERI JOHNSON DATE 03-14
DRAWN BY KEVIN MARTINKO DATE 03-14
SUPERVISED BY FIELDS/HUFF DATE 03-14
CHECKED BY TERI JOHNSON DATE 03-14

U-66-14

AB1099F.DGN

CONST. NO. 58100-3165-94

PROJECT NO.	YEAR	SHEET NO.
BR-I-24-2(142)	2014	

REVISIONS

NO.	DATE	BY	BRIEF DESCRIPTION

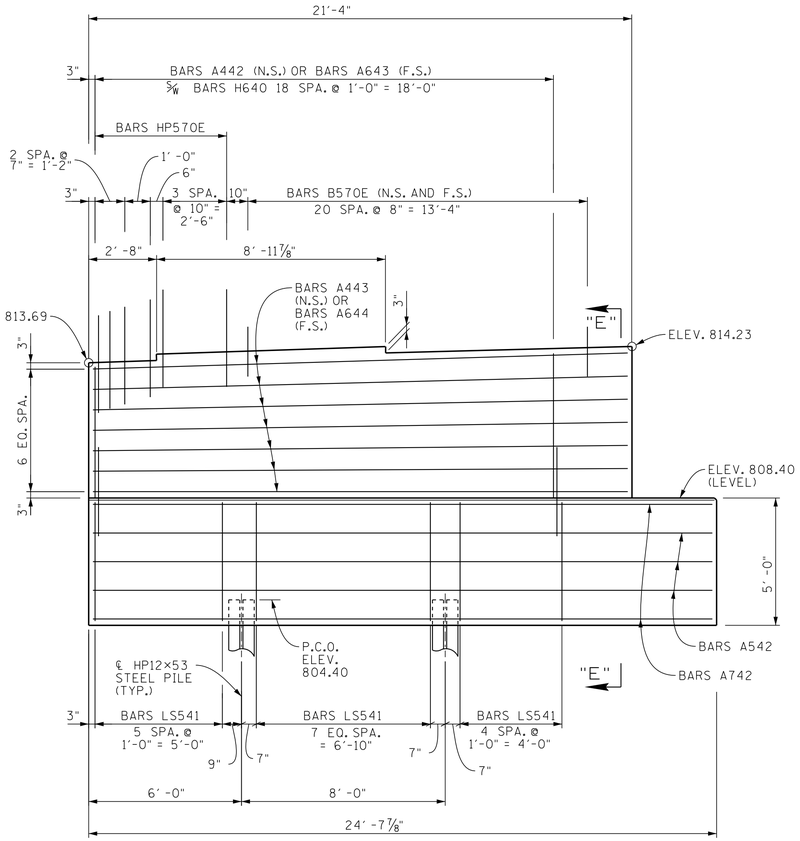

ELEVATION "A"-"A"

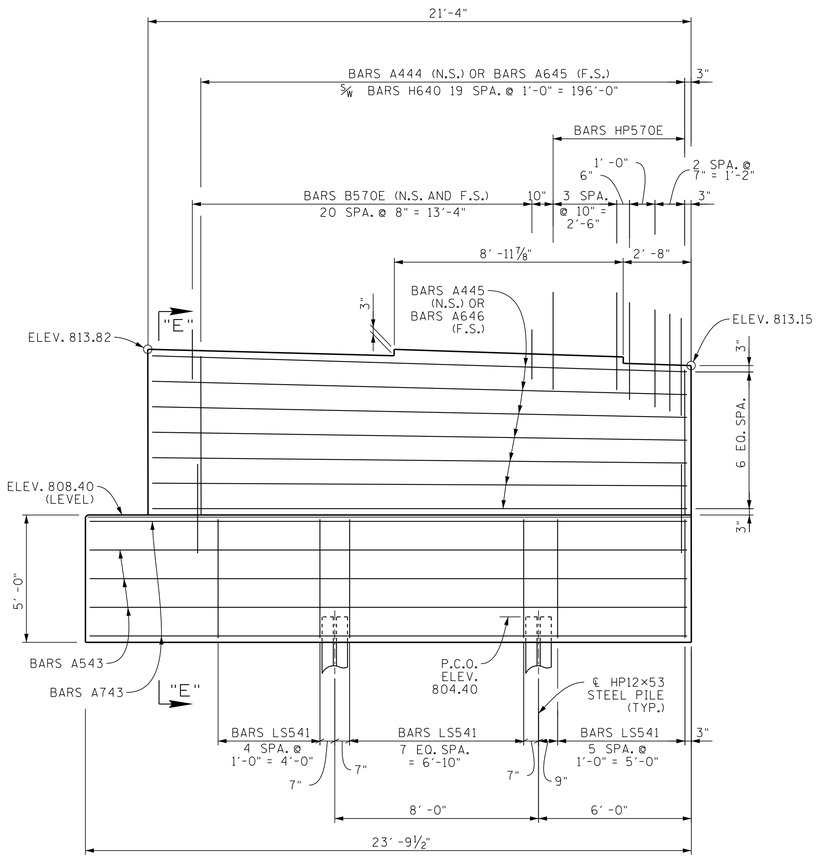

ELEVATION "B"-"B"

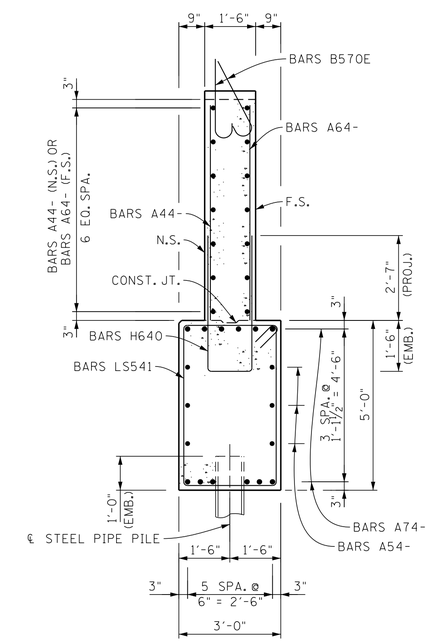

SECTION "E"-"E"

03-12-2014

STATE OF TENNESSEE
DEPARTMENT OF TRANSPORTATION
ABUTMENT NO. 2 DETAILS
MURPHY HOLLOW ROAD
OVER INTERSTATE 24
STATION 58+33.50
MARION COUNTY
2014

DESIGNED BY TERI JOHNSON DATE 03-14
DRAWN BY KEVIN MARTINKO DATE 03-14
SUPERVISED BY FIELDS/HUFF DATE 03-14
CHECKED BY TERI JOHNSON DATE 03-14

CORRECT Wayne G. Seger
ENGINEER OF STRUCTURES

U-66-15

BP1099.DGN

CONST. NO. 58100-3165-94

PROJECT NO.	YEAR	SHEET NO.
BR-1-24-2(142)	2014	

REVISIONS

NO.	DATE	BY	BRIEF DESCRIPTION
1	5-30-14	TCJ	REVISED DIMENSIONS & STEEL QUANTITIES & SCALING

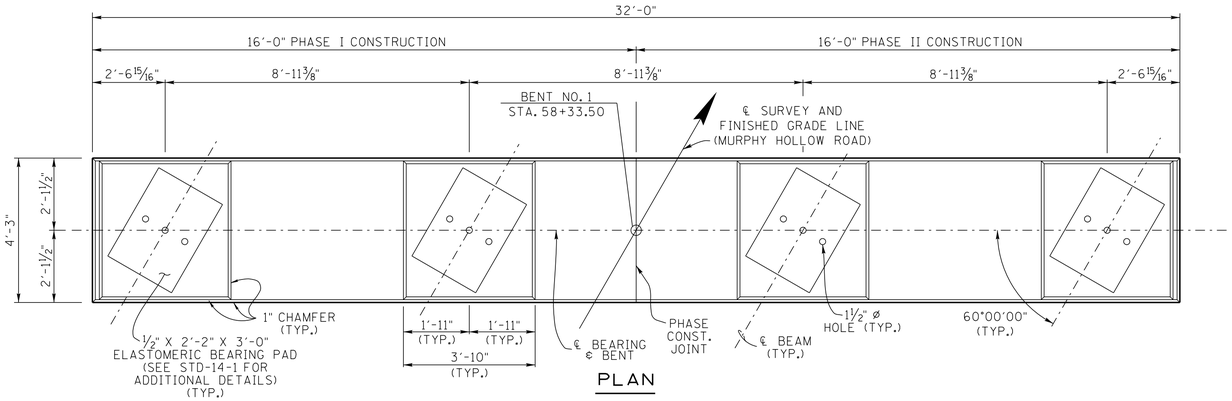

PLAN

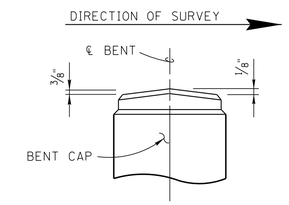

RISER BLOCK SLOPE DETAIL

NOTE: RISER BLOCK BEARING SURFACE TO CONFORM TO BOTTOM OF BEAM GRADE.

NOTE: WHEN POURING CAP BEAM, PROVISIONS SHALL BE MADE FOR SETTING ANCHOR BOLTS. BOLT PROJECTION 11".

NOTE: RISER BLOCKS TO BE POURED MONOLITHICALLY WITH CAP BEAM.

NOTE: COLUMN STEEL TO EXTEND 3'-9" INTO CAP BEAM.

NOTE: ELASTOMERIC PADS SHALL BE IN PLACE A MINIMUM OF ONE DAY BEFORE BEING DISTURBED BY SETTING BEAMS ON CONCRETE. PLACE RUBBER BONDING CEMENT IN SUCH A WAY THAT VISIBLE CONCRETE SURFACES WILL NOT BE STAINED.

NOTE: SEE STANDARD DRAWING STD-6-1 FOR PILE DETAILS AND NOTES.

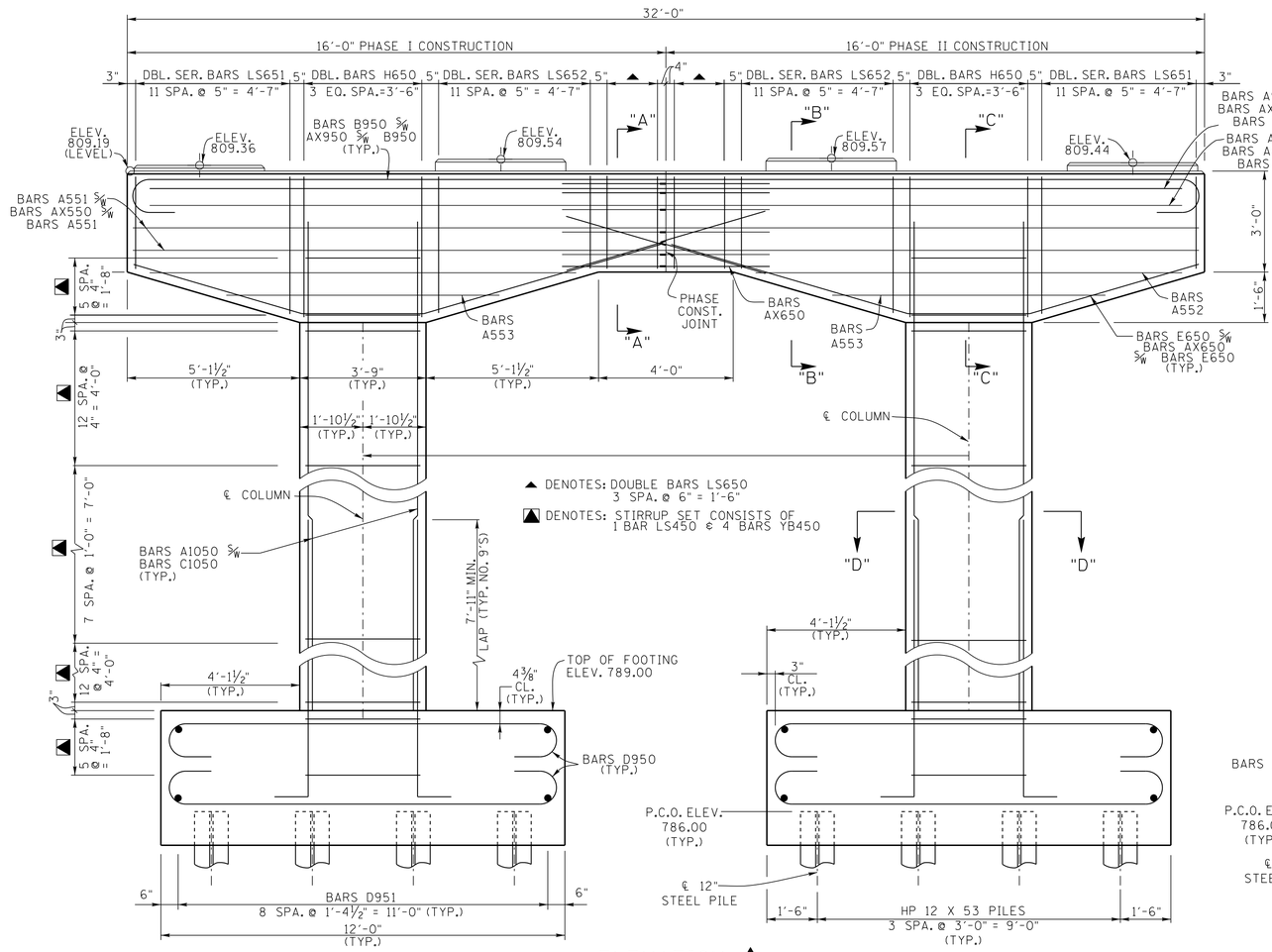

ELEVATION 1

(LOOKING FORWARD ON SURVEY)

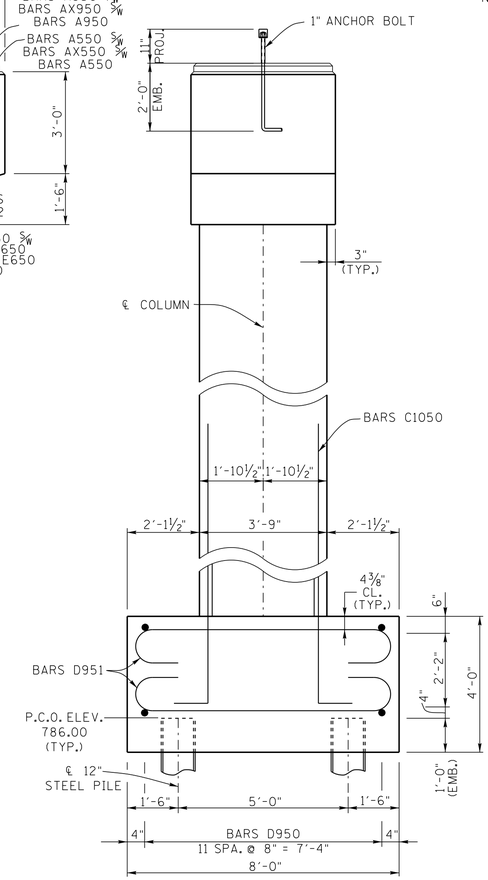

END ELEVATION 1

06-11-2014

1

ESTIMATED QUANTITIES	
CLASS "A" CONCRETE (BRIDGES) C.Y.	REINFORCING STEEL (BRIDGES) LB.
65	17,607

STATE OF TENNESSEE
DEPARTMENT OF TRANSPORTATION

BENT NO. 1
MURPHY HOLLOW ROAD
OVER INTERSTATE 24
STATION 58+33.50
MARION COUNTY
2014

CORRECT ENGINEER OF STRUCTURES

DESIGNED BY	T. JOHNSON	DATE	5-13
DRAWN BY	D. EASTERLY	DATE	2-14
SUPERVISED BY	J.W.E./T.E.H.	DATE	2-14
CHECKED BY	TERI JOHNSON	DATE	3-14

U-66-16

BP1099.DGN

CONST. NO. 58100-3165-94

PROJECT NO.	YEAR	SHEET NO.
BR-1-24-2(142)	2014	

REVISIONS

NO.	DATE	BY	BRIEF DESCRIPTION
1	5-30-14	TCJ	CHANGED BAR SIZE & STEEL SCALING

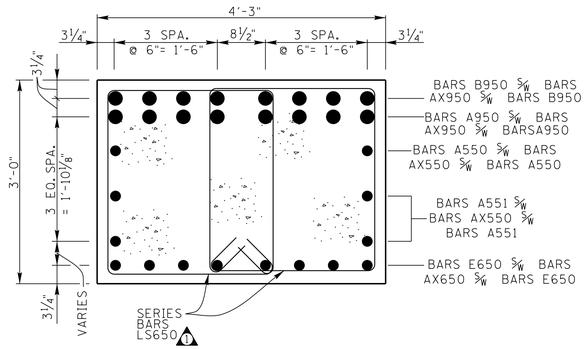

SECTION "A"-"A"

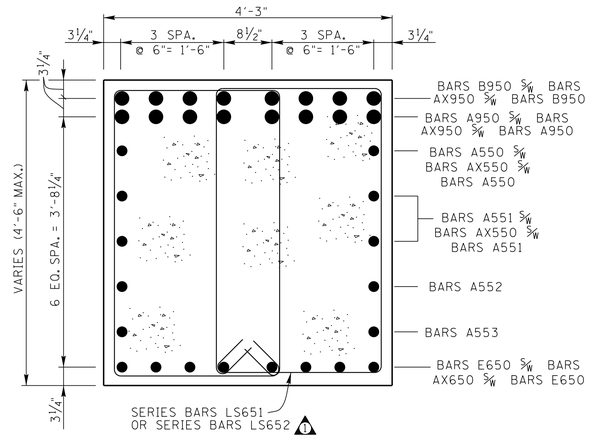

SECTION "B"-"B"

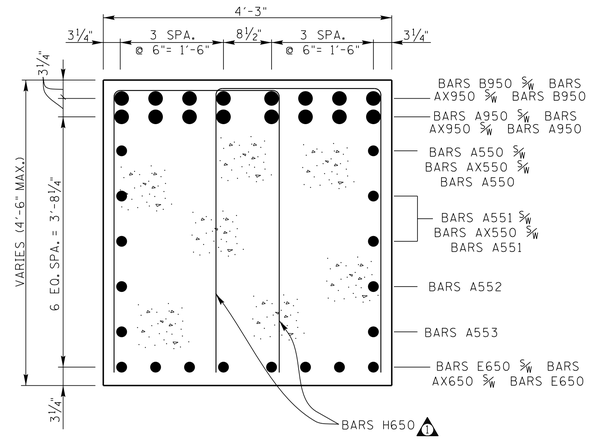

SECTION "C"-"C"

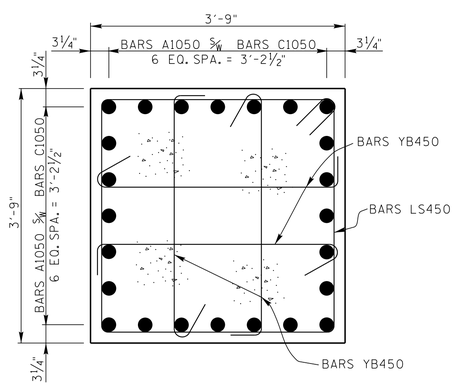

SECTION "D"-"D"

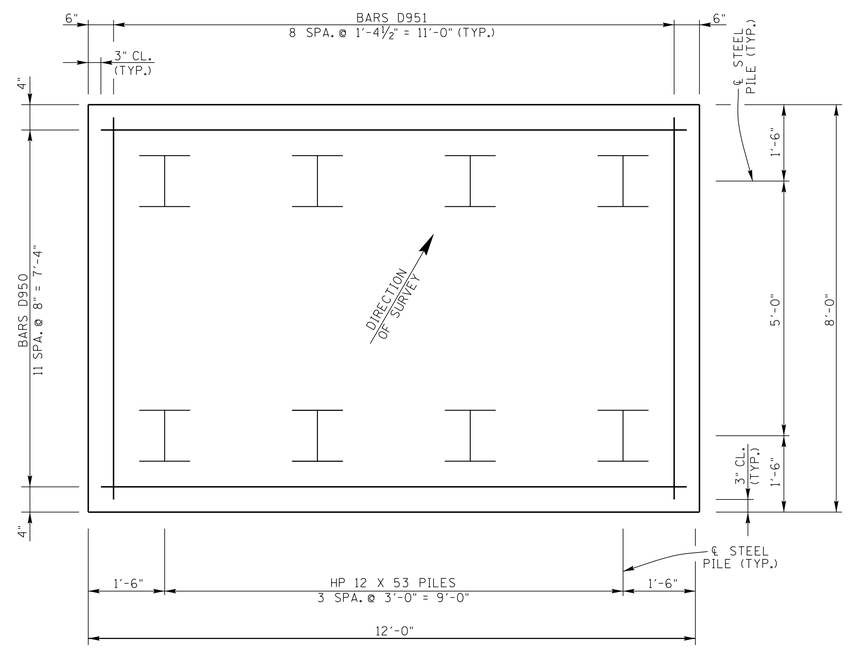

PLAN OF FOOTING 1

06-11-2014

STATE OF TENNESSEE
DEPARTMENT OF TRANSPORTATION

BENT NO. 1 DETAILS
MURPHY HOLLOW ROAD
OVER INTERSTATE 24
STATION 58+33.50
MARION COUNTY
2014

CORRECT _____ ENGINEER OF STRUCTURES

DESIGNED BY T. JOHNSON DATE 5-13
DRAWN BY D. EASTERLY DATE 2-14
SUPERVISED BY J.W.F./T.E.H. DATE 2-14
CHECKED BY J. FALCE DATE 3-14

U-66-17

FF1099F.DGN

CONST. NO. 58100-3165-94

PROJECT NO.	YEAR	SHEET NO.
BR-I-24-2(142)	2014	

REVISIONS

NO.	DATE	BY	BRIEF DESCRIPTION

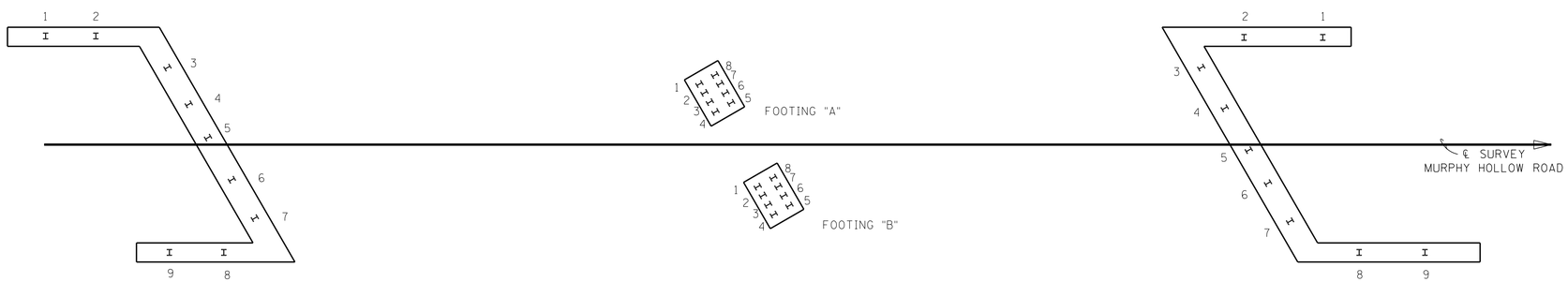

ABUTMENT NO. 1

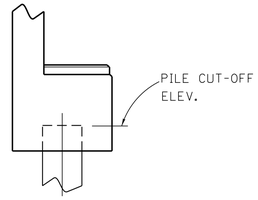

ABUTMENT NO. 1

BENT NO. 1

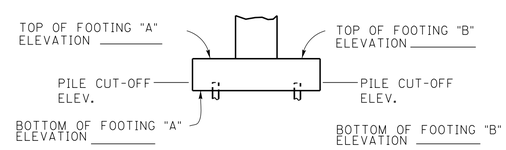

BENT NO. 1

ABUTMENT NO. 2

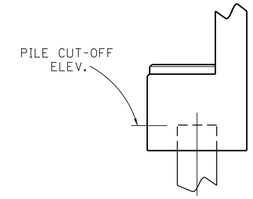

ABUTMENT NO. 2

NOTE TO CONTRACTOR AND CONSTRUCTION OFFICE:
THE BLANKS ON THIS SHEET ARE TO BE FILLED IN BY THE CONSTRUCTION OFFICE AND/OR FIELD ENGINEER GIVING AS BUILT CONDITIONS. AFTER COMPLETION, IT IS TO BE SENT TO THE DIVISION OF STRUCTURES TO BECOME PART OF FINAL BRIDGE DOCUMENTS.

TABLE SHOWING PILE NUMBERS, PILE CUT-OFF ELEVATIONS AND LENGTHS

TABLE SHOWING PILE NUMBERS, PILE CUT-OFF ELEVATIONS AND LENGTHS

		1	2	3	4	5	6	7	8	9
ABUT. NO. 1	PILE CUT-OFF ELEV.									
	PILE TIP ELEV.									
	IN PLACE PILE LENGTH									
BENT NO. 1 FOOTING "A"	PILE CUT-OFF ELEV.									
	PILE TIP ELEV.									
	IN PLACE PILE LENGTH									
BENT NO. 1 FOOTING "B"	PILE CUT-OFF ELEV.									
	PILE TIP ELEV.									
	IN PLACE PILE LENGTH									
ABUT NO. 2	PILE CUT-OFF ELEV.									
	PILE TIP ELEV.									
	IN PLACE PILE LENGTH									

STATE OF TENNESSEE
DEPARTMENT OF TRANSPORTATION

FINAL FOUNDATION DATA
MURPHY HOLLOW ROAD
OVER INTERSTATE 24
STATION 58+33.50
MARION COUNTY
2014

DESIGNED BY T. JOHNSON DATE 5-13
DRAWN BY D. EASTERLY DATE 2-14
SUPERVISED BY J.W.F./T.E.H. DATE 2-14
CHECKED BY TERI JOHNSON DATE 3-14

CORRECT Wayne G. Seger
ENGINEER OF STRUCTURES

U-66-18

BS1099F.DGN

BILL OF STEEL

SUPERSTRUCTURE (EPOXY-COATED)

BAR	LOCATION	SIZE	NO. REQ'D	BENDING DIMENSIONS A	B	C	D	LENGTH
A500E	(1) SLAB	5	62					16'-7"
A501E	(1) SLAB	5	62					60'-0"
A502E	(1) SLAB	5	114					30'-0"
SERIES								
A503E	SLAB	5	2					84'-5"
				LENGTH VARIES 15'-4 1/8"				
				TO 5'-9" IN INC.				
				OF 1'-4 7/8" (8 BARS)				
A504E	SLAB	5	560					15'-7"
SERIES								
A505E	SLAB	5	2					55'-11"
				LENGTH VARIES 12'-1 1/4"				
				TO 3'-10 1/2" IN INC.				
				OF 1'-4 1/2" (7 BARS)				
A506E	SLAB	5	564					13'-4"
SERIES								
A507E	SLAB	5	2					87'-10"
				LENGTH VARIES 14'-4 1/4"				
				TO 5'-2" IN INC.				
				OF 1'-1 3/4" (9 BARS)				
SERIES								
A508E	SLAB	5	2					55'-1"
				LENGTH VARIES 12'-7 1/4"				
				TO 5'-9" IN INC.				
				OF 1'-4 1/2" (6 BARS)				
A509E	SLAB	5	288					6'-0"
A510E	SLAB	5	216					30'-0"
A511E	SLAB	5	27					7'-2"
A800E	(1) SLAB	8	83					30'-0"
AX500E	SLAB	5	574	2'-4"	2'-2"			4'-6"
B570E	SLAB/PARAPET	5	1496	2'-8"				3'-3"

SUPERSTRUCTURE (REGULAR)

BAR	LOCATION	SIZE	NO. REQ'D	BENDING DIMENSIONS A	B	C	D	LENGTH
A512	DIAPHRAGM	5	36					5'-8"
CD500	DIAPHRAGM	5	24	3'-3"	2'-2"	1'-4"		5'-5"
F500	DIAPHRAGM	5	24	2'-2"	2'-7 3/8"	2'-2"	3'-3 3/4"	8'-0"
LS400	DIAPHRAGM	4	8	1'-2"	1'-2"			5'-5"
LS401	DIAPHRAGM	4	18	1'-2"	4'-2"			11'-5"

NOTE: BAR NUMBERS ARE REPEATED ON BILL OF STEEL FOR EACH SUBSTRUCTURE. THE SUPPLIER SHALL SHIP THE BARS TO THE JOB SITE WITH THE SUBSTRUCTURE DESIGNATION INCLUDED AS PART OF THE LABEL.

ABUTMENT NO. 1 (EPOXY-COATED)

BAR	LOCATION	SIZE	NO. REQ'D	BENDING DIMENSIONS A	B	C	D	LENGTH
A640E	ENDWALL	6	68					5'-3"
A641E	ENDWALL	6	2					15'-5"
A642E	ENDWALL	6	2					18'-0"
A649E	ENDWALL	6	8					4'-4"
AX640E	ENDWALL	6	2	2'-11"	2'-9"			5'-8"
B570E	WW/PARAPET	5	72	2'-8"				3'-3"
B640E	ENDWALL	6	2	5'-0"				5'-8"
HP570E	WW/PARAPET	5	16	3 1/4"	3'-10"	1'-0 1/4"		7'-11"
R640E	ENDWALL/SLAB	6	30	3'-3"	2'-11"			6'-2"

ABUTMENT NO. 1 (REGULAR)

BAR	LOCATION	SIZE	NO. REQ'D	BENDING DIMENSIONS A	B	C	D	LENGTH
A440	RDWY. BRKT.	4	1					16'-5"
A441	RDY. BRKT.	4	1					13'-10"
A442	WINGWALL	4	17					5'-2"
A443	WINGWALL	4	7					18'-9"
A444	WINGWALL	4	18					5'-8"
A445	WINGWALL	4	7					19'-2"
A540	ABUT. BEAM	5	4					18'-11"
A541	ABUT. BEAM	5	4					16'-4"
A542	WING BEAM	5	4					20'-9"
A543	WING BEAM	5	4					21'-7"
A643	WINGWALL	6	17					5'-2"
A644	WINGWALL	6	7					18'-9"
A645	WINGWALL	6	18					5'-8"
A646	WINGWALL	6	7					19'-2"
A647	ENDWALL	6	12					15'-5"
A648	ENDWALL	6	12					18'-0"
A650	ABUT. BM./ENDWALL	6	8					4'-1'
A740	ABUT. BEAM	7	16					18'-11"
A741	ABUT. BEAM	7	16					16'-4"
A742	WING BEAM	7	12					20'-9"
A743	WING BEAM	7	12					21'-7'
AX440	ROADWAY BRACKET	4	1	1'-10"	1'-8"			3'-6"
AX540	ABUTMENT BEAM	5	4	2'-4'	2'-2"			4'-6"
AX640	ENDWALL	6	12	2'-11'	23'-9"			5'-8"
AX740	ABUTMENT BEAM	7	16	3'-11"	3'-9"			7'-8"
B641	ENDWALL	6	12	5'-0"				5'-8"
H440	RISER BLOCK	4	8	2'-1"	1'-6"			5'-1"
H441	RISER BLOCK	4	6	2'-6"	1'-6"			5'-6"
H540	RDY. BRKT./EW	5	30	2'-2"	6"			3'-2"
H640	A. BM./EW/W. BM./WW	6	65	1'-2"	4'-1"			9'-4"
HA640	BEAM STOP	6	24	3'-0"	2'-6"	1'-6"		7'-0"
LS540	ABUT. BEAM	5	34	3'-8"	3'-8"			15'-7"
LS541	WING BEAM	5	34	2'-8"	3'-8"			13'-7"

ABUTMENT NO. 2 (EPOXY-COATED)

BAR	LOCATION	SIZE	NO. REQ'D	BENDING DIMENSIONS A	B	C	D	LENGTH
A640E	ENDWALL	6	68					5'-3"
A641E	ENDWALL	6	2					18'-0"
A642E	ENDWALL	6	2					15'-5"
A649E	ENDWALL	6	8					4'-4"
AX640E	ENDWALL	6	2	2'-11"	2'-1"			5'-8"
B570E	WW/PARAPET	5	72	2'-8"				3'-3"
B640E	ENDWALL	6	2	5'-0"				5'-8"
HP570E	WW/PARAPET	5	16	3 1/4"	3'-10"	1'-0 1/4"		7'-11"
R640E	ENDWALL/SLAB	6	30	3'-3"	2'-11"			6'-2"

CONST. NO. 58100-1165-94

PROJECT NO.	YEAR	SHEET NO.
BR-I-24-2(142)	2014	

REVISIONS

NO.	DATE	BY	BRIEF DESCRIPTION
1	5-30-14	TJ	REVISED SUPERSTRUCTURE BARS

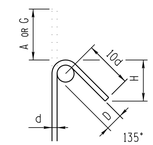

BAR SIZE	D (IN.)	135° HOOK HOOK A OR G	135° HOOK H APPROX.
#4	2	4 1/2"	3"
#5	2 1/2	5 1/2"	3 3/4"
#6	4 1/2	8"	4 1/2"
#7	5 1/4	9"	5 1/4"
#8	6	10 1/2"	6"

135° SEISMIC STIRRUP/TIE HOOK DIMENSIONS (ALL GRADES)

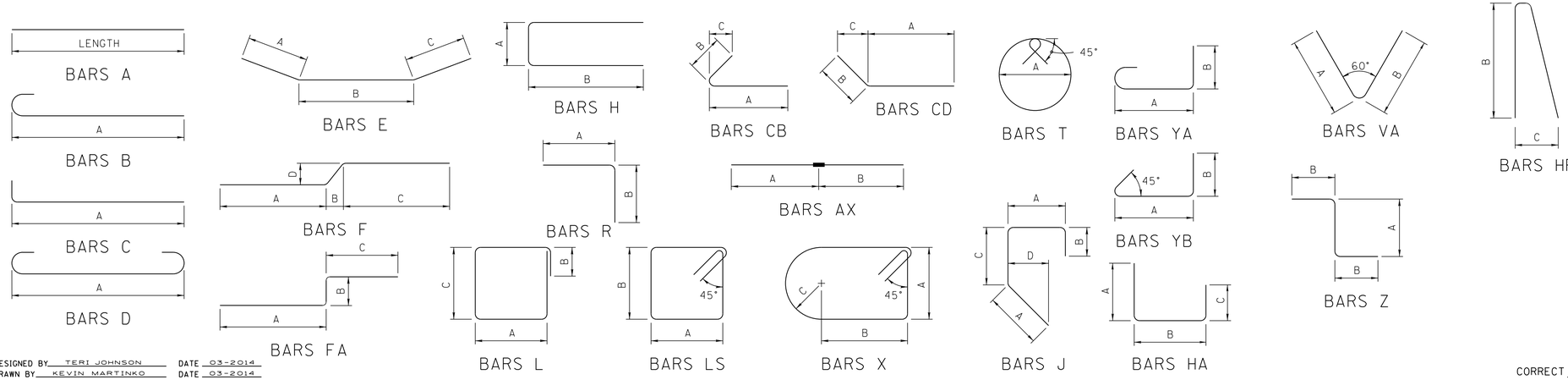

DESIGNED BY TERI JOHNSON DATE 03-2014
DRAWN BY KEVIN MARTINKO DATE 03-2014
SUPERVISED BY FIELDS/HUFF DATE 03-2014
CHECKED BY TERI JOHNSON DATE 03-2014

06-11-2014

REINFORCING STEEL CODE

TYPE	SIZE	SERIES
A	5	06

NOTE: DIMENSIONS SHOWN ON THIS SHEET ARE OUTSIDE TO OUTSIDE OF BAR. STANDARD C.R.S.I. HOOK DETAILS SHALL APPLY, EXCEPT AS NOTED.

NOTE: THE SUFFIX E FOR BARS SO MARKED DENOTES EPOXY COATED REINFORCEMENT.

STATE OF TENNESSEE
DEPARTMENT OF TRANSPORTATION

BILL OF STEEL
MURPHY HOLLOW ROAD
OVER INTERSTATE 24
STATION 58+33.50
MARION COUNTY
2014

CORRECT
ENGINEER OF STRUCTURES

U-66-19

BS1099F.DGN

BILL OF STEEL

ABUTMENT NO. 2 (REGULAR)

BAR	LOCATION	SIZE	NO. REQ'D	BENDING DIMENSIONS A	B	C	D	LENGTH
A440	RDWY. BRKT.	4	1					16'-5"
A441	RDY. BRKT.	4	1					13'-10"
A442	WINGWALL	4	17					5'-2"
A443	WINGWALL	4	7					18'-9"
A444	WINGWALL	4	18					5'-7"
A445	WINGWALL	4	7					19'-2'
A540	ABUT. BEAM	5	6					18'-11"
A541	ABUT. BEAM	5	6					16'-4"
A542	WING BEAM	5	6					20'-9"
A543	WING BEAM	5	6					21'-7'
A643	WINGWALL	6	17					5'-2"
A644	WINGWALL	6	7					18'-9"
A645	WINGWALL	6	18					5'-7"
A646	WINGWALL	6	7					19'-2"
A647	ENDWALL	6	12					18'-0"
A648	ENDWALL	6	12					15'-5'
A650	ABUT. BM./ENDWALL	6	8					4'-1'
A740	ABUT. BEAM	7	16					18'-11"
A7541	ABUT. BEAM	7	16					16'-4"
A742	WING BEAM	7	12					20'-9"
A743	WING BEAM	7	12					21'-7'
AX440	ROADWAY BRACKET	4	1	1'-10"	1'-8"			3'-6"
AX540	ABUTMENT BEAM	5	4	2'-4'	2'-2"			4'-6"
AX640	ENDWALL	6	12	2'-11'	23'-9"			5'-8"
AX740	ABUTMENT BEAM	7	16	3'-11"	3'-9"			7'-8"
B641	ENDWALL	6	12	5'-0"				5'-8"
H440	RISER BLOCK	4	8	2'-1"	1'-6"			5'-1"
H441	RISER BLOCK	4	6	2'-6"	1'-6"			5'-6"
H540	RDY. BRKT./EW	5	30	2'-2"	6"			3'-2"
H640	A. BM./EW/W. BM./WW	6	65	1'-2"	4'-1"			9'-4"
HA640	BEAM STOP	6	24	3'-0"	2'-6"	1'-6"		7'-0"
LS540	ABUT. BEAM	5	34	3'-8"	3'-8"			15'-7"
LS541	WING BEAM	5	34	2'-8"	3'-8"			13'-7"

BENT NO. 1

BAR	LOCATION	SIZE	NO. REQ'D	BENDING DIMENSIONS A	B	C	D	LENGTH
A550	CAP BEAM	5	4					15'-4"
A551	CAP BEAM	5	8					15'-10"
A552	CAP BEAM	5	4					12'-8"
A553	CAP BEAM	5	4					8'-2"
AX500	CAP BEAM	5	6	2'-4"	2'-2"			4'-6"
A950	CAP BEAM	9	16					15'-4"
AX650	CAP BEAM	6	8	2'-11"	2'-9"			5'-8"
AX950	CAP BEAM	9	16	6'-4"	6'-2"			12'-6"
A1050	CAP BEAM/COLUMN	10	48					19'-5"
B950	CAP BEAM	9	16	15'-10"				17'-3"
C1050	COLUMN	10	48	10'-6"				11'-11"
D950	FOOTING (1)	9	48	11'-6"				14'-4"
D951	FOOTING (1)	9	36	7'-5"				10'-3"
E650	CAP BEAM	6	16	5'-4"	3'-7"	7'-4"		16'-3"
H650	(1) CAP BEAM	6	16	2'-5"	4'-2"			10'-9"
LS450	CAP BEAM/COL./FOOTING	4	88	3'-5"	3'-5"			14'-7"
LS650	(1) CAP BEAM	6	16	2'-5"	2'-8"			11'-6"
SERIES LS651	(1) CAP BEAM	6	4	2'-5"	•			156'-0"
				DIM. "B" VARIES FROM 2'-9" TO 4'-1" IN INC. OF 1 7/16" (12 BARS)				
SERIES LS652	(1) CAP BEAM	6	4	2'-5"	•			155'-0"
				DIM. "B" VARIES FROM 2'-9" TO 4'-0" IN INC. OF 1 3/8" (12 BARS)				
YB450	CAP BEAM/COL./FOOTING	4	352	3'-5"	7"			4'-6"

BAR	LOCATION	SIZE	NO. REQ'D	BENDING DIMENSIONS A	B	C	D	LENGTH

BAR	LOCATION	SIZE	NO. REQ'D	BENDING DIMENSIONS A	B	C	D	LENGTH

NOTE: BAR NUMBERS ARE REPEATED ON BILL OF STEEL FOR EACH SUBSTRUCTURE. THE SUPPLIER SHALL SHIP THE BARS TO THE JOB SITE WITH THE SUBSTRUCTURE DESIGNATION INCLUDED AS PART OF THE LABEL.

CONST. NO. 58100-1165-94

PROJECT NO.	YEAR	SHEET NO.
BR-I-24-2(142)	2014	

REVISIONS

NO.	DATE	BY	BRIEF DESCRIPTION
1	5-30-14	TJ	REVISED BENT BARS

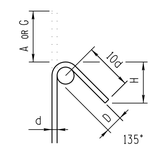

BAR SIZE	D (IN.)	135° HOOK HOOK A OR G	H APPROX.
#4	2	4 1/2"	3"
#5	2 1/2	5 1/2"	3 3/4"
#6	4 1/2	8"	4 1/2"
#7	5 1/4	9"	5 1/4"
#8	6	10 1/2"	6"

135° SEISMIC STIRRUP/TIE HOOK DIMENSIONS (ALL GRADES)

06-11-2014

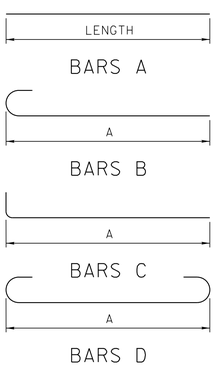

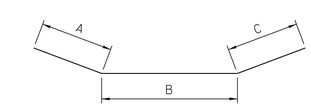

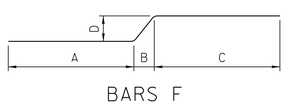

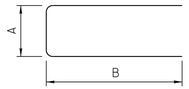

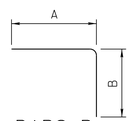

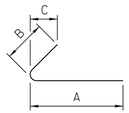

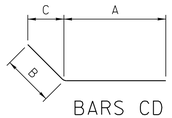

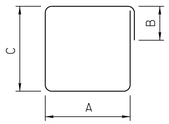

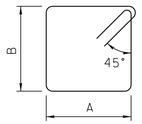

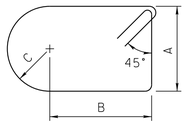

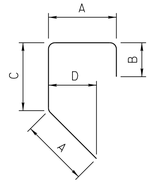

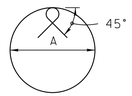

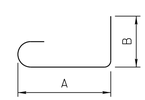

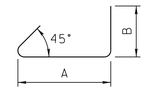

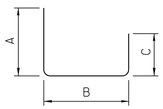

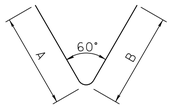

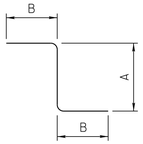

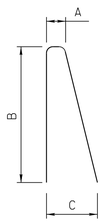

REINFORCING STEEL CODE

TYPE	SIZE	SERIES
A	5	06

NOTE: DIMENSIONS SHOWN ON THIS SHEET ARE OUTSIDE TO OUTSIDE OF BAR. STANDARD C.R.S.I. HOOK DETAILS SHALL APPLY, EXCEPT AS NOTED.

NOTE: THE SUFFIX E FOR BARS SO MARKED DENOTES EPOXY COATED REINFORCEMENT.

STATE OF TENNESSEE
DEPARTMENT OF TRANSPORTATION

BILL OF STEEL
MURPHY HOLLOW ROAD
OVER INTERSTATE 24
STATION 58+33.50
MARION COUNTY
2014

DESIGNED BY	TERI JOHNSON	DATE	03-2014
DRAWN BY	KEVIN MARTINKO	DATE	03-2014
SUPERVISED BY	FIELDS/HUFF	DATE	03-2014
CHECKED BY	TERI JOHNSON	DATE	03-2014

CORRECT _____ ENGINEER OF STRUCTURES

U-66-20

dgnspec
Plot Date
Time