SHT1020.DGN

TYPE	YEAR	PROJECT NO.	SHEET NO.
CONST.	2012	NHE-15(108)	2

CONST. NO. 36001-3290-14

HARDIN COUNTY

ESTIMATED BRIDGE QUANTITIES

ITEM NO.	DESCRIPTION	X081	X081			GRAND TOTAL	UNIT
		BRIDGE NO. 1 STATE ROUTE 15 OVER SMITH FORK CREEK STA. 591+50.00 CONTINUOUS PRECAST PRESTRESSED 54" BULB-TEE BEAMS WITH COMPOSITE CONCRETE DECK SLAB 3 SPAN BRIDGE TOTAL LENGTH = 300'-0" SPAN 1 = 100'-3" SPAN 2 = 99'-6" SPAN 3 = 100'-3" 2 - 42'-0" ROADWAYS WITH STD-1-1SS PARAPETS 90° SKEW LAYOUT DWG. NO. U-52-93	BRIDGE NO. 2 STATE ROUTE 15 OVER BIGBEE BRANCH STA. 748+55.75 CONTINUOUS PRECAST PRESTRESSED 54" BULB-TEE BEAMS WITH COMPOSITE CONCRETE DECK SLAB 3 SPAN BRIDGE SPAN 1 = 84'-1" SPAN 2 = 83'-4" SPAN 3 = 84'-1" 2 - 42'-0" ROADWAYS WITH STD-1-1SS PARAPETS 90° TO TANGENT LINE LAYOUT DWG. NO. U-52-113	RETAINING WALL NO. 1 STA. 454+12.53 TO STA. 457+12.12 TOTAL LENGTH = 299'-8" DWG. NO. U-50-99	RETAINING WALL NO. 2 STA. 733+00.00 TO STA. 734+00.00 TOTAL LENGTH = 100'-0" DWG. NO. U-50-100		
		QUANTITY	QUANTITY				
202-04.01	REMOVAL OF STRUCTURES (EXIST. BR. NO. 36-SR15-17.87)	1				1	L.S.
202-04.02	REMOVAL OF STRUCTURES (EXIST. BR. NO. 36-SR15-20.85)		1			1	L.S.
204-02.01	DRY EXCAVATION (BRIDGES)	498	580			1,078	C.Y.
204-03.01	WET EXCAVATION (BRIDGES)	300	892			1,192	C.Y.
204-04.01	ROCK EXCAVATION (BRIDGES)	36				36	C.Y.
204-05	ROCK DRILLING (BRIDGES)	144				144	L.F.
204-10.01	FOUNDATION PREPARATION (BENT NO. 1 LT. LN., STA. 591+00.25)	1				1	L.S.
204-10.02	FOUNDATION PREPARATION (BENT NO. 2 LT. LN., STA. 591+99.75)	1				1	L.S.
204-10.03	FOUNDATION PREPARATION (BENT NO. 1 RT. LN., STA. 591+00.25)	1				1	L.S.
204-10.04	FOUNDATION PREPARATION (BENT NO. 2 RT. LN., STA. 591+99.75)	1				1	L.S.
204-10.05	FOUNDATION PREPARATION (BENT NO. 1 LT. LN., STA. 748+14.08)		1			1	L.S.
204-10.06	FOUNDATION PREPARATION (BENT NO. 2 LT. LN., STA. 748+97.42)		1			1	L.S.
204-10.07	FOUNDATION PREPARATION (BENT NO. 1 RT. LN., STA. 748+14.08)		1			1	L.S.
204-10.08	FOUNDATION PREPARATION (BENT NO. 2 RT. LN., STA. 748+97.42)		1			1	L.S.
303-01.02	GRANULAR BACKFILL (BRIDGES)	68	60			128	TON
604-02.03	EPOXY COATED REINFORCING STEEL	207,498	155,676			363,174	LB.
604-03.01	CLASS 'A' CONCRETE (BRIDGES)	594	604			1,198	C.Y.
604-03.02	STEEL BAR REINFORCEMENT (BRIDGES)	107,842	86,938			194,780	LB.
604-03.04	PAVEMENT AT BRIDGE ENDS	430	430			860	S.Y.
604-03.09	CLASS 'D' CONCRETE (BRIDGE DECK)	766	628			1,394	C.Y.
604-04.01	APPLIED TEXTURE FINISH (NEW STRUCTURES)	3,216	2,627			5,843	S.Y.
604-05.31	BRIDGE DECK GROOVING (MECHANICAL)	3,004	2,584			5,588	S.Y.
604-07.01	RETAINING WALL NO. 1			4,034		4,034	S.F.
604-07.02	RETAINING WALL NO. 2				547	547	S.F.
606-02.03	STEEL PILES (10 INCH)	1,555	3,438			4,993	L.F.
606-02.06	PILE TIPS (STEEL PILES, 10 INCH)	40	144			184	EA.
615-01.10	PRESTRESSED CONCRETE BULB-TEE BEAM (6" WEB) (BT-54)	2,940	2,456			5,396	L.F.
620-05.01	CONCRETE PARAPET SINGLE SLOPE (STD-1-1SS)	1,326	1,132			2,458	L.F.
710-09.01	6" PERF. PIPE WITH VERTICAL DRAIN SYSTEM	264	264			528	L.F.
710-09.02	6" PIPE UNDERDRAIN	70	71			141	L.F.

LIST OF DRAWINGS

	DWG. NO.	LAST REV. DATE
LAYOUT THRU BILL OF STEEL	U-52-93	
	U-52-112	
LAYOUT THRU BILL OF STEEL	U-52-113	
	U-52-135	
RETAINING WALL NO. 1	U-50-99	
RETAINING WALL NO. 2	U-50-100	
RETAINING WALL DETAILS	U-50-101	

LIST OF STANDARD DRAWINGS

	DWG. NO.	LAST REV. DATE
BRIDGE RAILING SINGLE SLOPE CONCRETE PARAPET	STD-1-1SS	6-01-11
SLIDER PLATES FOR SINGLE SLOPE PARAPETS AND DECK DRAINS	STD-1-2SS	
PAVEMENT AT BRIDGE ENDS	STD-1-5	6-01-11
BRIDGE END DRAIN W/ PABE	STD-1-6	4-28-97
BRIDGE END DRAIN W/ PABE	STD-1-7	8-24-11
BRIDGE END DRAIN 4'×8'-7" W/ PABE	STD-1-9	5-01-95
STD. PRECAST PRESTRESSED BRIDGE DECK PANELS GENERAL DETAILS	STD-4-1	4-08-05
STD. PRECAST PRESTRESSED BRIDGE DECK PANELS DESIGN CRITERIA	STD-4-2	4-08-05
STD. PRECAST PRESTRESSED BRIDGE DECK PANELS GENERAL DETAILS	STD-4-3	3-02-02
STD. PRECAST PRESTRESSED BRIDGE DECK PANELS CONSTRUCTION DETAILS	STD-4-4	6-10-96
STANDARD PILE DETAILS	STD-5-1	10-25-93
STANDARD SEISMIC DETAILS	STD-6-1	11-01-10
REINF. BAR SUPPORT DETAILS FOR CONC. SLABS	STD-9-1	10-07-08
MISCELLANEOUS ABUTMENT & DRAINAGE DETAILS	STD-10-1	4-08-05
STD. DETAILS AND INTERMEDIATE DIAPHRAGM DETAILS FOR BULB-TEE BEAMS	STD-14-1	10-15-08
SAFETY APPROACH TO UNDERPASSES GRADING DESIGN & SLOPE PROTECTION	RD01-SA-1	10-15-02

STATE OF TENNESSEE
DEPARTMENT OF TRANSPORTATION

ESTIMATED BRIDGE AND RETAINING WALL QUANTITIES

DRAWN BY: P. MOSHER

DGN-pmm5003,SHT\sht1020.dgn
04-APR-2012
07:40

LAY1020.DGN

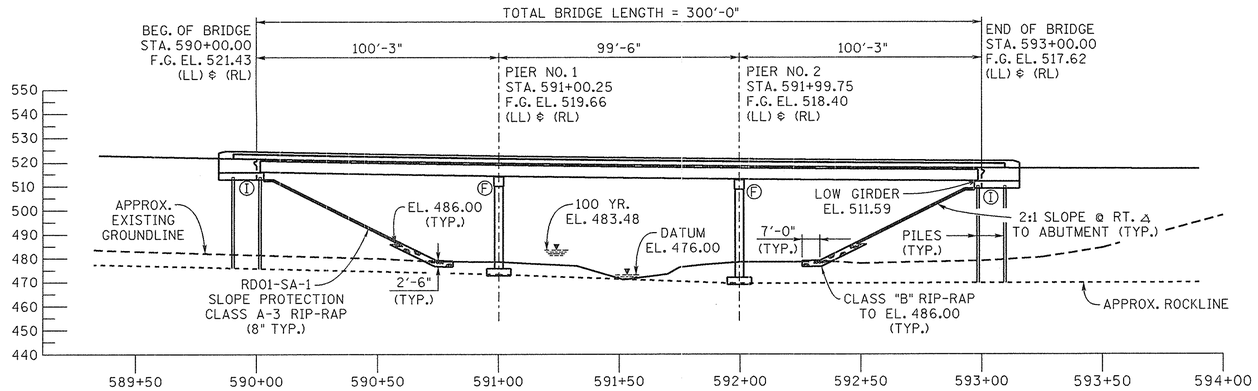

Ⓘ DENOTES INTEGRAL
Ⓕ DENOTES FIXED
(LL) DENOTES LEFT LANE
(RL) DENOTES RIGHT LANE

ELEVATION

SCALE: 1" = 30'

NO SCOUR DUE TO PRESENCE OF ROCK.

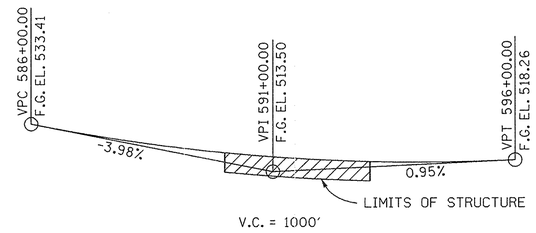

FINISHED GRADE SKETCH

STATE ROUTE 15

CONST. NO. 36001-3290-14

PROJECT NO.	YEAR	SHEET NO.
NHE-15(108)	2012	

REVISIONS

NO.	DATE	BY	BRIEF DESCRIPTION

LIST OF DRAWINGS

	DWG. NO.	LAST REV. DATE
LAYOUT OF BRIDGE	U-52-93	-----
GENERAL NOTES ℄ ESTIMATED QUANTITIES	U-52-94	-----
FOUNDATION DATA	U-52-95	-----
FOUNDATION DATA	U-52-96	-----
SUPERSTRUCTURE (LEFT ℄ RIGHT LANES)	U-52-97	-----
SUPERSTRUCTURE DETAILS (LEFT ℄ RIGHT LANES)	U-52-98	-----
PRESTRESSED BULB-TEE BEAM DETAILS	U-52-99	-----
ABUTMENT NO. 1 (LEFT LANE)	U-52-100	-----
ABUTMENT NO. 2 (LEFT LANE)	U-52-101	-----
ABUTMENT NO. 1 (RIGHT LANE)	U-52-102	-----
ABUTMENT NO. 2 (RIGHT LANE)	U-52-103	-----
ABUTMENT NOS. 1 ℄ 2 DETAILS (LEFT ℄ RIGHT LANES)	U-52-104	-----
PIER NO. 1 (LEFT LANE)	U-52-105	-----
PIER NO. 2 (LEFT LANE)	U-52-106	-----
PIER NO. 1 (RIGHT LANE)	U-52-107	-----
PIER NO. 2 (RIGHT LANE)	U-52-108	-----
PIER NOS. 1 ℄ 2 DETAILS (LEFT ℄ RIGHT LANES)	U-52-109	-----
FINAL FOUNDATION DATA	U-52-110	-----
BILL OF STEEL	U-52-111	-----
BILL OF STEEL	U-52-112	-----

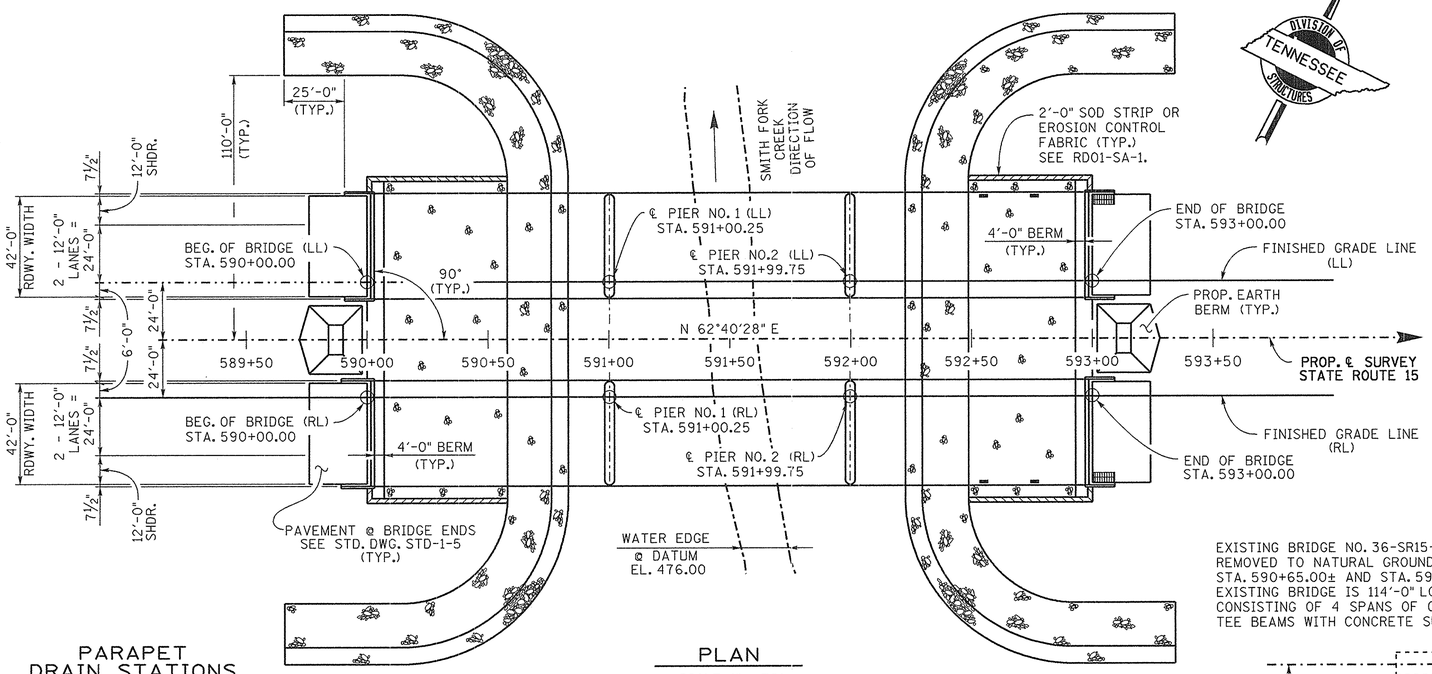

PLAN

SCALE: 1" = 30'

PARAPET DRAIN STATIONS

EACH SIDE

STA. 592+55.00
STA. 592+76.00

▦ DENOTES 4' × 8'-7" END OF BRIDGE DRAINS SEE STD-1-6, 7 ℄ 9 (TYP.)

▬ DENOTES PARAPET DECK DRAINS. SEE STD-1-2SS (TYP.)

NOTE: ANY WORK WITHIN THE STREAM CHANNEL AREA (E.G., FOR PIER FOOTING, RIP-RAP PLACEMENT, MULTI-BARREL CULVERT/BRIDGE CONSTRUCTION, ETC.) SHALL BE SEPARATED FROM FLOWING WATER OR EXPECTED FLOW PATH AND PERFORMED DURING LOW FLOW CONDITIONS. ALL ITEMS USED WITHIN THE STREAM CHANNEL AREA FOR DIVERSION OF FLOW (OR EXPECTED FLOW), UNLESS SPECIFIED IN THE PLANS, SHALL NOT BE PAID FOR DIRECTLY BUT SHALL BE INCLUDED IN THE COST OF OTHER ITEMS. THIS NOTE EXCLUDES ANY ITEMS SPECIFIED IN THE PLANS FOR THE TEMPORARY DIVERSION CHANNELS, EC-STR-31 AND TEMPORARY DIVERSION CULVERTS, EC-STR-32 FOR SINGLE BARREL CULVERT CONSTRUCTION.

EXISTING BRIDGE NO. 36-SR15-17.87 TO BE REMOVED TO NATURAL GROUNDLINE BETWEEN STA. 590+65.00± AND STA. 591+85.00±. EXISTING BRIDGE IS 114'-0" LONG AND 34'-0" WIDE CONSISTING OF 4 SPANS OF CONCRETE TEE BEAMS WITH CONCRETE SUBSTRUCTURE.

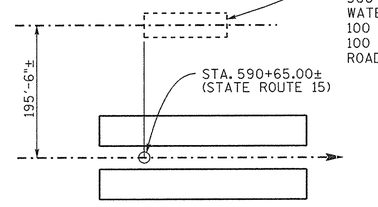

SITE PLAN

SHOWING LOCATION OF EXISTING STRUCTURE

HYDRAULIC DATA

DRAINAGE AREA = 9.80 MI²
DESIGN DISCHARGE (100 YR.) = 5050 CFS
500 YR. DISCHARGE = 7050 CFS @ EL. 484.65
WATER AREA PROVIDED BELOW EL. 484.84 = 8189.85 FT²
100 YR. VELOCITY = 5.89 FPS
100 YR. BRIDGE BACKWATER = 0.63 FT @ EL. 483.48 FT.
ROADWAY OVERTOPPING ELEVATION = 516.57

LIST OF STANDARD DRAWINGS

	DWG. NO.	LAST REV. DATE
BRIDGE RAILING SINGLE SLOPE CONCRETE PARAPET	STD-1-1SS	6-01-11
SLIDER PLATES FOR SINGLE SLOPE PARAPETS AND DECK DRAINS	STD-1-2SS	-----
PAVEMENT AT BRIDGE ENDS	STD-1-5	6-01-11
BRIDGE END DRAIN W/ PABE	STD-1-6	4-28-97
BRIDGE END DRAIN W/ PABE	STD-1-7	8-24-11
BRIDGE END DRAIN 4'×8'-7" W/ PABE	STD-1-9	5-01-95
STD. PRECAST PRESTRESSED BRIDGE DECK PANELS GENERAL DETAILS	STD-4-1	4-08-05
STD. PRECAST PRESTRESSED BRIDGE DECK PANELS DESIGN CRITERIA	STD-4-2	4-08-05
STD. PRECAST PRESTRESSED BRIDGE DECK PANELS GENERAL DETAILS	STD-4-3	3-02-02
STD. PRECAST PRESTRESSED BRIDGE DECK PANELS CONSTRUCTION DETAILS	STD-4-4	6-10-96
STANDARD PILE DETAILS	STD-5-1	10-25-93
STANDARD SEISMIC DETAILS	STD-6-1	11-01-10
REINF. BAR SUPPORT DETAILS FOR CONC. SLABS	STD-9-1	10-07-08
MISCELLANEOUS ABUTMENT ℄ DRAINAGE DETAILS	STD-10-1	4-08-05
STD. DETAILS AND INTERMEDIATE DIAPHRAGM DETAILS FOR BULB-TEE BEAMS	STD-14-1	10-15-08
SAFETY APPROACH TO UNDERPASSES GRADING DESIGN ℄ SLOPE PROTECTION	RD01-SA-1	10-15-02

2 - 42'-0" ROADWAYS WITH STD-1-1SS PARAPET
2029 ADT = 10,175
DESIGN SPEED = 65 MPH

BRIDGE NO. 1

STATE OF TENNESSEE
DEPARTMENT OF TRANSPORTATION

LAYOUT OF BRIDGE
STATE ROUTE 15
OVER
SMITH FORK CREEK
BRIDGE I.D. NO. 36SR0150021
STATION 591+50.00
LOG MILE 17.87
HARDIN COUNTY
2012

KATHLEEN D. McLAUGHLIN — STATE OF TENNESSEE — 6/28/12

CORRECT Wayne J. Sieger
ENGINEER OF STRUCTURES

DESIGNED BY	D. SHIKE (K.E.)	DATE	9-10
DRAWN BY	P. MOSHER (DJS/MTJ)	DATE	9-11
SUPERVISED BY	MBC/KDM	DATE	9-11
CHECKED BY	DJS	DATE	1-12

D:\pwworking\LAY\LAY1020.dgn
Jun 28, 2012
11:51

U-52-93

MACHINED RIP-RAP CLASS "A-3" = 570 TONS MACHINED RIP-RAP CLASS "B" = 3070 TONS

GN1020.DGN

GENERAL NOTES

SPECIFICATIONS: STANDARD ROAD AND BRIDGE SPECIFICATIONS OF THE TENNESSEE DEPARTMENT OF TRANSPORTATION (MARCH 1, 2006 EDITION).

LOADING: HL-93 LIVE LOADING, SEISMIC CATEGORY A WITH AS = 0.127, SDS = 0.295, SD1 = 0.098, (1000 YEAR RETURN PERIOD). DEAD LOAD INCLUDES 35 LB/FT² FOR FUTURE WEARING SURFACE.

DESIGN SPECIFICATIONS: AASHTO LRFD FIFTH EDITION 2010, WITH ADDENDA, AND THE 2009 AASHTO GUIDE SPECIFICATIONS FOR LRFD SEISMIC BRIDGE DESIGN, EDITION 1 (WITH INTERIMS.)

CONCRETE: TO BE CLASS "A" (CAST IN PLACE) f'c = 3,000 psi EXCEPT AS NOTED OTHERWISE.

CLASS "D" CONCRETE FOR BRIDGE DECKS SHALL BE IN ACCORDANCE WITH SECTION 604 OF THE STANDARD SPECIFICATIONS.

BRIDGE DECK SURFACE FINISH: TO BE IN ACCORDANCE WITH NOTE "C" IN ARTICLE 604.22 OF THE STANDARD SPECIFICATIONS.

BRIDGE DECK FORMS: BRIDGE DECK FORMS FOR CONCRETE DECKS SHALL BE CONSTRUCTED USING EITHER REMOVABLE FORMS OR PERMANENT FORMS. PERMANENT FORMS MAY BE EITHER REMAIN-IN-PLACE STEEL OR PRECAST, PRESTRESSED CONCRETE PANELS. IN EITHER CASE, FORMS SHALL BE ATTACHED BY MEANS OTHER THAN WELDING TO MAIN STRUCTURAL MEMBERS OR REINFORCING STEEL. TEMPORARY ERECTION DIAPHRAGMS MUST BE USED AT THE ENDS OF PRECAST CONCRETE GIRDERS WHERE END DIAPHRAGMS, SUPPORT DIAPHRAGMS, OR ABUTMENT BACKWALLS ARE TO BE POURED CONCURRENTLY WITH THE DECK AND SHALL BE PROVIDED ELSEWHERE IN ACCORDANCE WITH THE SPECIFICATIONS TO PREVENT GIRDER ROTATION. SEE STANDARD DRAWINGS STD-4-1 THRU 4, STD-14-1 AND ARTICLE 604.05 OF THE STANDARD SPECIFICATIONS.

SPECIAL NOTE - FOOTING FOR BENTS: AFTER EXCAVATION TO ROCK FOR FOOTING HAS BEEN COMPLETED, HOLES 6' DEEP SHALL BE DRILLED AT POINTS DESIGNATED BY THE ENGINEER. FROM THE RESULTS OBTAINED, THE ENGINEER SHALL DETERMINE THE FINAL FOOTING ELEVATIONS. NO REINFORCING STEEL FOR BENT COLUMNS SHALL BE ORDERED UNTIL FINAL FOOTING ELEVATIONS HAVE BEEN DETERMINED.

PILES: TO BE HP10 × 42 DRIVEN TO REFUSAL ON ROCK OR A MINIMUM BEARING OF 55 TONS FOR THE ABUTMENTS.

BRIDGE RAIL SYSTEM: BUILD BRIDGE RAILINGS ACCORDING TO STANDARD DRAWING STD-1-1SS. THE RAILING SHALL BE FORMED AND CAST PLUMB, NOT PERPENDICULAR TO THE SLAB. THE DIMENSIONS AT THE TRAFFIC FACE SHALL BE KEPT CONSTANT, WITH VARIATION DUE TO CROSS SLOPE ACCOMMODATED AT THE REAR FACE.

NOTE: THE CONTRACTOR SHALL PROVIDE 100% CONVENTIONAL FALL PROTECTION FOR WORKERS INSTALLING DECKING ABOVE 15 FEET.

SHOP DRAWINGS: SEE SECTION 105.02 OF THE STANDARD SPECIFICATIONS.

MACHINED RIP-RAP: MACHINED RIP-RAP FOR SLOPE PROTECTION SHALL BE 2" TO 6" IN SIZE UNIFORMLY GRADED AND MEET THE REQUIREMENTS OF SECTION 709 OF THE STANDARD SPECIFICATIONS FOR ROAD AND BRIDGE CONSTRUCTION AND SHALL BE MEASURED AND PAID FOR UNDER ROADWAY ITEM 709-05.05 - TON

REINFORCING STEEL: SHALL BE ASTM A615 GRADE 60 UNLESS NOTED OTHERWISE. SEE SECTION 604 AND 907 OF THE STANDARD SPECIFICATIONS.

FOUNDATION PREPARATION: SEE SECTION 204 OF THE STANDARD SPECIFICATIONS. IF COFFERDAMS ARE REQUIRED, THEY SHALL BE IN ACCORDANCE WITH SECTION 204.09 OF THE STANDARD SPECIFICATIONS.

RIP-RAP: MACHINED RIP-RAP SHALL BE CLASS "B" IN ACCORDANCE WITH SECTION 709 OF THE STANDARD SPECIFICATIONS AND SHALL BE MEASURED AND PAID FOR UNDER ROADWAY ITEM 709-05.08.

NOTE: THE FILLS AT THE ENDS OF THE BRIDGE SHALL BE IN PLACE AND THOROUGHLY COMPACTED BEFORE ANY ABUTMENT PILES ARE DRIVEN.

FINISHING CONCRETE SURFACES: CONCRETE FINISHING SHALL BE IN ACCORDANCE WITH SECTION 604.21 OF THE TENNESSEE STANDARD SPECIFICATION. A CLASS I FINISH FOLLOWED BY AN APPLIED TEXTURE FINISH SHALL BE USED IN LIEU OF A CLASS II FINISH. NO TEXTURE FINISH SHALL BE APPLIED PRIOR TO COMPLETION OF PAVING AND HAULING OPERATIONS AT THE BRIDGE SITE. THE APPLIED TEXTURE FINISH SHALL BE MEASURED AND PAID FOR UNDER ITEM NO. 604-04.01.

VALUE ENGINEERING ALTERNATE BRIDGE DESIGN CRITERIA: ALTERNATE BRIDGE DESIGN PROPOSALS MAY NOT DIMINISH THE FUNCTIONAL OR STRUCTURAL EQUIVALENCY OF THE BRIDGE AND MUST MEET OR EXCEED BOTH THE SERVICE LEVEL AND ULTIMATE CAPACITIES OF THE CONTRACT PLANS STRUCTURE. ADDITIONALLY, THE WATERWAY OPENING AND FLOOD CLEARANCES MAY NOT BE REDUCED; FOR GRADE SEPARATIONS, THE HORIZONTAL CLEARANCES MAY NOT BE REDUCED, NOR MAY THE VERTICAL CLEARANCES BE LESS THAN THE MINIMUM ACCEPTABLE FOR THE TYPE FACILITY CROSSED.

SLAB OVERHANGS SUPPORTED BY BULB-TEE BEAMS: IT IS RECOMMENDED THAT SPACING OF OVERHANG BRACKETS FOR BULB-TEE BEAMS NOT EXCEED 2'-0" CENTER TO CENTER.

NOTE: PILES SHALL BE EQUIPPED WITH CAST STEEL POINTS. ALSO, SEE STANDARD DRAWING STD-5-1 FOR ADDITIONAL NOTES.

CONST. NO.	36001-3290-14	
PROJECT NO.	YEAR	SHEET NO.
NHE-15(108)	2012	

REVISIONS

NO.	DATE	BY	BRIEF DESCRIPTION

ESTIMATED QUANTITIES

NOTE	ITEM NO.	DESCRIPTION	UNIT	GRAND TOTAL	LEFT LANE TOTAL	LEFT LANE SUPERSTRUCTURE	LEFT LANE ABUTMENT NO. 1	LEFT LANE BENT NO. 1	LEFT LANE BENT NO. 2	LEFT LANE ABUTMENT NO. 2	RIGHT LANE TOTAL	RIGHT LANE SUPERSTRUCTURE	RIGHT LANE ABUTMENT NO. 1	RIGHT LANE BENT NO. 1	RIGHT LANE BENT NO. 2	RIGHT LANE ABUTMENT NO. 2
(10)	202-04.01	REMOVAL OF STRUCTURES (EXISTING BRIDGE NO. 36-SR15-17.87)	L.S.	1												
(2)	204-02.01	DRY EXCAVATION (BRIDGES)	C.Y.	498	238		84	18	53	83	260		84	40	53	83
(2)	204-03.01	WET EXCAVATION (BRIDGES)	C.Y.	300	169			66	103		131			28	103	
(2)	204-04.01	ROCK EXCAVATION (BRIDGES)	C.Y.	36	18			9	9		18			9	9	
	204-05	ROCK DRILLING (BRIDGES)	L.F.	144	72			36	36		72			36	36	
(11)	204-10.01	FOUNDATION PREPARATION (BENT NO. 1 LT. LN., STA. 591+00.25)	L.S.	1	1			1								
(11)	204-10.02	FOUNDATION PREPARATION (BENT NO. 2 LT. LN., STA. 591+99.75)	L.S.	1	1				1							
(11)	204-10.03	FOUNDATION PREPARATION (BENT NO. 1 RT. LN., STA. 591+00.25)	L.S.	1							1			1		
(11)	204-10.04	FOUNDATION PREPARATION (BENT NO. 2 RT. LN., STA. 591+99.75)	L.S.	1							1				1	
(8)	303-01.02	GRANULAR BACKFILL (BRIDGES)	TON	68	34		17			17	34		17			17
	604-02.03	EPOXY COATED REINFORCING STEEL	LB.	207,498	103,749	100,477	1,636			1,636	103,749	100,477	1,636			1,636
(7)	604-03.01	CLASS 'A' CONCRETE (BRIDGES)	C.Y.	594	298		52	97	98	51	296		52	95	98	51
	604-03.02	STEEL BAR REINFORCEMENT (BRIDGES)	LB.	107,842	54,167	1,459	5,683	20,580	20,762	5,683	53,675	1,459	5,683	20,088	20,762	5,683
(1)	604-03.04	PAVEMENT AT BRIDGE ENDS	S.Y.	430	215						215					
	604-03.09	CLASS 'D' CONCRETE (BRIDGE DECK)	C.Y.	766	383	383					383	383				
	604-04.01	APPLIED TEXTURE FINISH (NEW STRUCTURES)	S.Y.	3,216	1,609	1,212	39	162	157	39	1,607	1,212	38	162	157	38
	604-05.31	BRIDGE DECK GROOVING (MECHANICAL)	S.Y.	3,004	1,502						1,502					
	606-02.03	STEEL PILES (10 INCH)	L.F.	1,555	775		385			390	780		370			410
(12)	606-02.06	PILE TIPS (STEEL PILES, 10 INCH)	EA.	40	20		10			10	20		10			10
(5)(4)	615-01.10	PRESTRESSED CONCRETE BULB-TEE BEAM (6" WEB) (BT-54)	L.F.	2,940	1,470						1,470					
(9)	620-05.01	CONCRETE PARAPET SINGLE SLOPE (STD-1-1SS)	L.F.	1,326	663						663					
(6)	710-09.01	6" PERF. PIPE WITH VERTICAL DRAIN SYSTEM	L.F.	264	132		66			66	132		66			66
	710-09.02	6" PIPE UNDERDRAIN	L.F.	70	36		18			18	34		17			17

(1) NOTE: PRIOR TO CONSTRUCTION OF THE PAVEMENT AT BRIDGE ENDS, THE CONTRACTOR SHALL SUBMIT A PROPOSED BILL OF STEEL TO THE ENGINEER FOR APPROVAL.

(2) NOTE: EXCAVATION BASED ON FINAL PROFILE AT ABUTMENTS AND EXISTING GROUND AT BENTS.

(3) NOTE: THE COST OF BITUMINOUS-FIBERBOARD AND ALL MISCELLANEOUS JOINT MATERIAL TO BE INCLUDED IN THE UNIT PRICE BID FOR OTHER ITEMS.

(4) NOTE: COST OF ELASTOMERIC PADS AND RUBBER BONDING CEMENT TO BE INCLUDED IN THE UNIT PRICE BID FOR THE PRESTRESSED BEAM.

(5) NOTE: INTERMEDIATE DIAPHRAGMS SHALL BE PAID FOR IN ACCORDANCE WITH STANDARD DRAWING STD-14-1.

(6) NOTE: COST OF POLYETHYLENE SHEETING AND ALL MISCELLANEOUS ITEMS NECESSARY FOR INSTALLATION TO BE INCLUDED IN THE UNIT PRICE BID FOR PERFORATED PIPE.

(7) NOTE: THE COST OF ALL MATERIALS AND LABOR NECESSARY FOR THE INSTALLATION OF 76 ANCHOR BOLT ASSEMBLIES SHALL BE INCLUDED IN THE UNIT PRICE BID FOR CLASS "A" CONCRETE (BRIDGES), ITEM NO. 604-03.01.

(8) NOTE: GRANULAR BACKFILL SHALL BE CLASS "A" GRADING "D" MATERIAL. SEE STANDARD DRAWING STD-10-1.

(9) NOTE: COST OF 4 BRIDGE DECK DRAINS TO BE INCLUDED IN THE UNIT PRICE FOR THE PARAPET.

(10) NOTE: LUMP SUM: TO INCLUDE COMPLETE REMOVAL OF EXISTING BRIDGE NO. 36-SR15-17.87 TO NATURAL GROUNDLINE BETWEEN STA. 590+65.00 AND STA. 591+85.00. EXISTING BRIDGE IS 114'-0" LONG, 34'-0" WIDE AND CONSISTS OF 4 SPANS OF CONCRETE TEE BEAMS WITH CONCRETE SUBSTRUCTURE.

(11) NOTE: SEE FOUNDATION PREPARATION NOTE THIS SHEET.

(12) NOTE: THE UNIT PRICE BID FOR THE CAST STEEL POINTS SHALL INCLUDE FURNISHING AND INSTALLATION TO PILES.

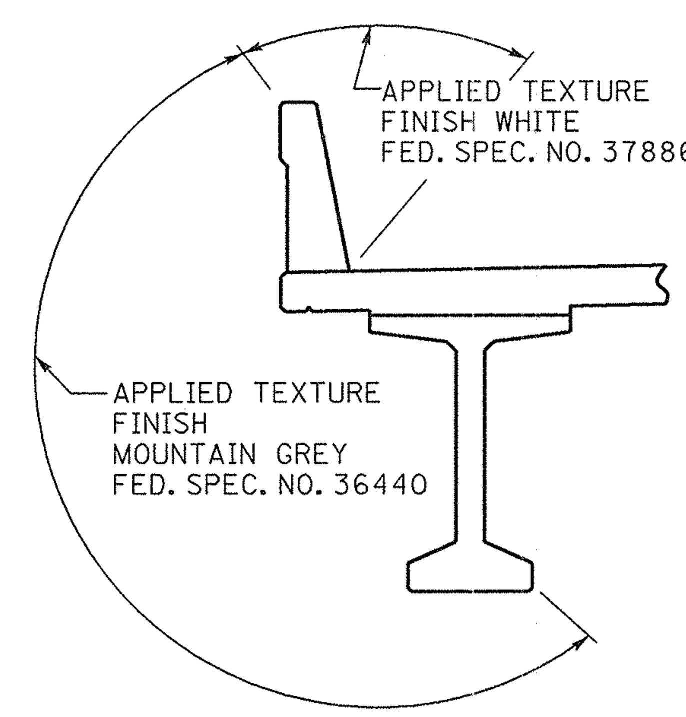

APPLIED TEXTURE FINISH SKETCH

NOTE: IN ADDITION TO THE SURFACES SHOWN IN THE APPLIED TEXTURE FINISH SKETCH ALL EXPOSED SURFACES OF WINGWALLS, ABUTMENT BEAMS, BENTS AND EXTERIOR PORTIONS OF ENDWALLS ARE TO RECEIVE AN APPLIED TEXTURE FINISH (MOUNTAIN GREY, FED. SPEC. NO. 36440).

BRIDGE NO. 1

STATE OF TENNESSEE
DEPARTMENT OF TRANSPORTATION

GENERAL NOTES AND ESTIMATED QUANTITIES
STATE ROUTE 15
OVER
SMITH FORK CREEK
STATION 591+50.00
LOG MILE 17.87
HARDIN COUNTY
2012

KATHLEEN D. McLAUGHLIN Registered Engineer No. 101334 STATE OF TENNESSEE 6/28/12

CORRECT ______ ENGINEER OF STRUCTURES

DESIGNED BY	D. SHIKE	DATE	9-10
DRAWN BY	P. MOSHER	DATE	10-11
SUPERVISED BY	MBC/KDM	DATE	10-11
CHECKED BY	DJS	DATE	1-12

D:\pmmdgn\GN\GN1020.dgn 18-JAN-2012 15:12

U-52-94

DAT1020.DGN

CONST. NO. 36001-3290-14

PROJECT NO.	YEAR	SHEET NO.
NHE-15(108)	2012	

REVISIONS

NO.	DATE	BY	BRIEF DESCRIPTION

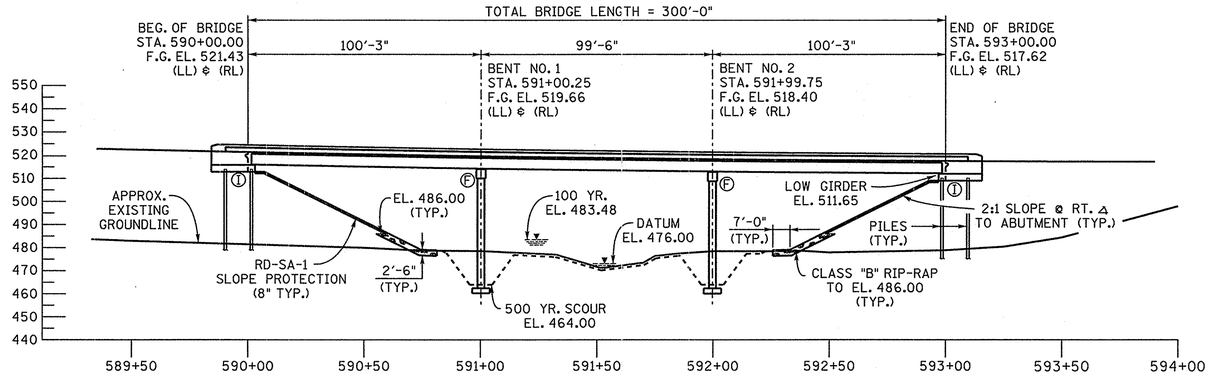

Ⓘ DENOTES INTEGRAL
Ⓕ DENOTES FIXED
(LL) DENOTES LEFT LANE
(RL) DENOTES RIGHT LANE

ELEVATION

SCALE: 1" = 30'

100 YEAR CONTRACTION ℄ PIER SCOUR = EL. 470.00

BORING NO.	STATION	OFFSET	GROUND ELEV.	ROCK ELEV.
1	590+02	57'LT	480.4	474.4
2	590+02	17'LT	481.2	475.7
3	590+02	17'RT	481.7	476.2
4	590+02	60'RT	482.3	476.8
5	591+00	60'LT	476.8	472.8
6	590+98	17'LT	477.1	472.6
7	591+07	17'RT	478.0	474.0
8	590+97	60'RT	478.3	474.3
9	591+94	60'LT	478.4	468.9
10	591+95	17'LT	479.2	469.7
11	592+08	20'RT	478.8	469.3
12	591+94	60'RT	478.8	470.3
13	592+93	61'LT	479.2	472.2
14	592+98	20'LT	479.4	469.4
15	592+93	17'RT	479.1	468.6
16	592+93	60'RT	479.0	469.0

REQUIRED:

1) SUFFICIENT GROUND, ROCK AND CORING INFORMATION FOR BRIDGE FOUNDATION.
2) APPROXIMATE EXISTING GROUND AND ROCK LINE.
3) DESIGN SPECIFICATIONS: AASHTO LRFD FIFTH EDITION, 2010, WITH ADDENDA, AND THE 2009 AASHTO GUIDE SPECIFICATIONS FOR LRFD SEISMIC BRIDGE DESIGN, EDITION 1 (WITH INTERIMS). SEISMIC CATEGORY A WITH AS = 0.126, SDS = 0.294, SD1 = 0.097, (1000 YR. RETURN PERIOD.)

BENCHMARKS:

T.B.M. # 18
PK NAIL IN 10" POPLAR TREE, 1.0' ABOVE GROUND, 21' W. OF EXIST ℄ SHADY GROVE LOOP, 661' S. OF EXIST. STATE ROUTE 15.
STA 579+11.66, 428.03' RT.
ELEV. 556.58

T.B.M. #19
C.P.S. IN S. FACE OF POWER POLE #20508 1.0' ABOVE GROUND, 116' N. OF EXIST. STATE ROUTE 15
STA 592+70.24, 300.02' LT.
ELEV. 478.84

T.B.M. #20
C.P.S. IN S. FACE OF 18" PINE TREE 47' N OF EXIST. ℄ S.R. 15, APPROX. 150' W. OF GPS MONUMENT 36-15-51.
STA 603+69.96, 214.78' LT.
ELEV. 536.94

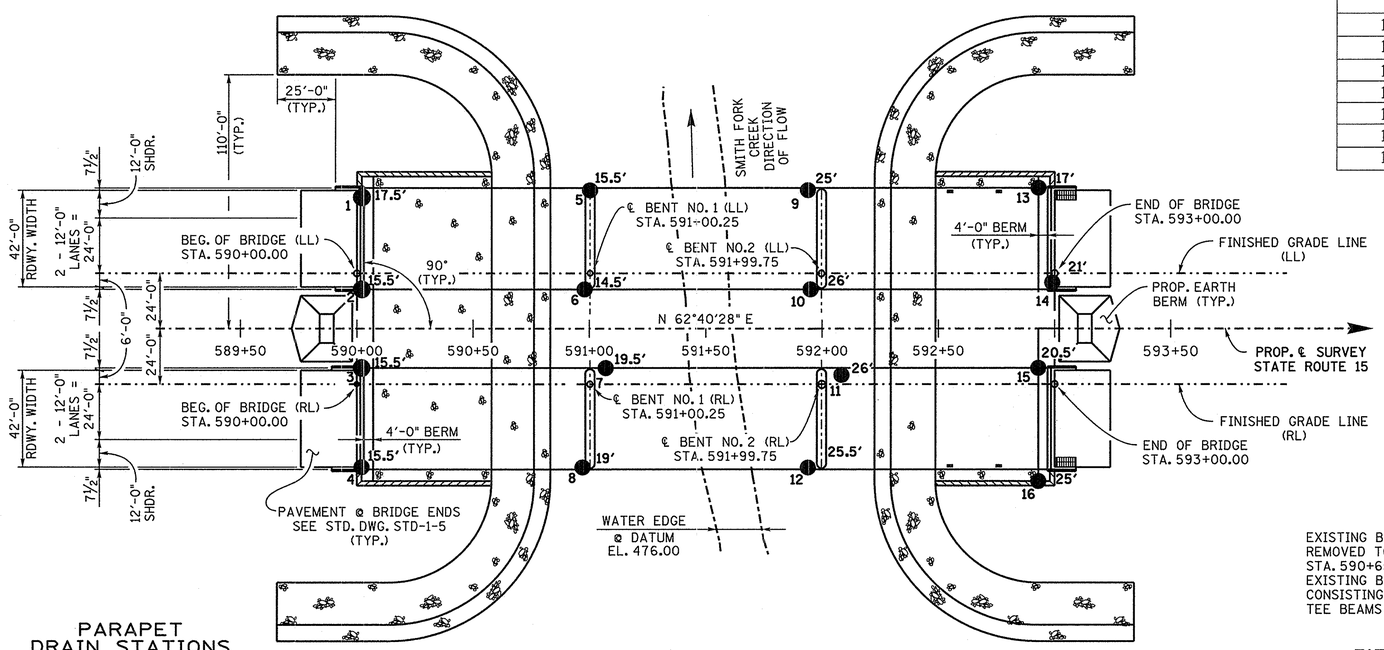

PARAPET DRAIN STATIONS

EACH SIDE

STA. 592+55.00
STA. 592+76.00

PLAN

SCALE: 1" = 30'

EXISTING BRIDGE NO. 36-SR15-17.87 TO BE REMOVED TO NATURAL GROUNDLINE BETWEEN STA. 590+65.00± AND STA. 591+85.00±. EXISTING BRIDGE IS 114'-0" LONG AND 34'-0" WIDE CONSISTING OF 4 SPANS OF CONCRETE TEE BEAMS WITH CONCRETE SUBSTRUCTURE.

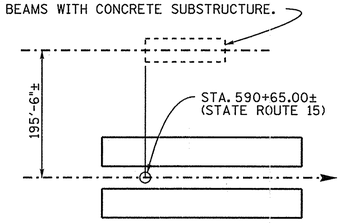

SITE PLAN

SHOWING LOCATION OF EXISTING STRUCTURE

NOTE: THIS DRAWING IS FOR FOUNDATION DATA ONLY AND IS NOT TO BE USED AS A LAYOUT.

DENOTES 4' × 8'-7" END OF BRIDGE DRAINS SEE STD-1-6, 7 ℄ 8 (TYP.)

DENOTES PARAPET DECK DRAINS. SEE STD-1-2 (TYP.)

BRIDGE NO. 1

STATE OF TENNESSEE
DEPARTMENT OF TRANSPORTATION
FOUNDATION DATA
STATE ROUTE 15
OVER
SMITH FORK CREEK
BRIDGE I.D. NO. 36SR0150021
STATION 591+50.00
LOG MILE 17.87
HARDIN COUNTY
2012

CORRECT Wayne G. Sieger
ENGINEER OF STRUCTURES

U-52-95

DESIGNED BY	D. SHIKE (K.E.)	DATE	09-10
DRAWN BY	M. DYE (DJS/MTJ/SMM)	DATE	09-11
SUPERVISED BY	MBC/KDM	DATE	09-11
CHECKED BY		DATE	

D:\mark.dye\dgn\dat\Dat1020.DGN
09-26-2012

DAT1020.DGN

CONST. NO. 36001-3290-14

PROJECT NO.	YEAR	SHEET NO.
NHE-15(108)	2012	

REVISIONS

NO.	DATE	BY	BRIEF DESCRIPTION

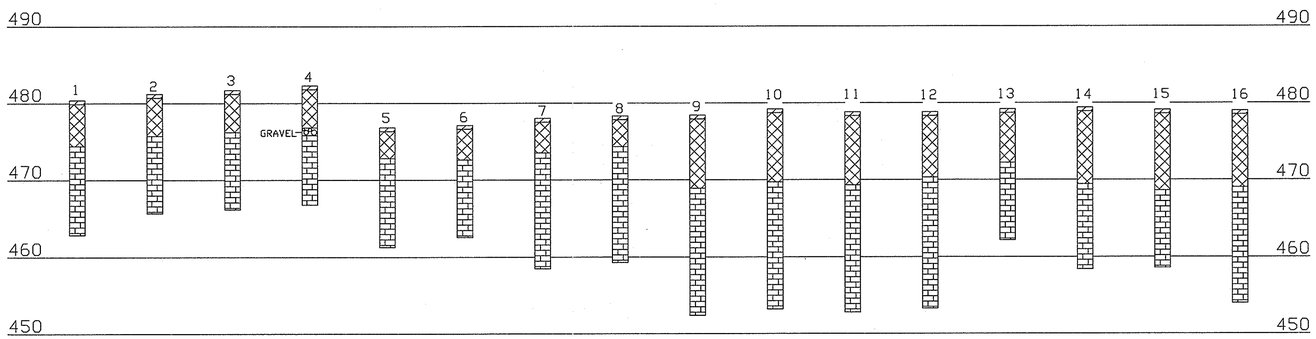

—LEGEND—

CLAY

LIMESTONE (SLIGHTLY WEATHERED TO SOUND)

17.5' TERMINATED DEPTH

CORE NO. 1 2

NOTE:

BORING DEPICTIONS SHOWN ON FOUNDATION DATA SHEET INDICATE GENERAL SOIL AND ROCK TYPES AT THE SPECIFIC BORING LOCATIONS.

TO ASSIST IN BID PREPARATION FOR FOUNDATION CONSTRUCTION. DETAIL ROCK AND SOIL DESCRIPTION AND ROCK SAMPLES MAY BE AVAILABLE FOR INSPECTION.

BRIDGE NO. 1

STATE OF TENNESSEE
DEPARTMENT OF TRANSPORTATION

FOUNDATION DATA
STATE ROUTE 15
OVER
SMITH FORK CREEK
BRIDGE I.D. NO. 36SR0150021
STATION 591+50.00
LOG MILE 17.87
HARDIN COUNTY
2012

CORRECT Wayne G. Sieger
ENGINEER OF STRUCTURES

U-52-96

DESIGNED BY D. SHIKE (K.E.) DATE 09-10
DRAWN BY M. DYE (DJS/MTJ/SMM) DATE 09-11
SUPERVISED BY MBC/KDM DATE 09-11
CHECKED BY DATE

D:\mark.dye\dgn\dat\Dat1020.DGN
09-26-2012
09:26

SUP1020.DGN

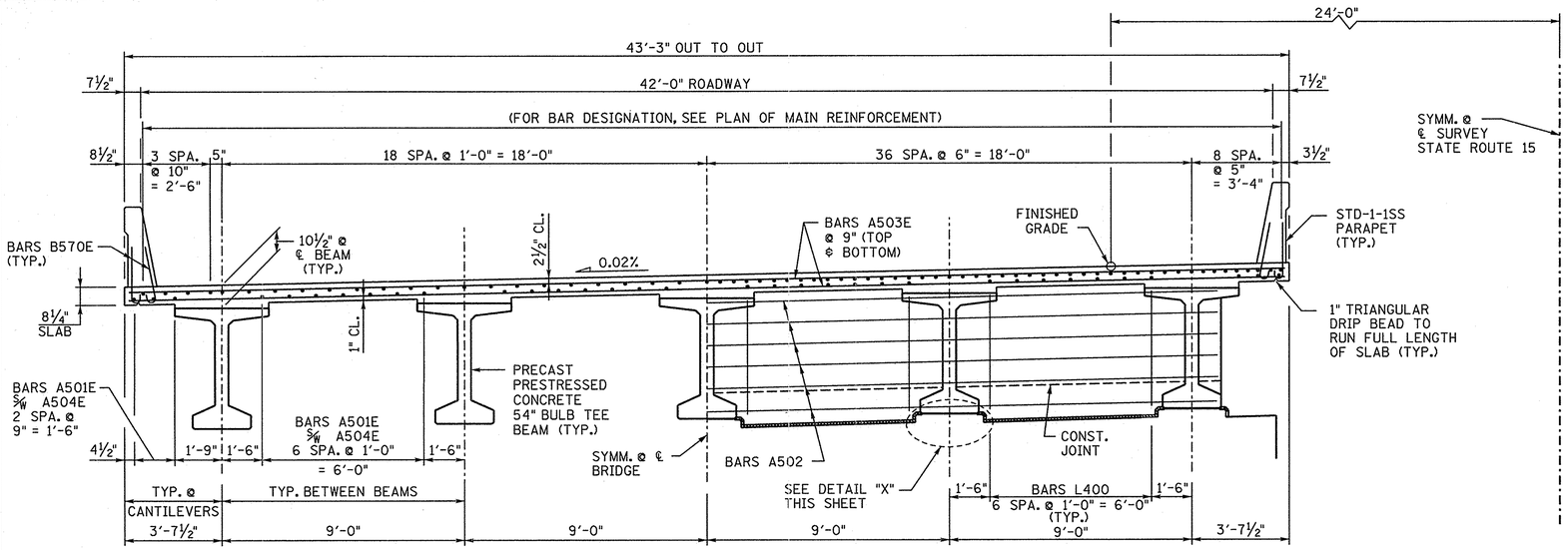

AT MIDSPAN
(@ SPAN NO. 2)

@ SUPPORT

TYPICAL CROSS SECTION

(LOOKING FORWARD ON SURVEY)
(LEFT LANE SHOWN, RIGHT LANE TYP.)

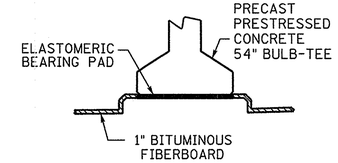

DETAIL "X"

CONST. NO.	36001-3290-14	
PROJECT NO.	YEAR	SHEET NO.
NHE-15(108)	2012	

REVISIONS

NO.	DATE	BY	BRIEF DESCRIPTION

NOTE: NO PORTION OF THE PARAPET SHALL BE POURED UNTIL THE ENTIRE DECK SLAB IS IN PLACE.

NOTE: WHEN POURING SLAB, PROVISIONS SHALL BE MADE FOR SETTING REINFORCING STEEL FOR PARAPET. THE PARAPET SHALL NOT BE POURED UNTIL THE SLAB IS POURED AND CURED. ALSO, SEE DRAWING NO. STD-1-1SS.

NOTE: THE CONTRACTOR IS SOLELY RESPONSIBLE FOR SUPPORTING THE BEAMS TO PREVENT DAMAGE DUE TO TWISTING OR OVERTURNING DURING ALL PHASES OF CONSTRUCTION. IT IS STRONGLY RECOMMENDED THAT THE TEMPORARY ERECTION DIAPHRAGMS BE INSTALLED AND THE PERMANENT INTERMEDIATE DIAPHRAGMS BE POURED AND CURED PRIOR TO PLACING ANY LOADS ON THE GIRDERS. HOWEVER, TEMPORARY ERECTION DIAPHRAGMS AND PERMANENT INTERMEDIATE DIAPHRAGMS MUST BE IN PLACE IN THE SPAN AT THE TIME THE SLAB IS POURED IN SAID SPAN.

NOTE: THE SUPPORT DIAPHRAGMS AT THE PIERS SHALL BE FORMED AND THE BOTTOM 15 INCHES POURED AS SOON AS POSSIBLE AFTER THE BEAMS HAVE BEEN SET. THE REMAINDER OF THE DIAPHRAGM SHALL BE POURED CONCURRENTLY WITH THE DECK SLAB. THE BEAMS SHALL ATTAIN AN AGE OF AT LEAST 90 DAYS PRIOR TO POURING THE REMAINDER OF THE SUPPORT DIAPHRAGMS AND DECK SLAB. ALL DIAPHRAGM CONCRETE SHALL BE INCLUDED IN THE QUANTITY FOR ITEM NO. 604-03.09.

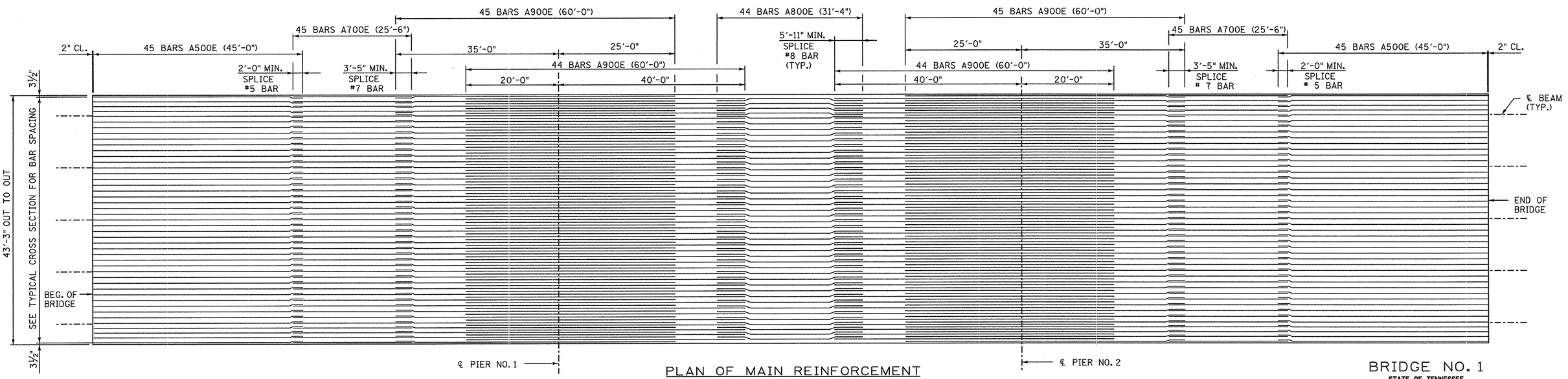

PLAN OF MAIN REINFORCEMENT

(LEFT LANE SHOWN, RIGHT LANE TYP.)

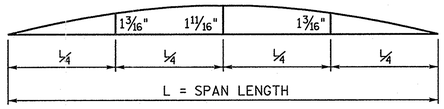

DEAD LOAD CORRECTION CURVE

(LEFT LANE SHOWN, RIGHT LANE TYP.)

DEAD LOAD CORRECTION CURVE: THIS CURVE IS FOR DEAD LOAD SLAB AND ALL DEAD LOADS THAT ARE APPLIED AFTER SLAB IS IN PLACE AND SHOULD BE CORRECTED TO COMPENSATE FOR THE EFFECTS DUE TO VERTICAL CURVE.

NOTE: IF PRESTRESSED DECK PANELS ARE USED AND THE BEAMS ARE PROFILED AFTER PANELS ARE IN PLACE, REDUCE THE DEAD LOAD CORRECTION VALUES SHOWN BY 25%.

ESTIMATED QUANTITIES

(PER LANE)

CLASS 'D' CONCRETE (BRIDGE DECK) C.Y.	STEEL BAR REINFORCEMENT (BRIDGES) LBS.	EPOXY COATED REINFORCING STEEL LBS.
383	1,459	100,477

BRIDGE NO. 1
STATE OF TENNESSEE
DEPARTMENT OF TRANSPORTATION
SUPERSTRUCTURE
(LEFT & RIGHT LANE)
STATE ROUTE 15
OVER
SMITH FORK CREEK
STATION 591+50.00
LOG MILE 17.87
HARDIN COUNTY
2012

CORRECT _____
ENGINEER OF STRUCTURES

DESIGNED BY	D. SHIKE	DATE	9-10
DRAWN BY	Q. BONDS	DATE	7-11
SUPERVISED BY	MBC/KDM	DATE	7-11
CHECKED BY	D. SHIKE	DATE	01-12

D:\New Folder\DGN\SUP\SUP1020.dgn
03-30-2012

U-52-97

SUP1020.DGN

CONST. NO. 36001-3290-14

PROJECT NO.	YEAR	SHEET NO.
NHE-15(108)	2012	

REVISIONS

NO.	DATE	BY	BRIEF DESCRIPTION

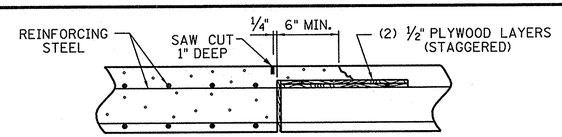

SLAB CONSTRUCTION JOINT DETAIL

DECK CONCRETE POURING SEQUENCE: SLAB CONSTRUCTION JOINTS MAY BE LOCATED AT THE CONTRACTOR'S OPTION SUBJECT TO THE FOLLOWING: NO CONSTRUCTION JOINT MAY BE LOCATED CLOSER THAN 10 FEET OR FURTHER THAN 15 FEET FROM AN INTERIOR SUPPORT.

THE SLAB IN THE MIDDLE SECTION OF BOTH ADJACENT SPANS MUST BE POURED TO WITHIN AT LEAST 15 FEET OF THE SUPPORTS EITHER PRIOR TO OR CONCURRENTLY WITH THE SLAB OVER AN INTERIOR SUPPORT.

ALL SLAB CONSTRUCTION JOINTS SHALL BE IN ACCORDANCE WITH THE SLAB CONSTRUCTION JOINT DETAIL SHOWN ABOVE.

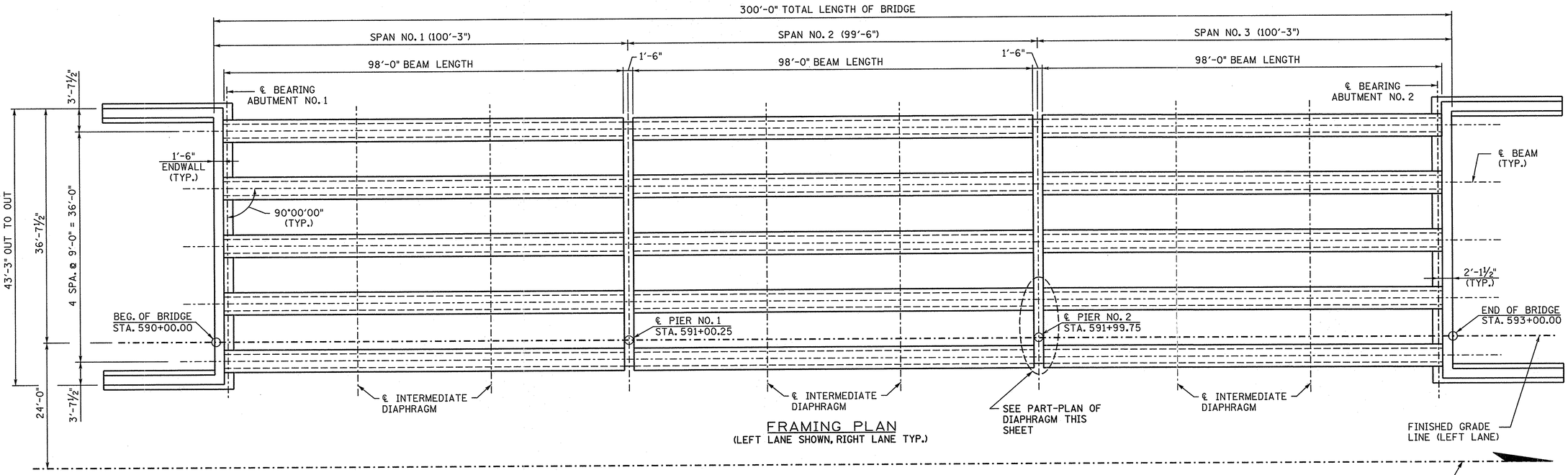

FRAMING PLAN

(LEFT LANE SHOWN, RIGHT LANE TYP.)

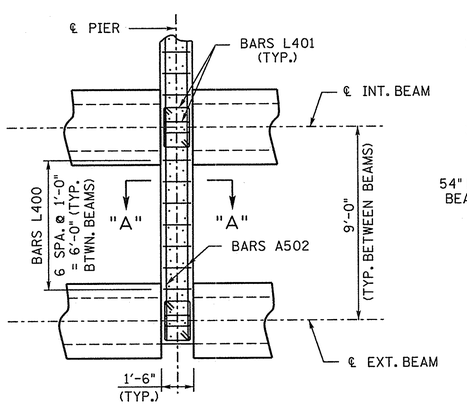

PART-PLAN OF DIAPHRAGM

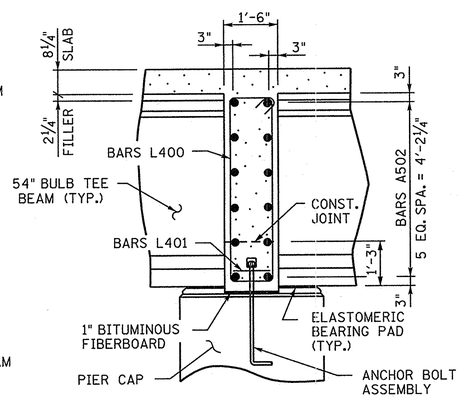

SECTION "A"-"A"

SPECIAL NOTE FOR ANCHOR BOLTS AT PIERS: ANCHOR BOLT ASSEMBLIES AT PIERS SHALL BE IN ACCORDANCE WITH STANDARD DRAWING STD-6-1.

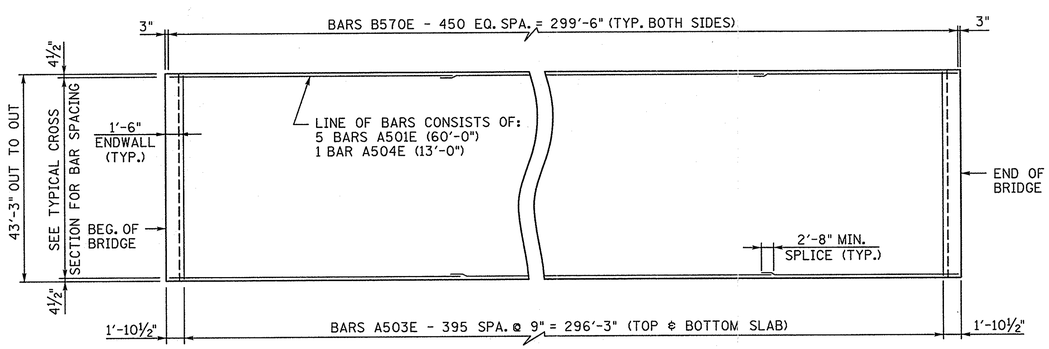

SLAB PLAN

BRIDGE NO. 1
STATE OF TENNESSEE
DEPARTMENT OF TRANSPORTATION
SUPERSTRUCTURE DETAILS
(LEFT & RIGHT LANE)
STATE ROUTE 15
OVER
SMITH FORK CREEK
STATION 591+50.00
LOG MILE 17.87
HARDIN COUNTY
2012

KATHLEEN D. McLAUGHLIN — STATE OF TENNESSEE — REGISTERED PROFESSIONAL ENGINEER — No. 112551 — 6/20/12

CORRECT Wayne G. Sieg
ENGINEER OF STRUCTURES

DESIGNED BY	D. SHIKE	DATE	9-10
DRAWN BY	Q. BONDS	DATE	7-11
SUPERVISED BY	MBC/KDM	DATE	7-11
CHECKED BY	D. SHIKE	DATE	01-12

D:\New Folder\DGN\SUP\SUP1020.dgn
13-JAN-2012
09:24

U-52-98

TBM1020.DGN

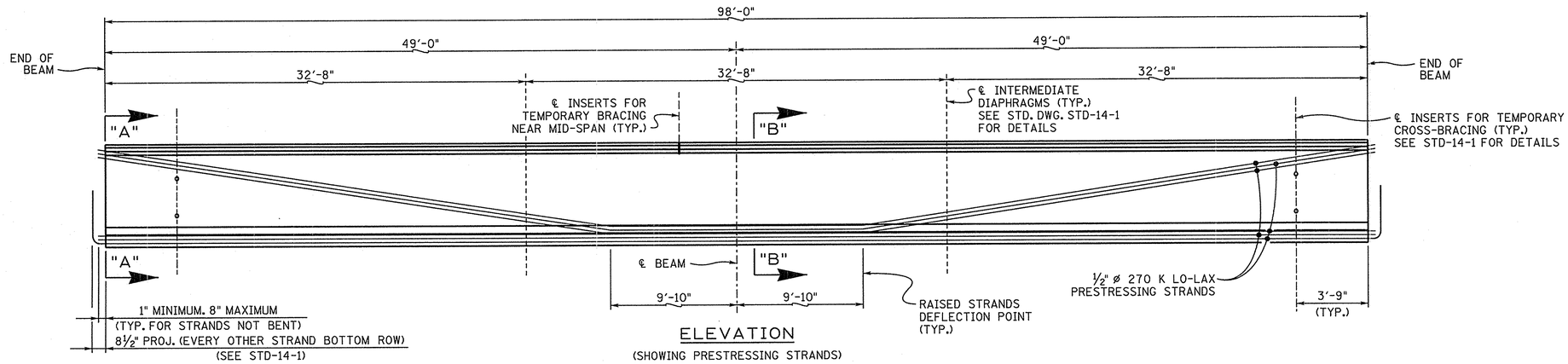

ELEVATION

(SHOWING PRESTRESSING STRANDS)

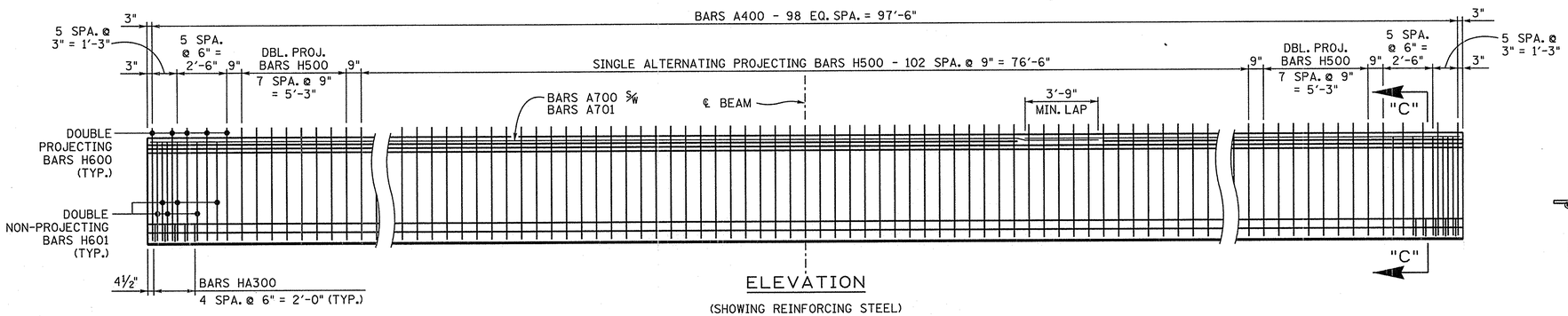

ELEVATION

(SHOWING REINFORCING STEEL)

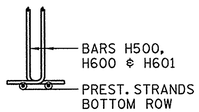

DETAIL X

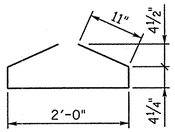

BARS HA300

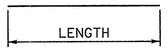

BARS A400, A500, A700 & A701

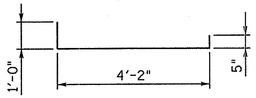

BARS H601

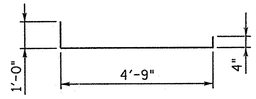

BARS H500, H600

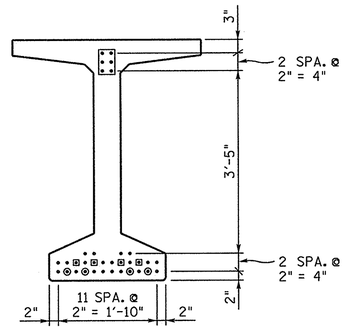

SECTION "A"-"A"

SHOWING PRESTRESSING STRANDS

⊙ DENOTES: BREAK BOND 3'-0" FROM END OF BEAM

⊡ DENOTES: BREAK BOND 6'-0" FROM END OF BEAM

DENOTES: DRAPED STRANDS

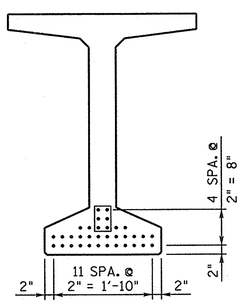

SECTION "B"-"B"

SHOWING PRESTRESSING STRANDS

DENOTES: DRAPED STRANDS

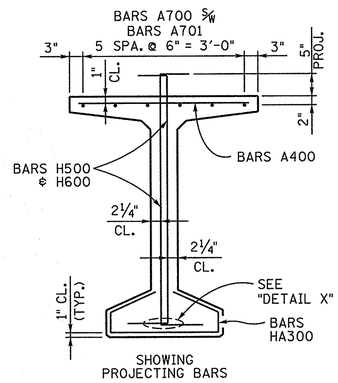

SHOWING PROJECTING BARS

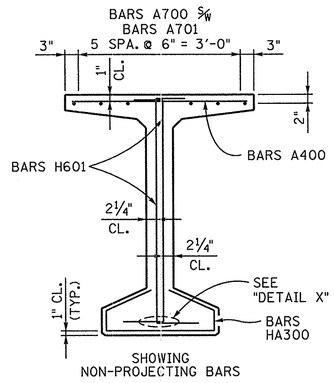

SHOWING NON-PROJECTING BARS

SECTION "C"-"C"

PRESTRESSED BEAM DESIGN DATA - PER BEAM

LIVE LOAD DISTRIBUTION FACTOR FOR MOMENT = 0.856 LANES
LIVE LOAD DISTRIBUTION FACTOR FOR SHEAR = 0.884 LANES
COMPOSITE DEAD LOAD: DC = 150 LB/FT
COMPOSITE DEAD LOAD: DW = 286 LB/FT
COMPOSITE SLAB DESIGN STRENGTH: f'c = 3,000 PSI

NOTE: DOWNWARD DEFLECTION UNDER TOTAL DL IS NOT ALLOWED.

CONST. NO. 36001-3290-14

PROJECT NO.	YEAR	SHEET NO.
NHE-15(108)	2012	

REVISIONS

NO.	DATE	BY	BRIEF DESCRIPTION

1. SEE STD-14-1 FOR BULB-TEE BEAM STANDARD DETAILS AND NOTES.
2. ALL BEAMS ARE BT-54.
3. THE CONCRETE FOR THIS CONSTRUCTION SHALL BE OF SUCH PROPERTIES AS TO ATTAIN A COMPRESSIVE STRENGTH OF NOT LESS THAN 7,000 PSI AT THE AGE OF 28 DAYS AND STRESS TRANSFER SHALL NOT BE MADE TO THE BRIDGE MEMBER UNTIL THE TEST SPECIMENS INDICATE THAT THE CONCRETE HAS REACHED A COMPRESSIVE STRENGTH OF AT LEAST 5,500 PSI. SEE GENERAL NOTES FOR CONCRETE FINISHING NOTE.
4. ALL PRESTRESSING STRANDS SHOWN ARE 270 KSI LO-LAX, HAVING A ½" ø, AN AREA OF 0.153 IN. AND A JACKING LOAD OF 31,000 LBS.
5. THE PRESTRESSED BEAMS SHALL ATTAIN AN AGE OF AT LEAST 90 DAYS PRIOR TO POURING THE SUPPORT DIAPHRAGMS (EXCLUDING BOTTOM 15 INCHES) AND DECK SLAB.

BILL OF STEEL

(PER BEAM)

BAR	SIZE	NO. REQ'D	LENGTH
A400	4	99	3'-2"
A500	5	4	5'-6"
A700	7	6	60'-0"
A701	7	6	41'-5"
H500	5	135	6'-1"
H600	6	20	6'-1"
H601	6	24	5'-7"
HA300	3	10	4'-7"

ESTIMATED QUANTITIES

(PER BEAM)

NO. BEAMS REQ'D	PRESTRESSING STRANDS (LOW RELAXATION) LB.	CLASS "A" CONCRETE C.Y.	REINFORCING STEEL LB.
30	1,772	17	2,734

BRIDGE NO. 1

STATE OF TENNESSEE
DEPARTMENT OF TRANSPORTATION

PRESTRESSED BULB-TEE BEAM
STATE ROUTE 15
OVER
SMITH FORK CREEK
STATION 591+50.00
LOG MILE 17.87
HARDIN COUNTY
2012

KATHLEEN D. McLAUGHLIN — STATE OF TENNESSEE — REGISTERED PROFESSIONAL ENGINEER — No. 101886 — 6/28/12

CORRECT Wayne G. Sieger
ENGINEER OF STRUCTURES

U-52-99

DESIGNED BY	D. SHIKE	DATE	09-10
DRAWN BY	DIANE BUSH (JDT)	DATE	07-11
SUPERVISED BY	MBC / KDM	DATE	07-11
CHECKED BY	DJS	DATE	01-12

D:\dgn\tbm\TBM1020.dgn
06/28/2012
10:03

ABT1020.DGN

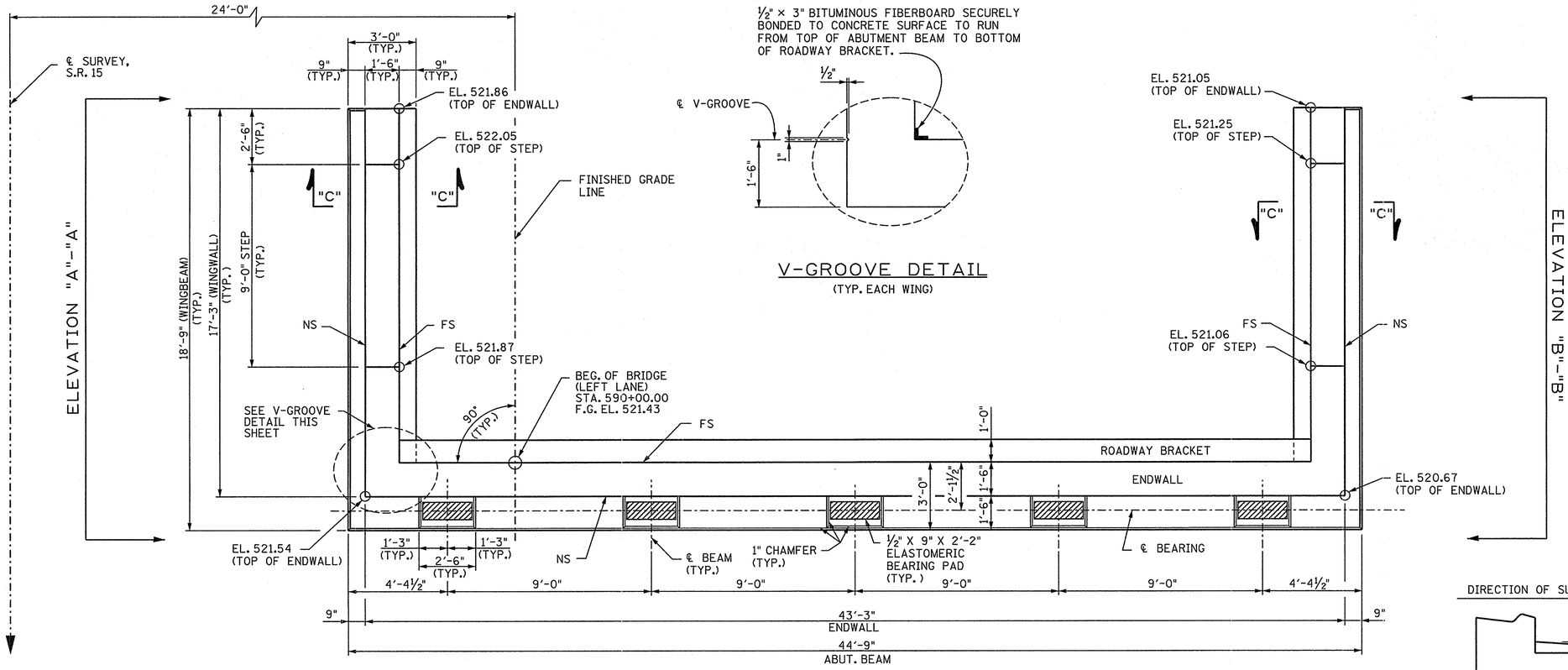

PLAN

V-GROOVE DETAIL

(TYP. EACH WING)

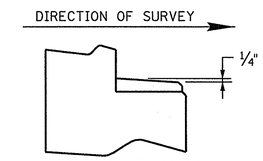

RISER BLOCK SLOPE DETAIL

(TYPICAL EACH RISER BLOCK)

NOTE: RISER BLOCK BEARING SURFACE TO CONFORM TO BOTTOM OF BEAM GRADE.

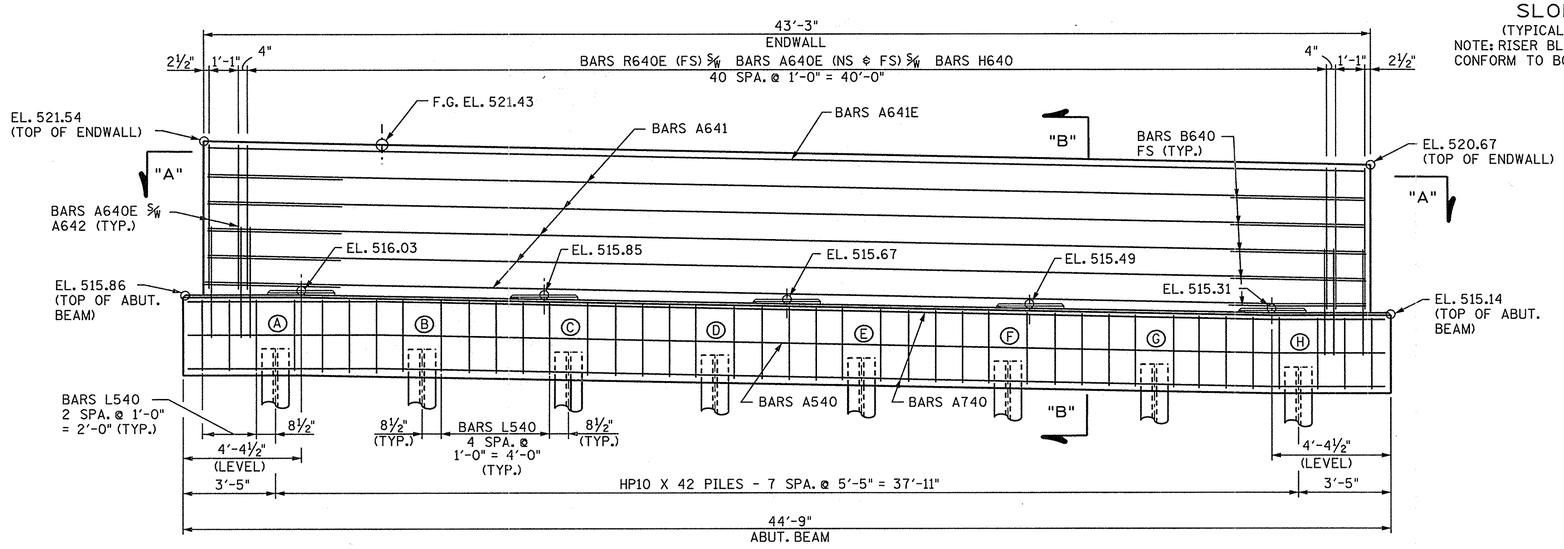

ELEVATION

(LOOKING BACK ON SURVEY)

Ⓐ DENOTES PILE CUTOFF ELEVATIONS, SEE TABLE THIS SHEET.

P.C.O. ELEVATION

Ⓐ	Ⓑ	Ⓒ	Ⓓ	Ⓔ	Ⓕ	Ⓖ	Ⓗ
513.86	513.77	513.66	513.55	513.45	513.34	513.23	513.14

CONST. NO. 36001-3290-14

PROJECT NO.	YEAR	SHEET NO.
NHE-15(108)	2012	

REVISIONS

NO.	DATE	BY	BRIEF DESCRIPTION

ABUTMENT GENERAL NOTES

NOTE: RISER BLOCK SHALL BE POURED MONOLITHICALLY WITH ABUTMENT BEAM.

NOTE: WHEN POURING WINGWALLS, PROVISIONS SHALL BE MADE FOR SETTING REINFORCING STEEL FOR WINGPOSTS & PARAPETS. FOR DETAILS OF WINGPOSTS & PARAPETS, SEE STD. DWG. NO. STD-1-1SS.

NOTE: COST OF BRIDGE RAIL AND POST SHALL BE INCLUDED IN THE UNIT PRICE BID FOR BRIDGE RAIL SYSTEM.

NOTE: ELASTOMERIC PADS SHALL BE IN PLACE A MINIMUM OF ONE DAY BEFORE BEING DISTURBED BY SETTING BEAMS. PLACE RUBBER BONDING CEMENT IN SUCH A WAY THAT VISIBLE CONCRETE SURFACES WILL NOT BE STAINED.

WINGBEAM PILES SHALL BE DRIVEN TO THE PLANS TIP ELEVATION OR REFUSAL.

NOTE: NOT LESS THAN HALF OF THE SLAB IN THE END SPAN SHALL BE POURED PRIOR TO, OR CONCURRENTLY WITH, PLACEMENT OF ANY PART OF THE ABUTMENT BACKWALL. AT LEAST THE TOP 12 INCHES OF THE BACKWALL SHALL BE POURED CONCURRENTLY WITH THE END OF SLAB.

ESTIMATED QUANTITIES

CLASS 'A' CONCRETE (BRIDGES) C.Y.	STEEL BAR REINFORCEMENT (BRIDGES) LBS.	EPOXY COATED REINFORCING STEEL LBS.
52	5,683	1,636

BRIDGE NO. 1

STATE OF TENNESSEE
DEPARTMENT OF TRANSPORTATION

ABUTMENT NO. 1
(LEFT LANE)
STATE ROUTE 15
OVER
SMITH FORK CREEK
STATION 591+50.00
LOG MILE 17.87
HARDIN COUNTY
2012

KATHLEEN D. McLAUGHLIN — STATE OF TENNESSEE — No. 108884

6/28/12

CORRECT Wayne L. Seger
ENGINEER OF STRUCTURES

U-52-100

DESIGNED BY D. SHIKE	DATE 09-10
DRAWN BY Q. BONDS	DATE 08-11
SUPERVISED BY MBC/KDM	DATE 08-11
CHECKED BY D. SHIKE	DATE 01-12

D:\New Folder\DGN\ABT\ABT1020.DGN
13-JAN-2012
10:41

ABT1020.DGN

CONST. NO. 36001-3290-14		
PROJECT NO.	YEAR	SHEET NO.
NHE-15(108)	2012	

REVISIONS

NO.	DATE	BY	BRIEF DESCRIPTION

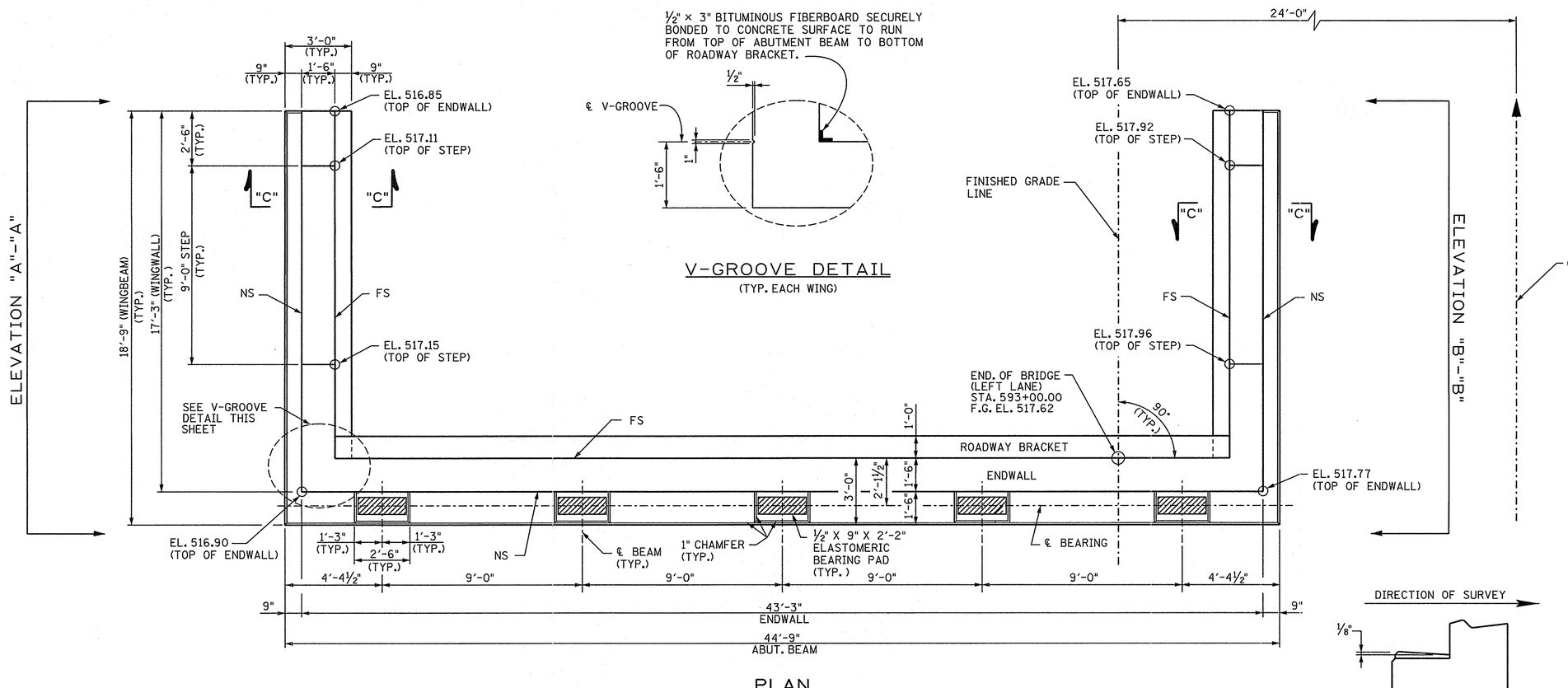

PLAN

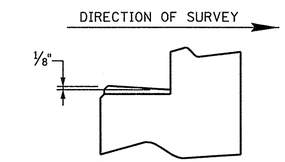

RISER BLOCK SLOPE DETAIL

(TYPICAL EACH RISER BLOCK)

NOTE: RISER BLOCK BEARING SURFACE TO CONFORM TO BOTTOM OF BEAM GRADE.

ABUTMENT GENERAL NOTES

NOTE: RISER BLOCK SHALL BE POURED MONOLITHICALLY WITH ABUTMENT BEAM.

NOTE: WHEN POURING WINGWALLS, PROVISIONS SHALL BE MADE FOR SETTING REINFORCING STEEL FOR WINGPOSTS & PARAPETS. FOR DETAILS OF WINGPOSTS & PARAPETS, SEE STD. DWG. NO. STD-1-1SS.

NOTE: COST OF BRIDGE RAIL AND POST SHALL BE INCLUDED IN THE UNIT PRICE BID FOR BRIDGE RAIL SYSTEM.

NOTE: ELASTOMERIC PADS SHALL BE IN PLACE A MINIMUM OF ONE DAY BEFORE BEING DISTURBED BY SETTING BEAMS. PLACE RUBBER BONDING CEMENT IN SUCH A WAY THAT VISIBLE CONCRETE SURFACES WILL NOT BE STAINED.

WINGBEAM PILES SHALL BE DRIVEN TO THE PLANS TIP ELEVATION OR REFUSAL.

NOTE: NOT LESS THAN HALF OF THE SLAB IN THE END SPAN SHALL BE POURED PRIOR TO, OR CONCURRENTLY WITH, PLACEMENT OF ANY PART OF THE ABUTMENT BACKWALL. AT LEAST THE TOP 12 INCHES OF THE BACKWALL SHALL BE POURED CONCURRENTLY WITH THE END OF SLAB.

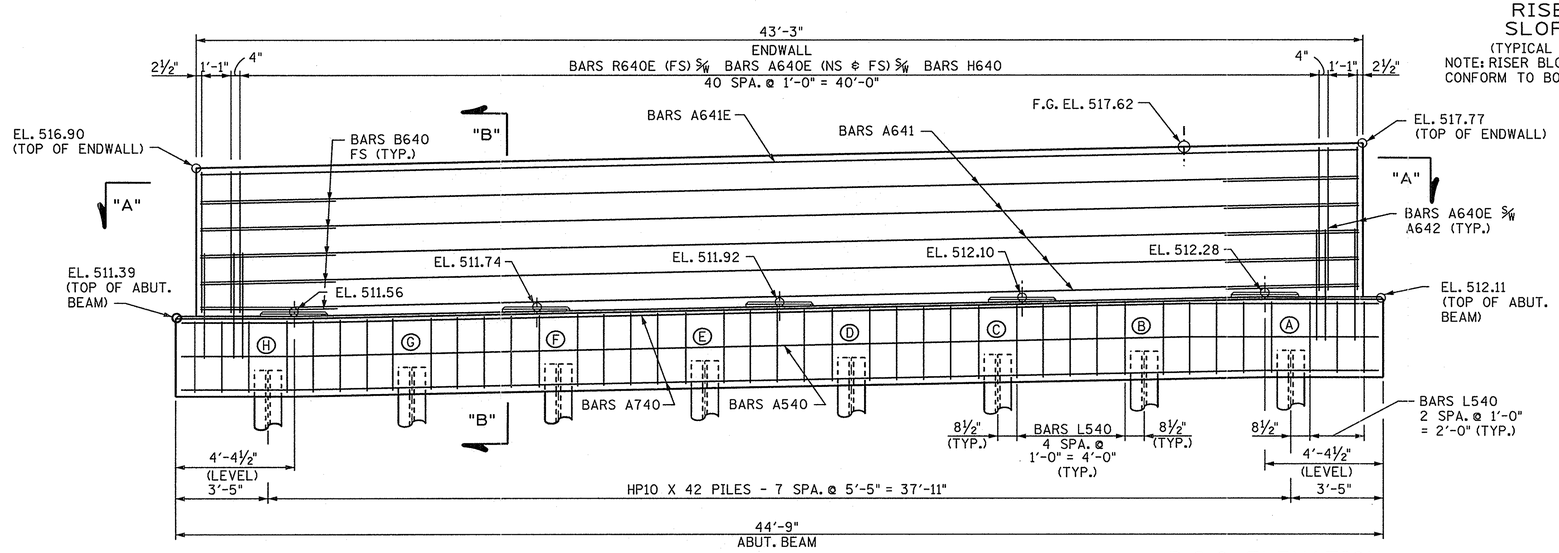

Ⓐ DENOTES PILE CUTOFF ELEVATIONS. SEE TABLE THIS SHEET.

ELEVATION

(LOOKING FORWARD ON SURVEY)

P.C.O. ELEVATION

Ⓐ	Ⓑ	Ⓒ	Ⓓ	Ⓔ	Ⓕ	Ⓖ	Ⓗ
510.11	510.02	509.91	509.80	509.70	509.59	509.48	509.39

ESTIMATED QUANTITIES

CLASS 'A' CONCRETE (BRIDGES) C.Y.	STEEL BAR REINFORCEMENT (BRIDGES) LBS.	EPOXY COATED REINFORCING STEEL LBS.
51	5,683	1,636

BRIDGE NO. 1
STATE OF TENNESSEE
DEPARTMENT OF TRANSPORTATION

ABUTMENT NO. 2
(LEFT LANE)
STATE ROUTE 15
OVER
SMITH FORK CREEK
STATION 591+50.00
LOG MILE 17.87
HARDIN COUNTY
2012

KATHLEEN D. McLAUGHLIN STATE OF TENNESSEE 101 6/20/12

CORRECT Dwayne G. Segers
ENGINEER OF STRUCTURES

DESIGNED BY	D. SHIKE	DATE	09-10
DRAWN BY	Q. BONDS	DATE	08-11
SUPERVISED BY	MBC/KDM	DATE	08-11
CHECKED BY	D. SHIKE	DATE	01-12

DgNpw: Folder=\DGN\ABT\ABT1020.DGN
13-JAN-2012
DHB

U-52-101

ABT1020.DGN

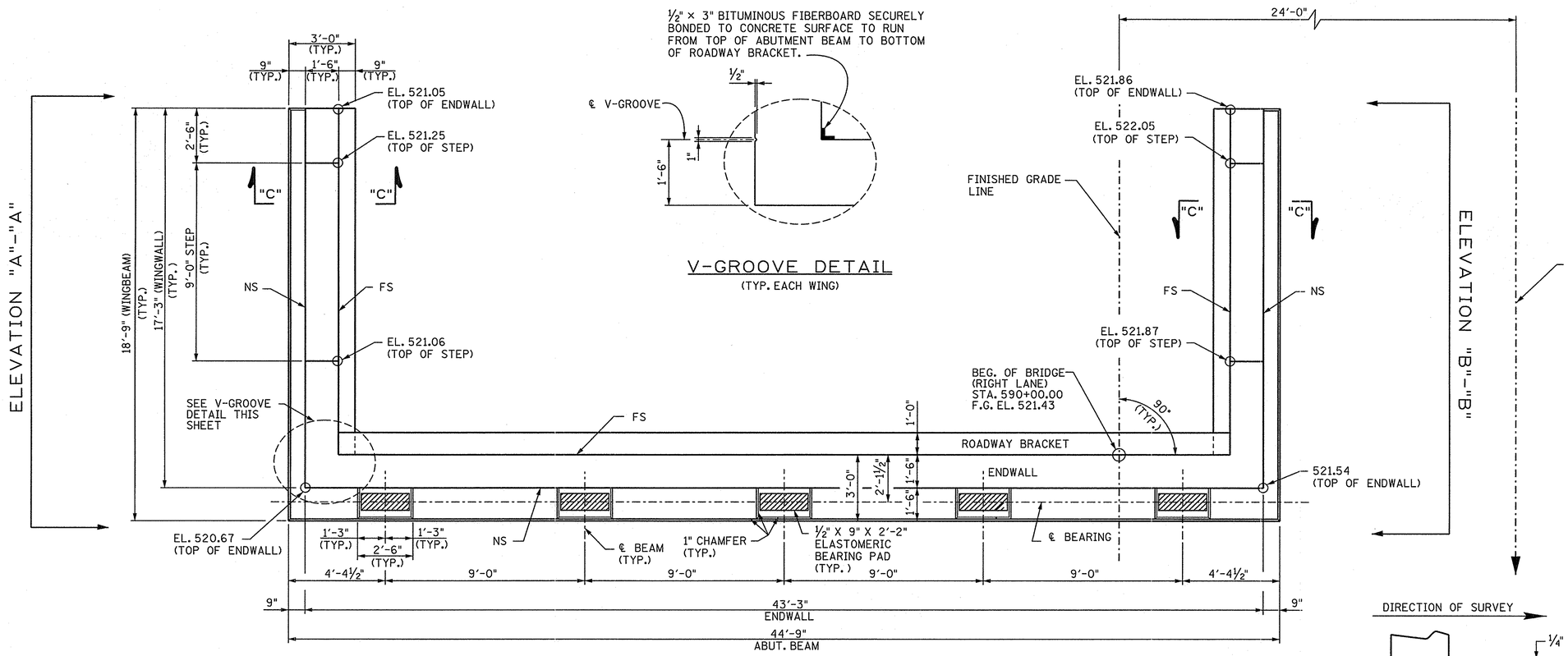

PLAN

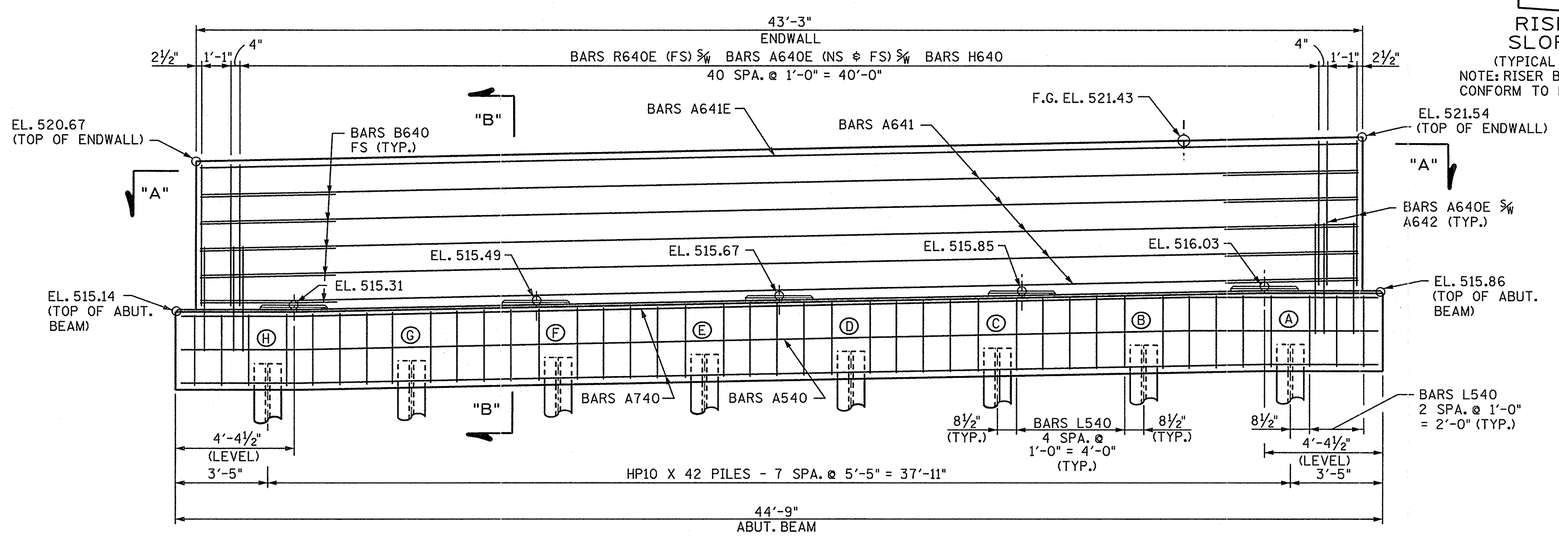

Ⓐ DENOTES PILE CUTOFF ELEVATIONS, SEE TABLE THIS SHEET.

ELEVATION
(LOOKING BACK ON SURVEY)

P.C.O. ELEVATION

Ⓐ	Ⓑ	Ⓒ	Ⓓ	Ⓔ	Ⓕ	Ⓖ	Ⓗ
513.86	513.77	513.66	513.55	513.45	513.34	513.23	513.14

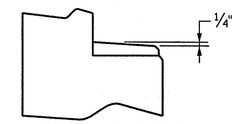

RISER BLOCK SLOPE DETAIL
(TYPICAL EACH RISER BLOCK)
NOTE: RISER BLOCK BEARING SURFACE TO CONFORM TO BOTTOM OF BEAM GRADE.

CONST. NO. 36001-3290-14

PROJECT NO.	YEAR	SHEET NO.
NHE-15(108)	2012	

REVISIONS

NO.	DATE	BY	BRIEF DESCRIPTION

ABUTMENT GENERAL NOTES

NOTE: RISER BLOCK SHALL BE POURED MONOLITHICALLY WITH ABUTMENT BEAM.

NOTE: WHEN POURING WINGWALLS, PROVISIONS SHALL BE MADE FOR SETTING REINFORCING STEEL FOR WINGPOSTS & PARAPETS. FOR DETAILS OF WINGPOSTS & PARAPETS, SEE STD. DWG. NO. STD-1-1SS.

NOTE: COST OF BRIDGE RAIL AND POST SHALL BE INCLUDED IN THE UNIT PRICE BID FOR BRIDGE RAIL SYSTEM.

NOTE: ELASTOMERIC PADS SHALL BE IN PLACE A MINIMUM OF ONE DAY BEFORE BEING DISTURBED BY SETTING BEAMS. PLACE RUBBER BONDING CEMENT IN SUCH A WAY THAT VISIBLE CONCRETE SURFACES WILL NOT BE STAINED.

WINGBEAM PILES SHALL BE DRIVEN TO THE PLANS TIP ELEVATION OR REFUSAL.

NOTE: NOT LESS THAN HALF OF THE SLAB IN THE END SPAN SHALL BE POURED PRIOR TO, OR CONCURRENTLY WITH, PLACEMENT OF ANY PART OF THE ABUTMENT BACKWALL. AT LEAST THE TOP 12 INCHES OF THE BACKWALL SHALL BE POURED CONCURRENTLY WITH THE END OF SLAB.

ESTIMATED QUANTITIES

CLASS 'A' CONCRETE (BRIDGES) C.Y.	STEEL BAR REINFORCEMENT (BRIDGES) LBS.	EPOXY COATED REINFORCING STEEL LBS.
52	5,683	1,636

BRIDGE NO. 1
STATE OF TENNESSEE
DEPARTMENT OF TRANSPORTATION

ABUTMENT NO. 1
(RIGHT LANE)
STATE ROUTE 15
OVER
SMITH FORK CREEK
STATION 591+50.00
LOG MILE 17.87
HARDIN COUNTY
2012

KATHLEEN D. McLAUGHLIN — STATE OF TENNESSEE — 101884 — 6/20/12

CORRECT Wayne G. Sieger
ENGINEER OF STRUCTURES

DESIGNED BY D. SHIKE DATE 09-10
DRAWN BY Q. BONDS DATE 08-11
SUPERVISED BY MBC/KDM DATE 08-11
CHECKED BY D. SHIKE DATE 01-12

U-52-102

D:\New Folder\DGN\ABT\ABT1020.DGN
13-JAN-2012
10:18

ABT1020.DGN

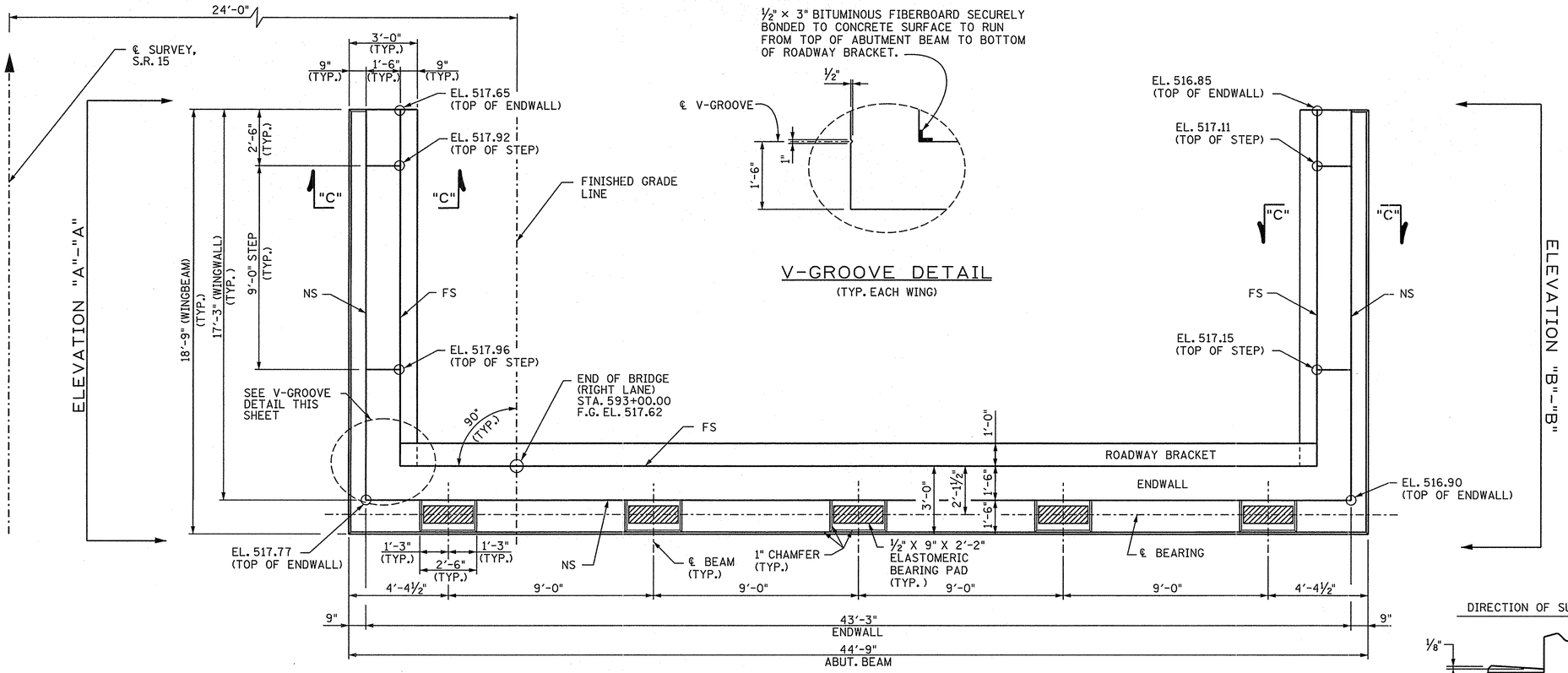

PLAN

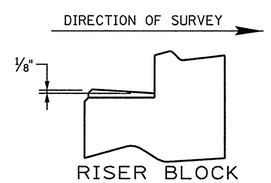

RISER BLOCK SLOPE DETAIL
(TYPICAL EACH RISER BLOCK)
NOTE: RISER BLOCK BEARING SURFACE TO CONFORM TO BOTTOM OF BEAM GRADE.

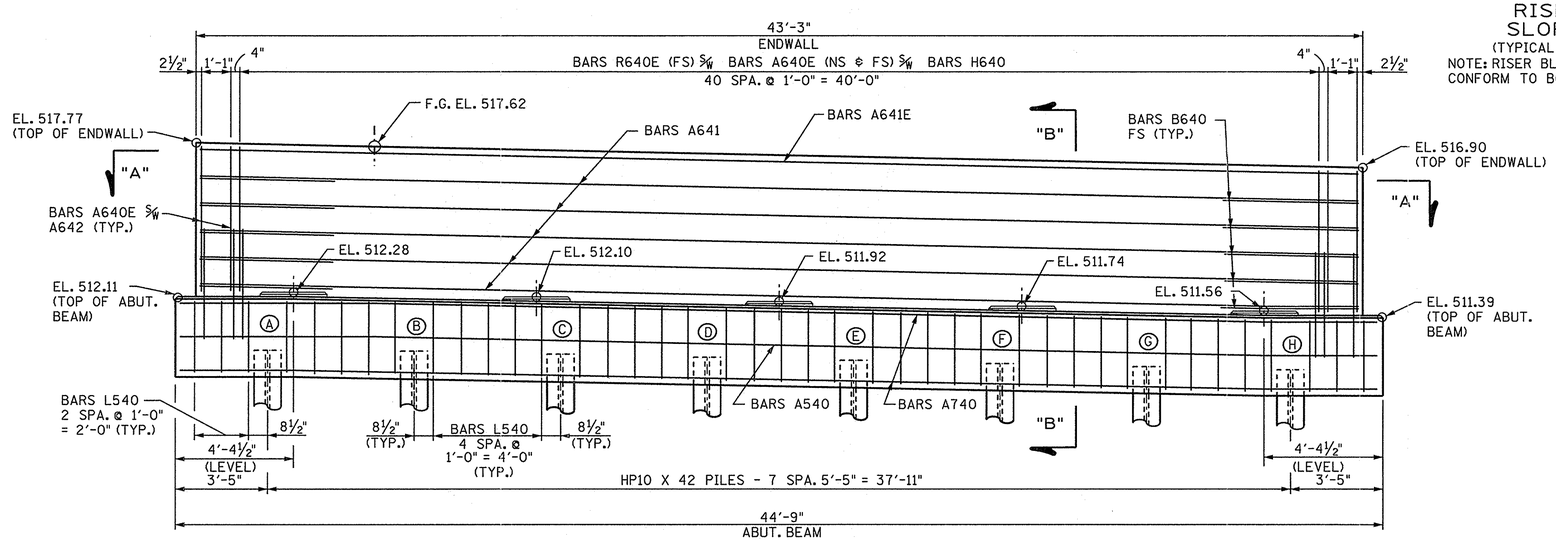

Ⓐ DENOTES PILE CUTOFF ELEVATIONS, SEE TABLE THIS SHEET.

ELEVATION
(LOOKING FORWARD ON SURVEY)

P.C.O. ELEVATION

Ⓐ	Ⓑ	Ⓒ	Ⓓ	Ⓔ	Ⓕ	Ⓖ	Ⓗ
510.11	510.02	509.91	509.80	509.70	509.59	509.48	509.39

CONST. NO. 36001-3290-14

PROJECT NO.	YEAR	SHEET NO.
NHE-15(108)	2012	

REVISIONS

NO.	DATE	BY	BRIEF DESCRIPTION

ABUTMENT GENERAL NOTES

NOTE: RISER BLOCK SHALL BE POURED MONOLITHICALLY WITH ABUTMENT BEAM.

NOTE: WHEN POURING WINGWALLS, PROVISIONS SHALL BE MADE FOR SETTING REINFORCING STEEL FOR WINGPOSTS & PARAPETS. FOR DETAILS OF WINGPOSTS & PARAPETS, SEE STD. DWG. NO. STD-1-1SS.

NOTE: COST OF BRIDGE RAIL AND POST SHALL BE INCLUDED IN THE UNIT PRICE BID FOR BRIDGE RAIL SYSTEM.

NOTE: ELASTOMERIC PADS SHALL BE IN PLACE A MINIMUM OF ONE DAY BEFORE BEING DISTURBED BY SETTING BEAMS. PLACE RUBBER BONDING CEMENT IN SUCH A WAY THAT VISIBLE CONCRETE SURFACES WILL NOT BE STAINED.

WINGBEAM PILES SHALL BE DRIVEN TO THE PLANS TIP ELEVATION OR REFUSAL.

NOTE: NOT LESS THAN HALF OF THE SLAB IN THE END SPAN SHALL BE POURED PRIOR TO, OR CONCURRENTLY WITH, PLACEMENT OF ANY PART OF THE ABUTMENT BACKWALL. AT LEAST THE TOP 12 INCHES OF THE BACKWALL SHALL BE POURED CONCURRENTLY WITH THE END OF SLAB.

ESTIMATED QUANTITIES

CLASS 'A' CONCRETE (BRIDGES) C.Y.	STEEL BAR REINFORCEMENT (BRIDGES) LBS.	EPOXY COATED REINFORCING STEEL LBS.
51	5,683	1,636

BRIDGE NO. 1
STATE OF TENNESSEE
DEPARTMENT OF TRANSPORTATION

ABUTMENT NO. 2
(RIGHT LANE)
STATE ROUTE 15
OVER
SMITH FORK CREEK
STATION 591+50.00
LOG MILE 17.87
HARDIN COUNTY
2012

KATHLEEN D. McLAUGHLIN STATE OF TENNESSEE 6/20/12

CORRECT Wayne G. Sieper
ENGINEER OF STRUCTURES

DESIGNED BY	D. SHIKE	DATE	09-10
DRAWN BY	Q. BONDS	DATE	08-11
SUPERVISED BY	MBC/KDM	DATE	08-11
CHECKED BY	D. SHIKE	DATE	01-12

D:\New Folder\DGN\ABT\ABT1020.DGN
13-JAN-2012
10:19

U-52-103

ABT1020.DGN

CONST. NO.	36001-3290-14	
PROJECT NO.	YEAR	SHEET NO.
NHE-15(108)	2012	

REVISIONS

NO.	DATE	BY	BRIEF DESCRIPTION

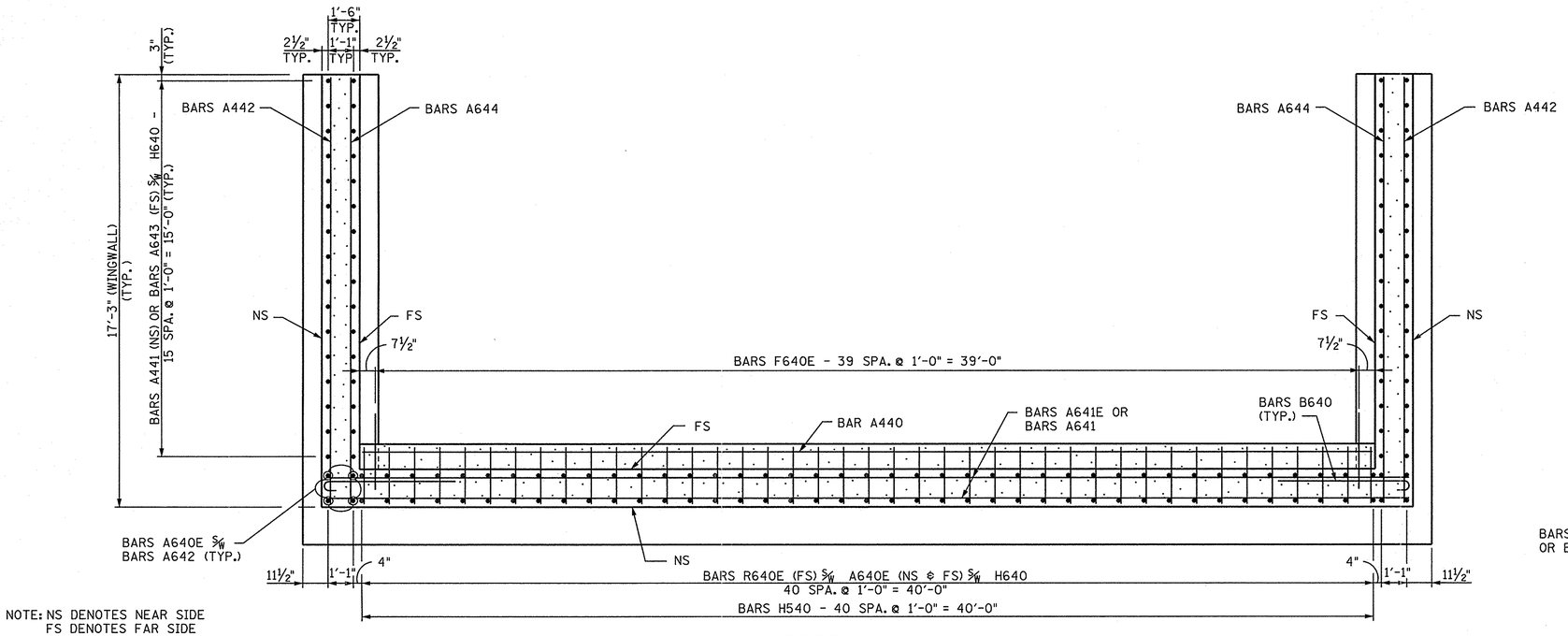

NOTE: NS DENOTES NEAR SIDE
FS DENOTES FAR SIDE

SECTION "A"-"A"

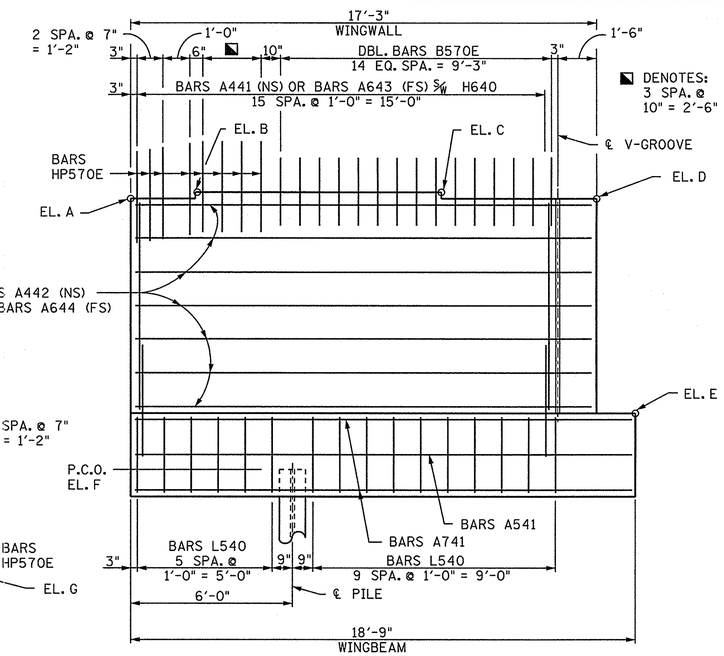

ELEVATION "A"-"A"

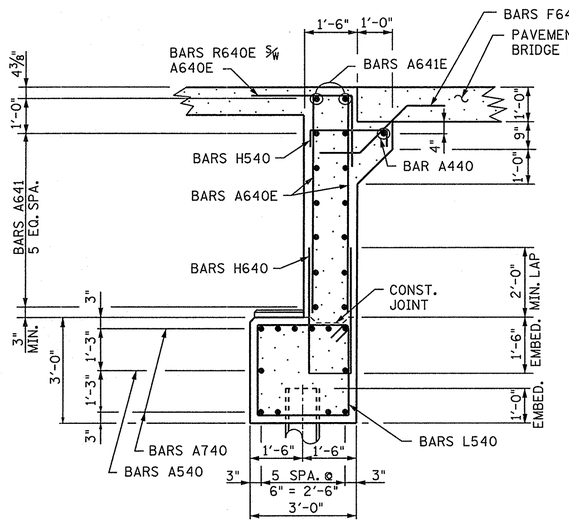

SECTION "B"-"B"

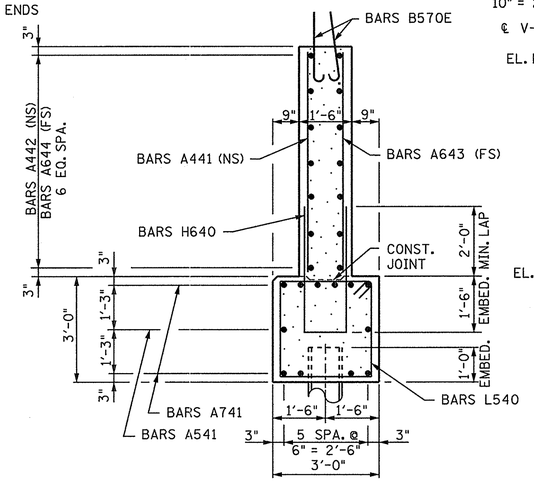

SECTION "C"-"C"

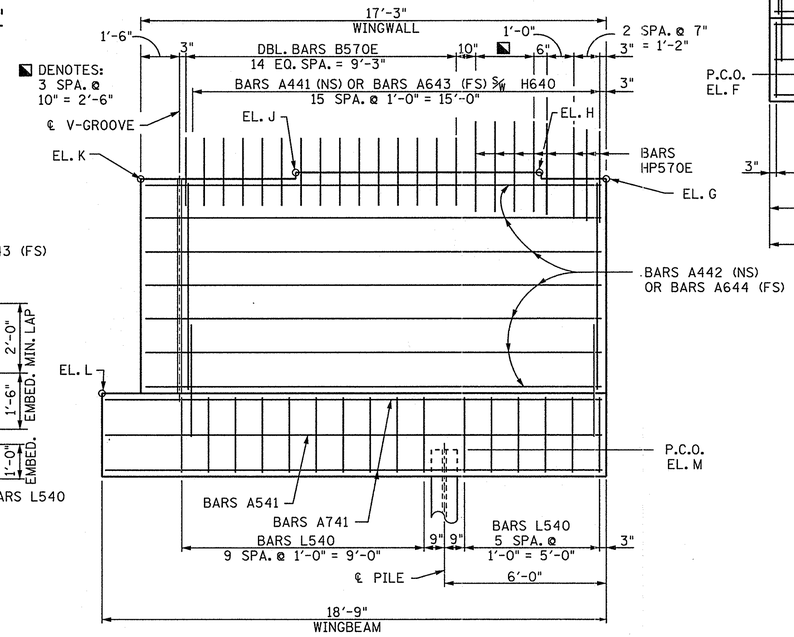

ELEVATION "B"-"B"

ELEVATIONS @ WINGWALLS

ABUT. NO. 1	A	B	C	D	E	F	G	H	J	K	L	M
LEFT LANE	521.86	522.05	521.87	521.54	515.86	513.86	521.05	521.25	521.06	520.67	515.14	513.14
RIGHT LANE	521.05	521.25	521.06	520.67	515.14	513.14	521.86	522.05	521.87	521.54	515.86	513.86
ABUT. NO. 2	A	B	C	D	E	F	G	H	J	K	L	M
LEFT LANE	516.85	517.11	517.15	516.90	511.39	509.39	517.65	517.92	517.96	517.77	512.11	510.11
RIGHT LANE	517.65	517.92	517.96	517.77	512.11	510.11	516.85	517.11	517.15	516.90	511.39	509.39

DESIGNED BY D. SHIKE DATE 09-10
DRAWN BY O. BONDS DATE 08-11
SUPERVISED BY MBC/KDM DATE 08-11
CHECKED BY D. SHIKE DATE 01-12

BRIDGE NO. 1
STATE OF TENNESSEE
DEPARTMENT OF TRANSPORTATION

ABUTMENTS NO. 1 & NO. 2 DETAILS
(LEFT & RIGHT LANES)
STATE ROUTE 15
OVER
SMITH FORK CREEK
STATION 591+50.00
LOG MILE 17.87
HARDIN COUNTY
2012

KATHLEEN D. McLAUGHLIN Registered Engineer No. 101152 STATE OF TENNESSEE
6/28/12

CORRECT Wayne Y. Segel
ENGINEER OF STRUCTURES

U-52-104

D:\New Folder\DGN\ABT\ABT1020.DGN
13-JAN-2012
10:26

PER1020.DGN

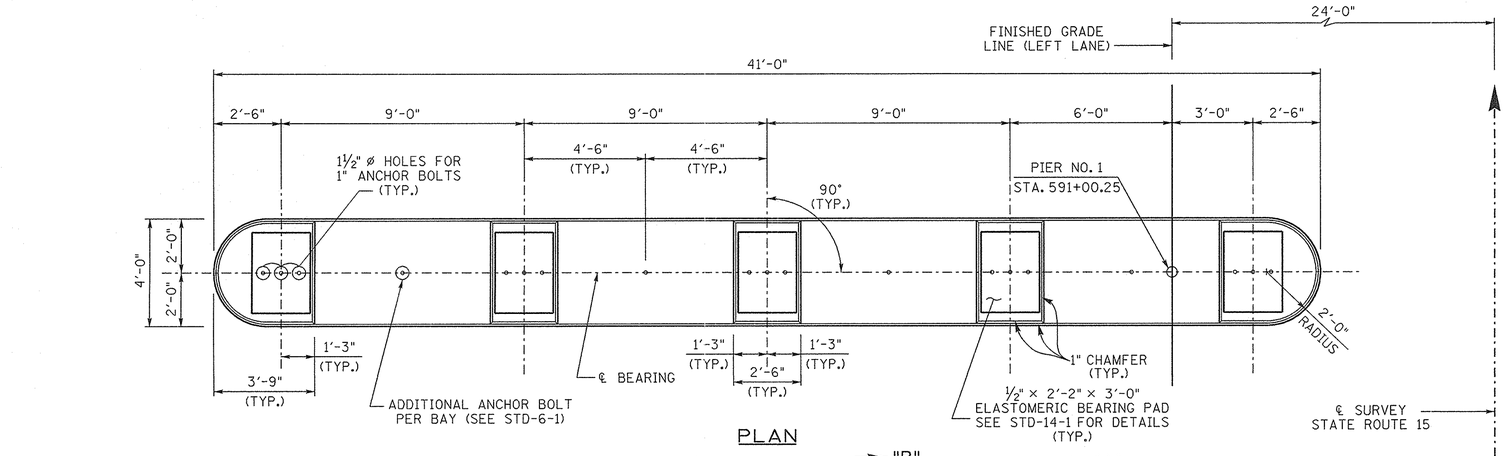

PLAN

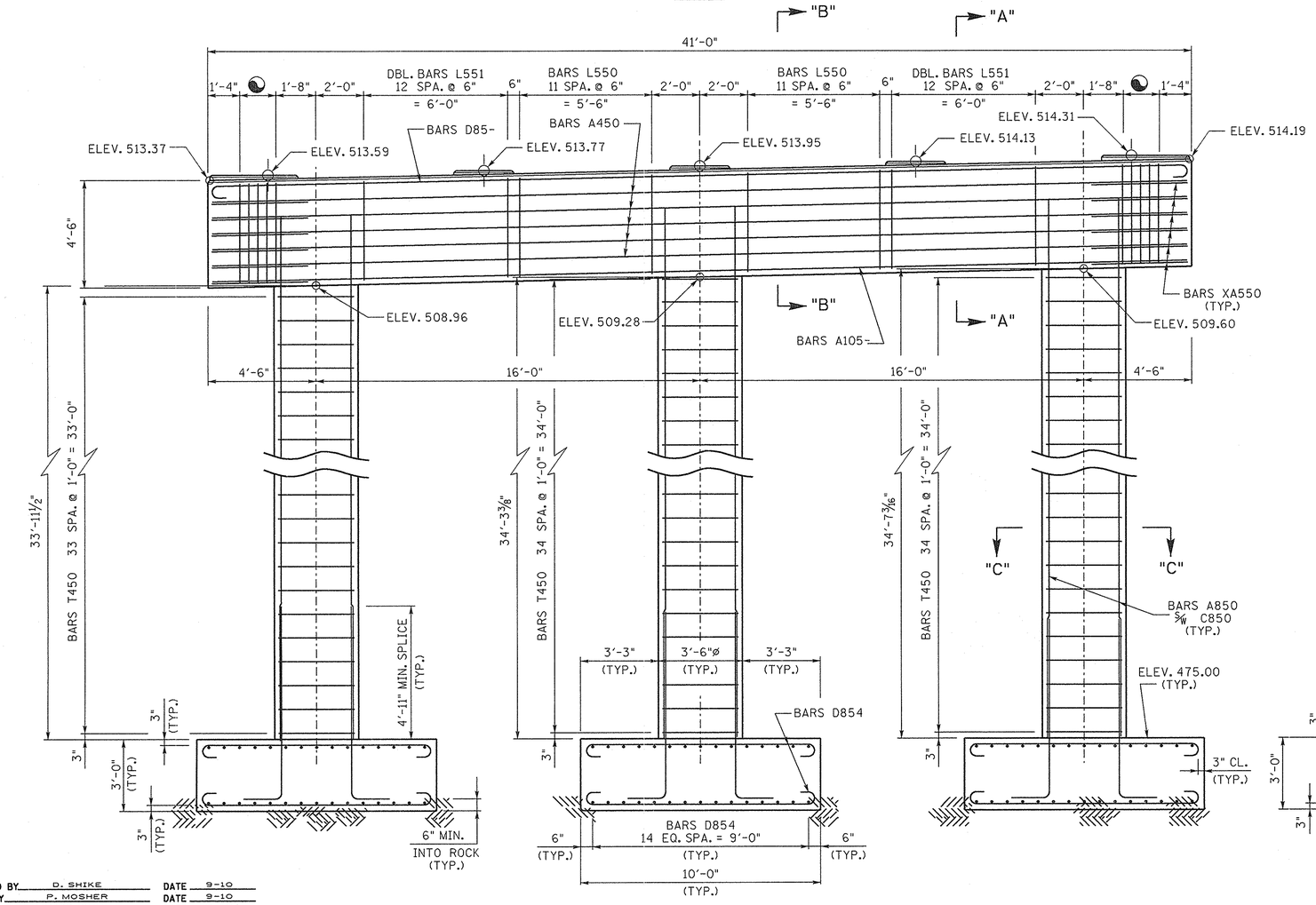

ELEVATION

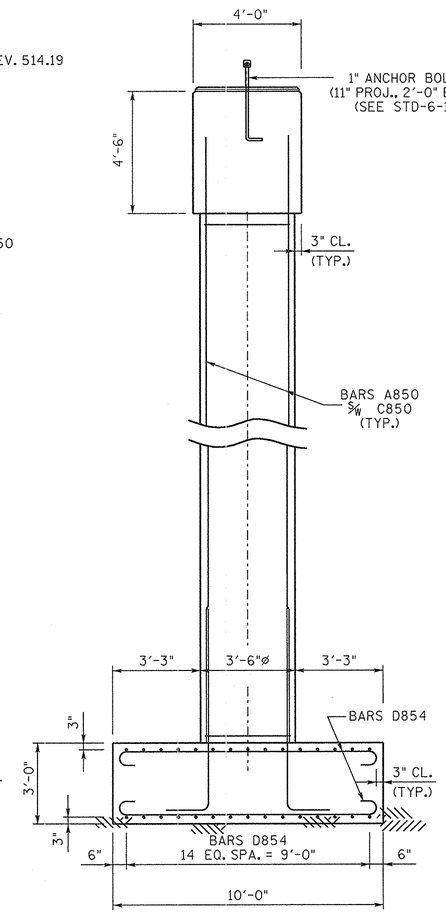

END ELEVATION

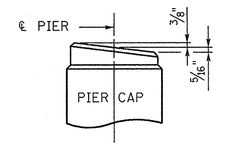

RISER BLOCK SLOPE DETAIL
(PER RISER BLOCK)

CONST. NO. 36001-3290-14

PROJECT NO.	YEAR	SHEET NO.
NHE-15(108)	2012	

REVISIONS

NO.	DATE	BY	BRIEF DESCRIPTION

NOTE: WHEN POURING CAP BEAM, PROVISIONS SHALL BE MADE FOR SETTING ANCHOR BOLTS. SEE STANDARD DRAWING STD-6-1. BOLT PROJECTION = 11".

NOTE: RISER BLOCKS TO BE POURED MONOLITHICALLY WITH CAP BEAM.

NOTE: ELASTOMERIC PADS SHALL BE IN PLACE A MINIMUM OF ONE DAY BEFORE BEING DISTURBED BY SETTING BEAMS ON CONCRETE. PLACE RUBBER BONDING CEMENT IN SUCH A WAY THAT VISIBLE CONCRETE SURFACES WILL NOT BE STAINED.

NOTE: COLUMN STEEL TO EXTEND 2'-11" INTO CAP.

NOTE: RISER BLOCK BEARING PAD SURFACE TO CONFORM TO BOTTOM OF BEAM GRADE.

DENOTES: DBL. BARS L551 4 SPA. @ 4½" = 1'-6"

ESTIMATED QUANTITIES

CLASS "A" CONCRETE (BRIDGES) C.Y.	REINFORCING STEEL (BRIDGES) L.B.
97	20,580

BRIDGE NO. 1

STATE OF TENNESSEE
DEPARTMENT OF TRANSPORTATION

PIER NO. 1
STATE ROUTE 15
(LEFT LANE)
OVER
SMITH FORK CREEK
STATION 591+50.00
LOG MILE 17.87
HARDIN COUNTY
2012

KATHLEEN D. McLAUGHLIN — STATE OF TENNESSEE — 1/20/12

CORRECT Wayne A. Seger
ENGINEER OF STRUCTURES

DESIGNED BY	D. SHIKE	DATE	9-10
DRAWN BY	P. MOSHER	DATE	9-10
SUPERVISED BY	MBC/KDM	DATE	9-10
CHECKED BY	DJS	DATE	1-12

D:\pmmsgn\PER\PER1020.dgn
01-JAN-2012
09:19

U-52-105

PER1020.DGN

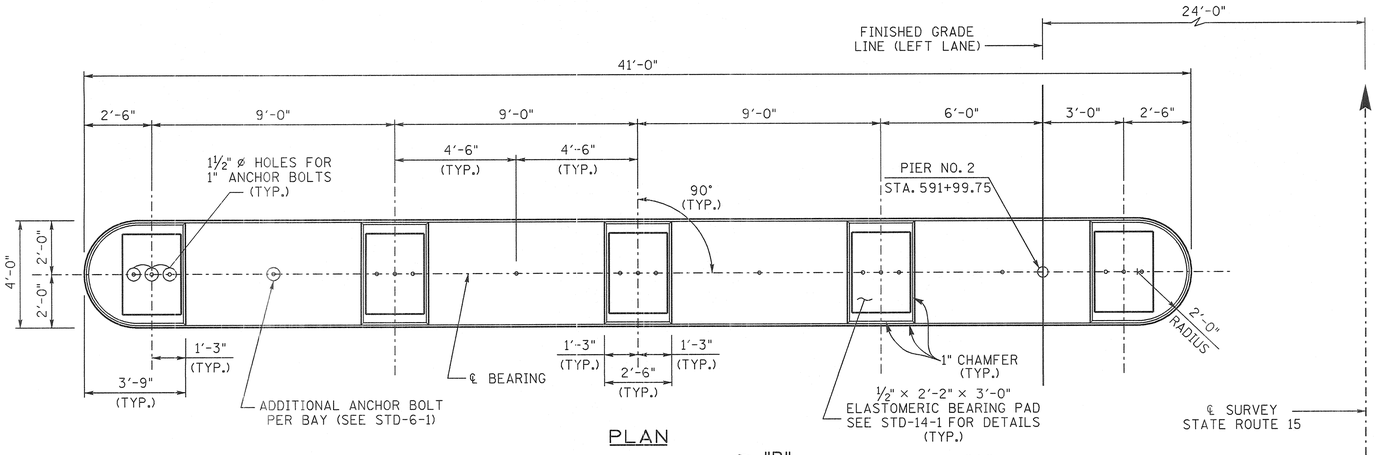

PLAN

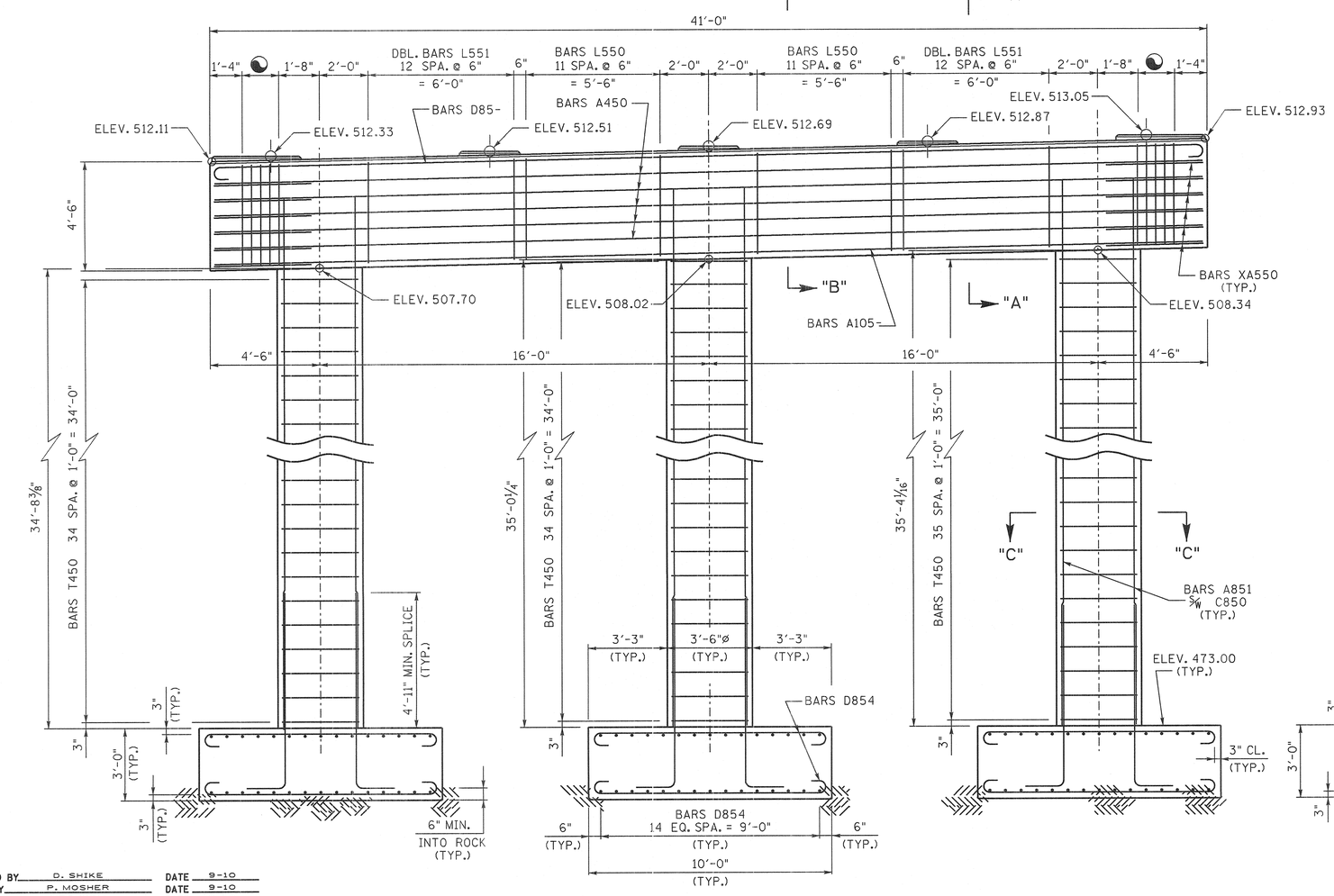

ELEVATION

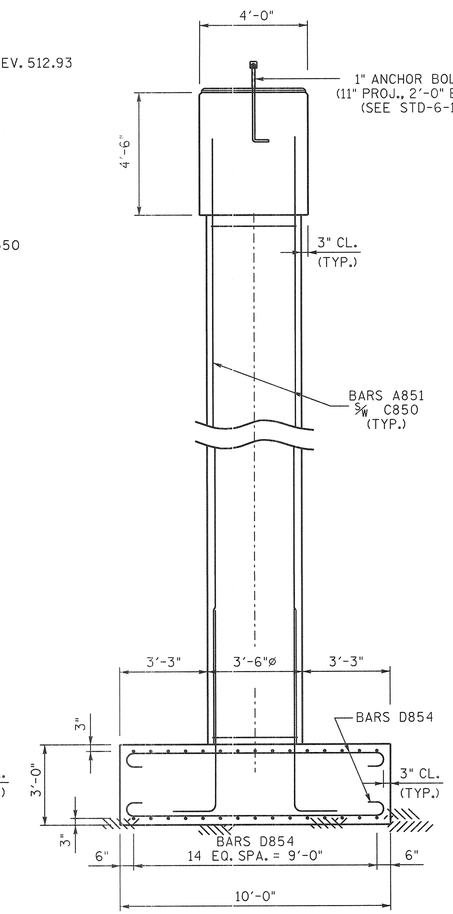

END ELEVATION

DENOTES: DBL. BARS L551 4 SPA. @ 4½" = 1'-6"

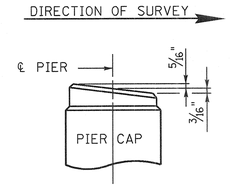

RISER BLOCK SLOPE DETAIL
(PER RISER BLOCK)

CONST. NO.	36001-3290-14	
PROJECT NO.	YEAR	SHEET NO.
NHE-15(108)	2012	

REVISIONS

NO.	DATE	BY	BRIEF DESCRIPTION

NOTE: WHEN POURING CAP BEAM, PROVISIONS SHALL BE MADE FOR SETTING ANCHOR BOLTS. SEE STANDARD DRAWING STD-6-1. BOLT PROJECTION = 11".

NOTE: RISER BLOCKS TO BE POURED MONOLITHICALLY WITH CAP BEAM.

NOTE: ELASTOMERIC PADS SHALL BE IN PLACE A MINIMUM OF ONE DAY BEFORE BEING DISTURBED BY SETTING BEAMS ON CONCRETE. PLACE RUBBER BONDING CEMENT IN SUCH A WAY THAT VISIBLE CONCRETE SURFACES WILL NOT BE STAINED.

NOTE: COLUMN STEEL TO EXTEND 2'-11" INTO CAP.

NOTE: RISER BLOCK BEARING PAD SURFACE TO CONFORM TO BOTTOM OF BEAM GRADE.

ESTIMATED QUANTITIES

CLASS "A" CONCRETE (BRIDGES) C.Y.	REINFORCING STEEL (BRIDGES) L.B.
98	20,762

BRIDGE NO. 1
STATE OF TENNESSEE
DEPARTMENT OF TRANSPORTATION

PIER NO. 2
STATE ROUTE 15
(LEFT LANE)
OVER
SMITH FORK CREEK
STATION 591+50.00
LOG MILE 17.87
HARDIN COUNTY
2012

KATHLEEN D. McLAUGHLIN — STATE OF TENNESSEE — No. 101831 — 14 — REGISTERED PROFESSIONAL ENGINEER
6/25/12

CORRECT Wayne A. Sieper
ENGINEER OF STRUCTURES

U-52-106

DESIGNED BY	D. SHIKE	DATE	9-10
DRAWN BY	P. MOSHER	DATE	9-10
SUPERVISED BY	MBC/KDM	DATE	9-10
CHECKED BY	DJS	DATE	1-12

D:\pmmsgn\PER\PER1020.dgn
17-JAN-2012
09:20

PER1020.DGN

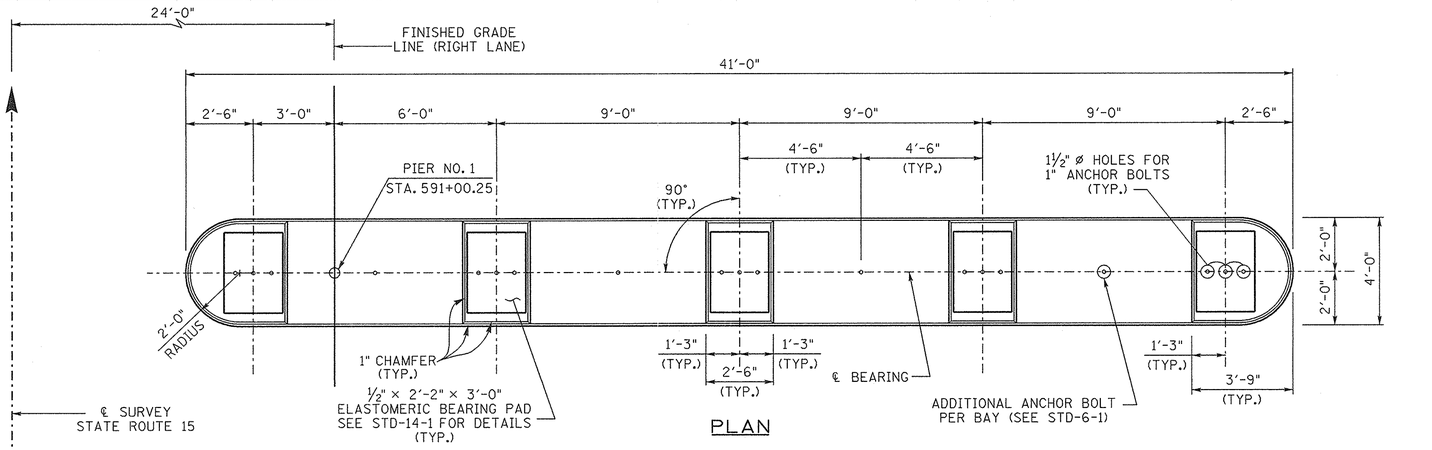

PLAN

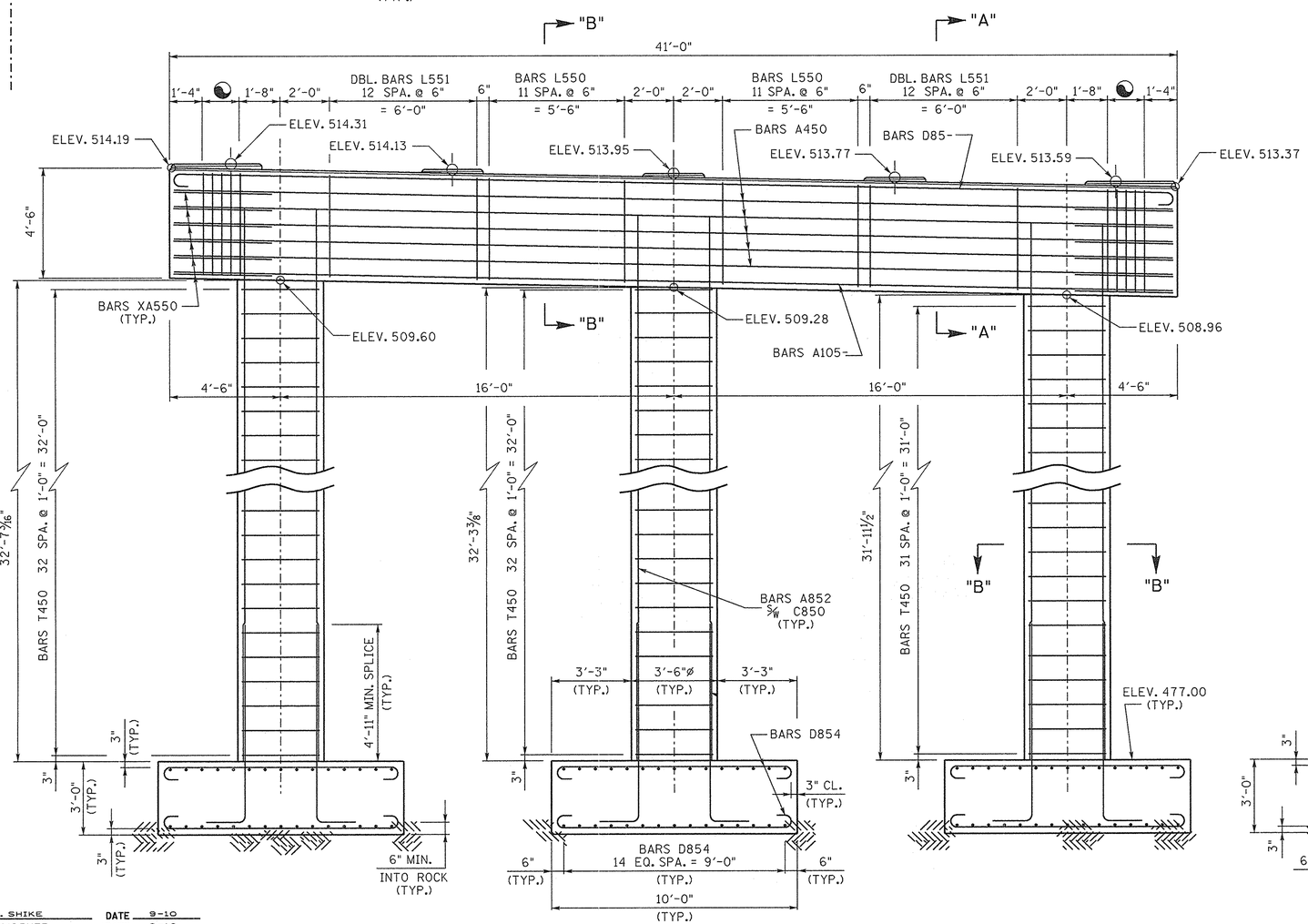

ELEVATION

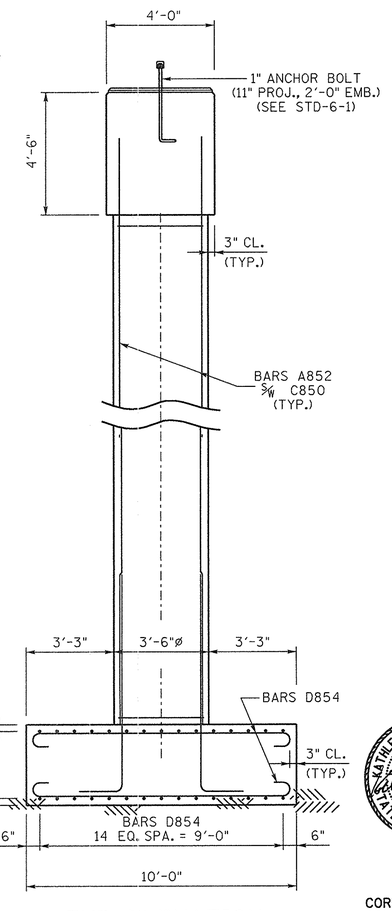

END ELEVATION

DENOTES: DBL. BARS L551 4 SPA. @ 4½" = 1'-6"

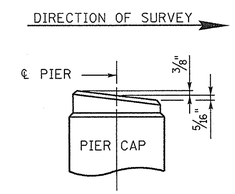

RISER BLOCK SLOPE DETAIL
(PER RISER BLOCK)

CONST. NO.	36001-3290-14	
PROJECT NO.	YEAR	SHEET NO.
NHE-15(108)	2012	

REVISIONS

NO.	DATE	BY	BRIEF DESCRIPTION

NOTE: WHEN POURING CAP BEAM, PROVISIONS SHALL BE MADE FOR SETTING ANCHOR BOLTS. SEE STANDARD DRAWING STD-6-1. BOLT PROJECTION = 11".

NOTE: RISER BLOCKS TO BE POURED MONOLITHICALLY WITH CAP BEAM.

NOTE: ELASTOMERIC PADS SHALL BE IN PLACE A MINIMUM OF ONE DAY BEFORE BEING DISTURBED BY SETTING BEAMS ON CONCRETE. PLACE RUBBER BONDING CEMENT IN SUCH A WAY THAT VISIBLE CONCRETE SURFACES WILL NOT BE STAINED.

NOTE: COLUMN STEEL TO EXTEND 2'-11" INTO CAP.

NOTE: RISER BLOCK BEARING PAD SURFACE TO CONFORM TO BOTTOM OF BEAM GRADE.

ESTIMATED QUANTITIES

CLASS "A" CONCRETE (BRIDGES) C.Y.	REINFORCING STEEL (BRIDGES) L.B.
95	20,088

BRIDGE NO. 1

STATE OF TENNESSEE
DEPARTMENT OF TRANSPORTATION

PIER NO. 1
STATE ROUTE 15
(RIGHT LANE)
OVER
SMITH FORK CREEK
STATION 591+50.00
LOG MILE 17.87
HARDIN COUNTY
2012

KATHLEEN D. McLAUGHLIN REGISTERED ENGINEER 24 AGRICULTURE TENNESSEE 6/28/12 STATE OF TENNESSEE

CORRECT Wayne J. Seger
ENGINEER OF STRUCTURES

DESIGNED BY	D. SHIKE	DATE	9-10
DRAWN BY	P. MOSHER	DATE	9-10
SUPERVISED BY	MBC/KDM	DATE	9-10
CHECKED BY	DJS	DATE	1-12

D:\prmsgn\PER\PER1020.dgn
01-JUN-2012
09:20

U-52-107

PER1020.DGN

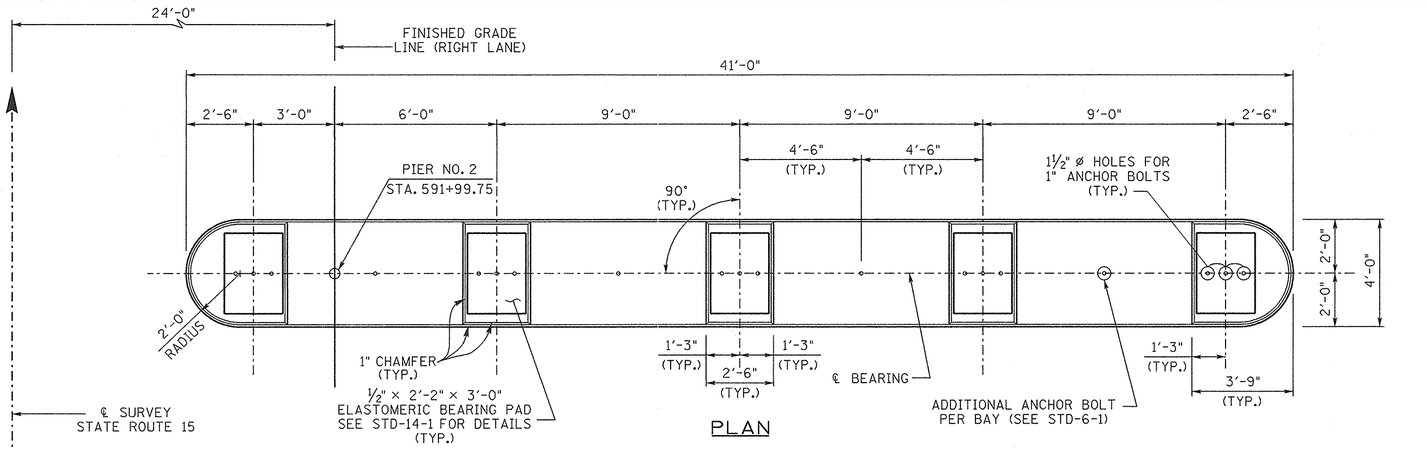

PLAN

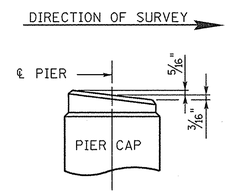

RISER BLOCK SLOPE DETAIL
(PER RISER BLOCK)

CONST. NO.	36001-3290-14	
PROJECT NO.	YEAR	SHEET NO.
NHE-15(108)	2012	

REVISIONS

NO.	DATE	BY	BRIEF DESCRIPTION

NOTE: WHEN POURING CAP BEAM, PROVISIONS SHALL BE MADE FOR SETTING ANCHOR BOLTS. SEE STANDARD DRAWING STD-6-1. BOLT PROJECTION = 11".

NOTE: RISER BLOCKS TO BE POURED MONOLITHICALLY WITH CAP BEAM.

NOTE: ELASTOMERIC PADS SHALL BE IN PLACE A MINIMUM OF ONE DAY BEFORE BEING DISTURBED BY SETTING BEAMS ON CONCRETE. PLACE RUBBER BONDING CEMENT IN SUCH A WAY THAT VISIBLE CONCRETE SURFACES WILL NOT BE STAINED.

NOTE: COLUMN STEEL TO EXTEND 2'-11" INTO CAP.

NOTE: RISER BLOCK BEARING PAD SURFACE TO CONFORM TO BOTTOM OF BEAM GRADE.

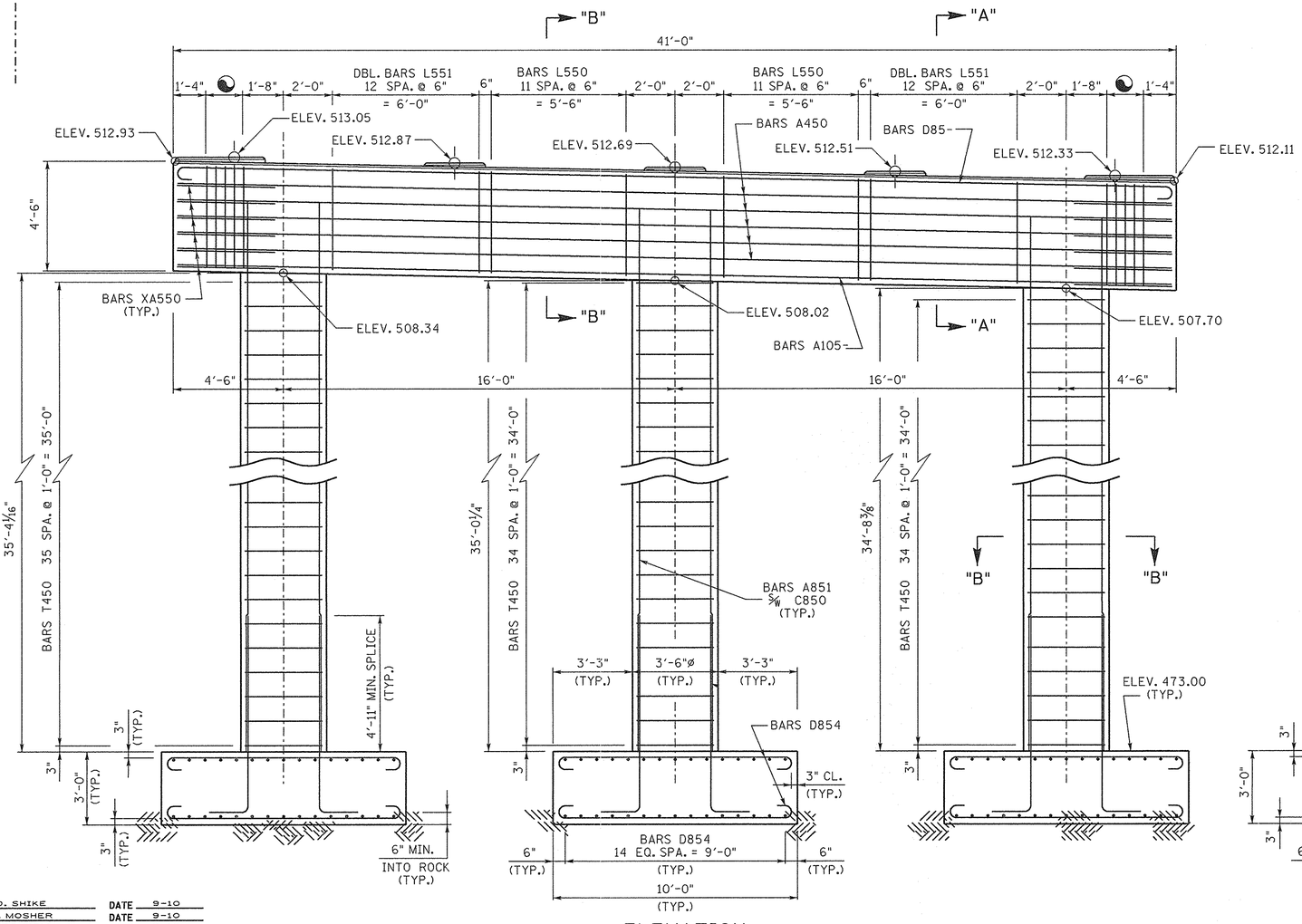

ELEVATION

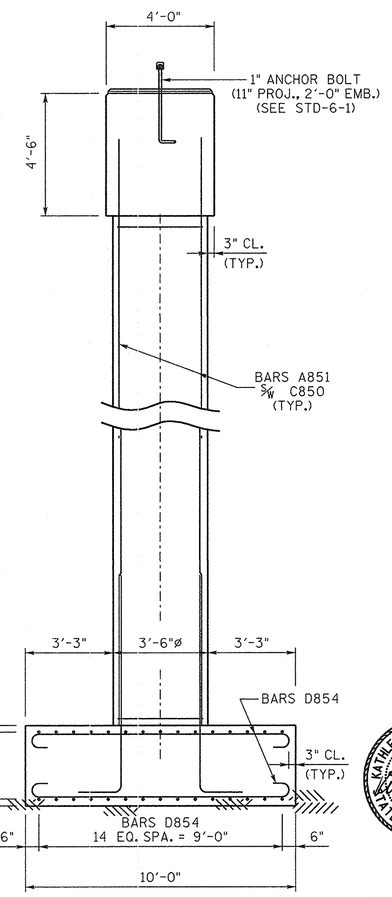

END ELEVATION

DENOTES: DBL. BARS L551 4 SPA. @ 4½" = 1'-6"

ESTIMATED QUANTITIES	
CLASS "A" CONCRETE (BRIDGES) C.Y.	REINFORCING STEEL (BRIDGES) L.B.
98	20,762

BRIDGE NO. 1

STATE OF TENNESSEE
DEPARTMENT OF TRANSPORTATION

PIER NO. 2
STATE ROUTE 15
(RIGHT LANE)
OVER
SMITH FORK CREEK
STATION 591+50.00
LOG MILE 17.87
HARDIN COUNTY
2012

KATHLEEN D. MCLAUGHLIN REGISTERED ENGINEER No. 101551 STATE OF TENNESSEE
6/28/12

CORRECT Wayne J. Seger
ENGINEER OF STRUCTURES

DESIGNED BY	D. SHIKE	DATE	9-10
DRAWN BY	P. MOSHER	DATE	9-10
SUPERVISED BY	MBC/KDM	DATE	9-10
CHECKED BY	DJS	DATE	1-12

D:\pmmsgn\PER\PER1020.dgn
12-JUN-2012
09:20

U-52-108

PER1020.DGN

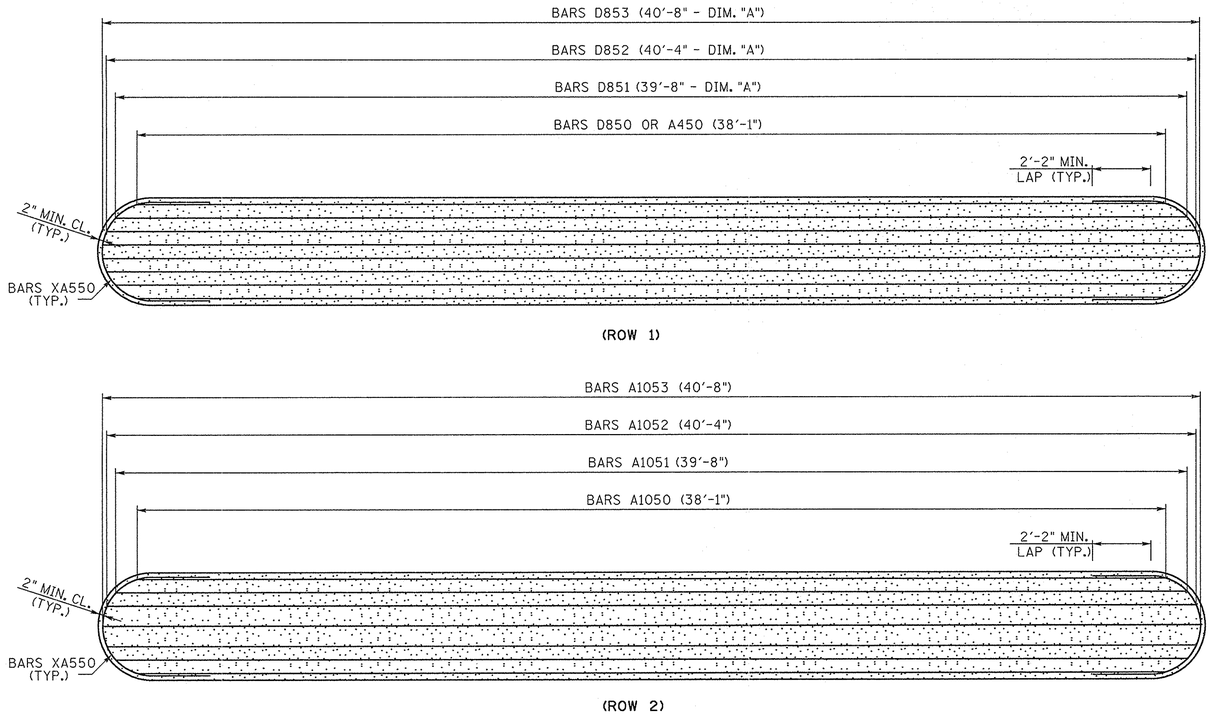

PLAN OF MAIN REINFORCEMENT

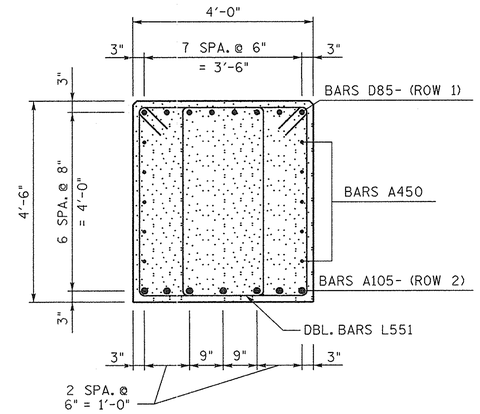

SECTION "A"-"A"

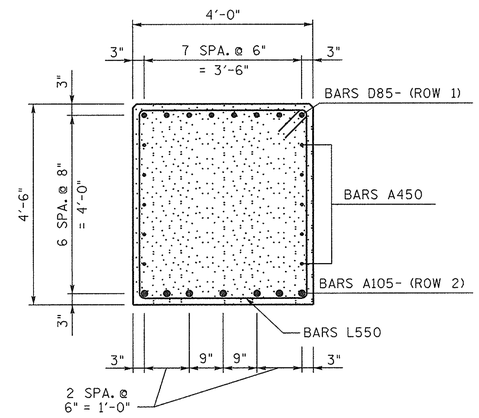

SECTION "B"-"B"

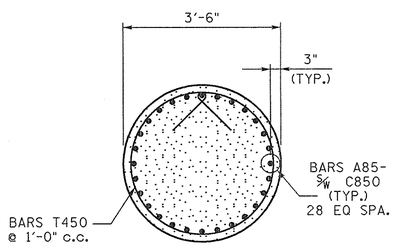

SECTION "C"-"C"

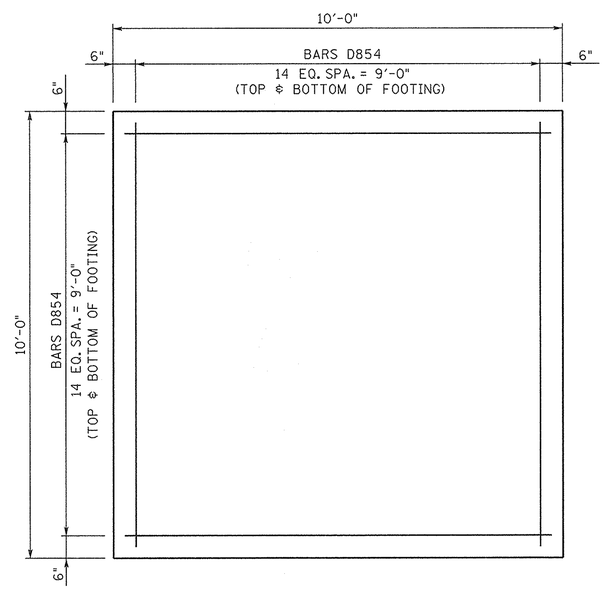

FOOTING DETAIL
(10'-0" × 10'-0" × 3'-0")

CONST. NO. 36001-3290-14

PROJECT NO.	YEAR	SHEET NO.
NHE-15(108)	2012	

REVISIONS

NO.	DATE	BY	BRIEF DESCRIPTION

BRIDGE NO. 1

STATE OF TENNESSEE
DEPARTMENT OF TRANSPORTATION

PIER NOS. 1 & 2 DETAILS
STATE ROUTE 15
(LEFT & RIGHT LANES)
OVER
SMITH FORK CREEK
STATION 591+50.00
LOG MILE 17.87
HARDIN COUNTY
2012

KATHLEEN D. McLAUGHLIN REGISTERED ENGINEER NO. 101551 STATE OF TENNESSEE 6/20/12

CORRECT Wayne G. Segar
ENGINEER OF STRUCTURES

DESIGNED BY	D. SHIKE	DATE	9-10
DRAWN BY	P. MOSHER	DATE	9-10
SUPERVISED BY	MBC/KDM	DATE	9-10
CHECKED BY	DJS	DATE	1-12

U-52-109

D:\pwworking\PER\PER1020.dgn
01-12-2012
09:20

FFD1020.DGN

CONST. NO. 36001-3290-14

PROJECT NO.	YEAR	SHEET NO.
NHE-15(108)	2012	

REVISIONS

NO.	DATE	BY	BRIEF DESCRIPTION

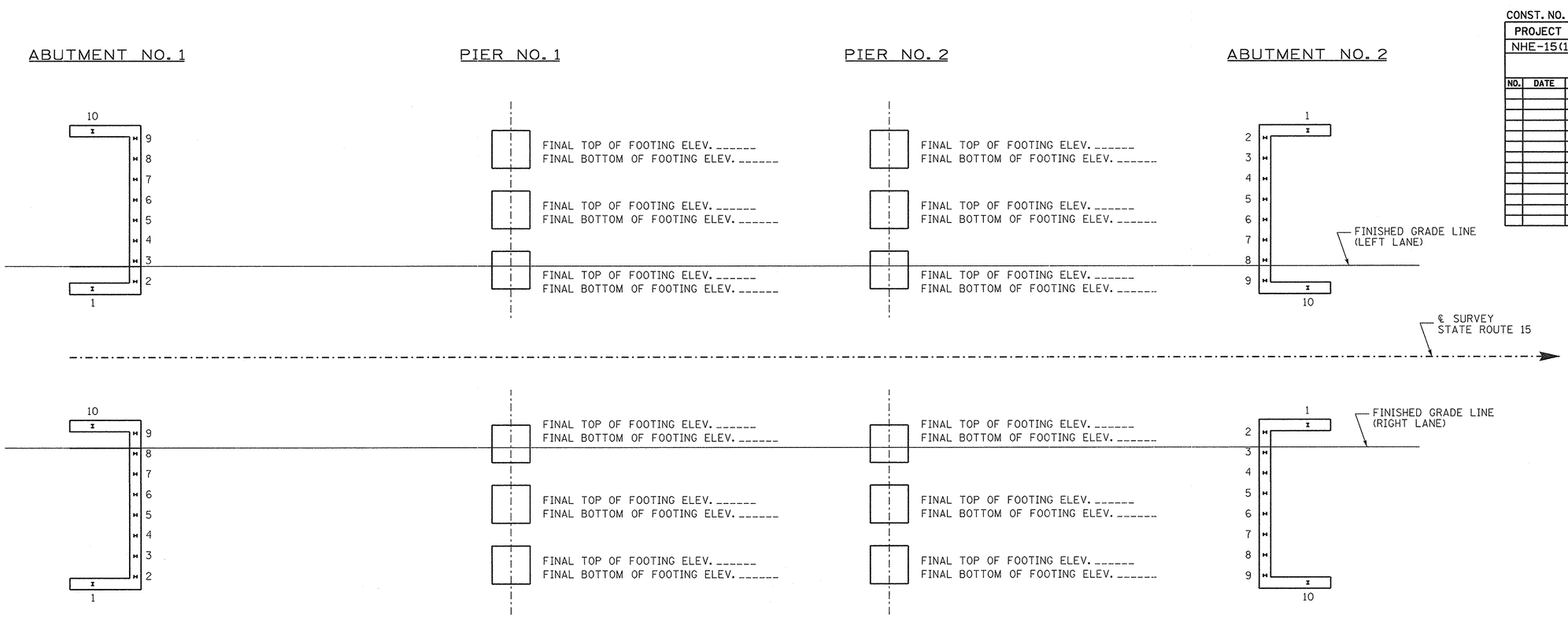

			1	2	3	4	5	6	7	8	9	10
LEFT LANE	ABUTMENT NO. 1	PILE CUT-OFF ELEV.										
		PILE TIP ELEV.										
		IN PLACE PILE LENGTH										
	ABUTMENT NO. 2	PILE CUT-OFF ELEV.										
		PILE TIP ELEV.										
		IN PLACE PILE LENGTH										
RIGHT LANE	ABUTMENT NO. 1	PILE CUT-OFF ELEV.										
		PILE TIP ELEV.										
		IN PLACE PILE LENGTH										
	ABUTMENT NO. 2	PILE CUT-OFF ELEV.										
		PILE TIP ELEV.										
		IN PLACE PILE LENGTH										

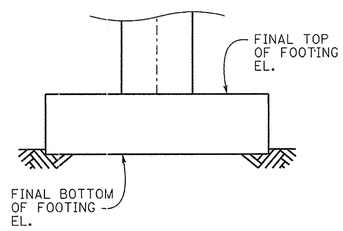

FOOTING DETAIL

(TYP. @ PIER NO. 1 & 2 EACH FOOTING UNLESS OTHERWISE NOTED)

BRIDGE NO. 1

STATE OF TENNESSEE
DEPARTMENT OF TRANSPORTATION

FINAL FOUNDATION DATA
STATE ROUTE 15
OVER
SMITH FORK CREEK
STATION 591+50.00
LOG MILE 17.87
HARDIN COUNTY
2012

NOTE TO CONTRACTOR AND CONSTRUCTION OFFICE:
THE BLANKS ON THIS SHEET ARE TO BE FILLED IN BY THE CONSTRUCTION OFFICE AND/OR FIELD ENGINEER GIVING AS BUILT CONDITIONS. AFTER COMPLETION, IT IS TO BE SENT TO THE DIVISION OF STRUCTURES TO BECOME PART OF FINAL BRIDGE DOCUMENTS.

DESIGNED BY D. SHIKE DATE 9-10
DRAWN BY P. MOSHER DATE 9-11
SUPERVISED BY MBC/KDM DATE 9-11
CHECKED BY DJS DATE 1-12

CORRECT Wayne J. Sieger
ENGINEER OF STRUCTURES

U-52-110

D:\pmmsgn\FFD\FFD1020.dgn
12-04-2012
09:21

BILL OF STEEL

SUPERSTRUCTURE

BAR	LOCATION	SIZE	NO. REQ'D	BENDING DIMENSIONS A	B	C	D	LENGTH
A502	DIAPHRAGM	5	24					37'-10"
L400	DIAPHRAGM	4	56	1'-2"	4'-4"			11'-9"
L401	DIAPHRAGM	4	20	1'-2"	1'-2"			5'-5"

SUPERSTRUCTURE EPOXY

BAR	LOCATION	SIZE	NO. REQ'D	BENDING DIMENSIONS A	B	C	D	LENGTH
A500E	SLAB (TOP)	5	90					45'-0"
A501E	SLAB (BOTT.)	5	170					60'-0"
A503E	SLAB (TOP & BOTT.)	5	792					42'-11"
A504E	SLAB (BOTT.)	5	34					13'-0"
A700E	SLAB (TOP)	7	90					25'-6"
A800E	SLAB (TOP)	8	44					31'-4"
A900E	SLAB (TOP)	9	178					60'-0"
B570E	SLAB/PARA.	5	1,804	2'-1"				2'-8"

ABUTMENT NO. 1

BAR	LOCATION	SIZE	NO. REQ'D	BENDING DIMENSIONS A	B	C	D	LENGTH
A440	ROADWAY BRACKET	4	1					39'-11"
A441	WINGWALLS	4	32					5'-4"
A442	WINGWALLS	4	14					16'-11"
A540	ABUTMENT BEAM	5	2					44'-5"
A541	WINGBEAMS	5	4					18'-5"
A641	ENDWALL	6	12					42'-11"
A642	ENDWALL	6	8					3'-8"
A643	WINGWALLS	6	32					5'-4"
A644	WINGWALLS	6	14					16'-11"
A740	ABUTMENT BEAM	7	10					44'-5"
A741	WINGBEAMS	7	20					18'-5"
B640	ENDWALL	6	12	5'-0"				5'-8"
H540	ENDWALL/RDY. BRKT.	5	41	2'-2"	6"			3'-2"
H640	ABUT. BEAM/ENDWALL	6	73	1'-2"	4'-0"			9'-2"
L540	ABUT./WINGBEAMS	5	73	2'-8"	2'-8"			11'-7"

ABUTMENT NO. 1 EPOXY

BAR	LOCATION	SIZE	NO. REQ'D	BENDING DIMENSIONS A	B	C	D	LENGTH
A640E	ENDWALL	6	90					5'-4"
A641E	ENDWALL	6	2					42'-11"
B570E	WINGWALLS	5	60	2'-1"				2'-8"
F640E	ENDWALL/RDY. BKT.	6	40	1'-1"	1'-3"	1'-1"	1'-3"	4'-0"
HP570E	WINGWALLS	5	16	4"	3'-10"	1'-1"		7'-11"
R640E	ENDWALL	6	41	2'-0"	2'-0"			4'-0"

ABUTMENT NO. 2

BAR	LOCATION	SIZE	NO. REQ'D	BENDING DIMENSIONS A	B	C	D	LENGTH
A440	ROADWAY BRACKET	4	1					39'-11"
A441	WINGWALLS	4	32					5'-4"
A442	WINGWALLS	4	14					16'-11"
A540	ABUTMENT BEAM	5	2					44'-5"
A541	WINGBEAMS	5	4					18'-5"
A641	ENDWALL	6	12					42'-11"
A642	ENDWALL	6	8					3'-8"
A643	WINGWALLS	6	32					5'-4"
A644	WINGWALLS	6	14					16'-11"
A740	ABUTMENT BEAM	7	10					44'-5"
A741	WINGBEAMS	7	20					18'-5"
B640	ENDWALL	6	12	5'-0"				5'-8"
H540	ENDWALL/RDY. BRKT.	5	41	2'-2"	6"			3'-2"
H640	ABUT. BEAM/ENDWALL	6	73	1'-2"	4'-0"			9'-2"
L540	ABUT./WINGBEAMS	5	73	2'-8"	2'-8"			11'-7"

ABUTMENT NO. 2 EPOXY

BAR	LOCATION	SIZE	NO. REQ'D	BENDING DIMENSIONS A	B	C	D	LENGTH
A640E	ENDWALL	6	90					5'-4"
A641E	ENDWALL	6	2					42'-11"
B570E	WINGWALLS	5	60	2'-1"				2'-8"
F640E	ENDWALL/RDY. BKT.	6	40	1'-1"	1'-3"	1'-1"	1'-3"	4'-0"
HP570E	WINGWALLS	5	16	4"	3'-10"	1'-1"		7'-11"
R640E	ENDWALL	6	41	2'-0"	2'-0"			4'-0"

PIER NO. 1

BAR	LOCATION	SIZE	NO. REQ'D	BENDING DIMENSIONS A	B	C	D	LENGTH
A450	CAP	4	10					38'-1"
A850	COLUMN/CAP	8	84					36'-11"
A1050	CAP	10	2					38'-1"
A1051	CAP	10	2					39'-8"
A1052	CAP	10	2					40'-4"
A1053	CAP	10	1					40'-8"
C850	FTG./COLUMN	8	84	8'-2"				9'-6"
D850	CAP	8	2	38'-1"				39'-11"
D851	CAP	8	2	39'-8"				41'-6"
D852	CAP	8	2	40'-4"				42'-2"
D853	CAP	8	2	40'-8"				42'-6"
D854	FOOTINGS	8	180	9'-6"				11'-4"
L550	CAP	5	24	3'-8"	4'-2"			16'-7"
L551	CAP	5	72	2'-9"	4'-2"			14'-9"
T450	COLUMNS	4	104	3'-2"				10'-8"
XA550	CAP	5	12	1'-10"	2'-2"			10'-1"

PIER NO. 2

BAR	LOCATION	SIZE	NO. REQ'D	BENDING DIMENSIONS A	B	C	D	LENGTH
A450	CAP	4	10					38'-1"
A851	COLUMN/CAP	8	84					37'-8"
A1050	CAP	10	2					38'-1"
A1051	CAP	10	2					39'-8"
A1052	CAP	10	2					40'-4"
A1053	CAP	10	1					40'-8"
C850	FTG./COLUMN	8	84	8'-2"				9'-6"
D850	CAP	8	2	38'-1"				39'-11"
D851	CAP	8	2	39'-8"				41'-6"
D852	CAP	8	2	40'-4"				42'-2"
D853	CAP	8	2	40'-8"				42'-6"
D854	FOOTINGS	8	180	9'-6"				11'-4"
L550	CAP	5	24	3'-8"	4'-2"			16'-7"
L551	CAP	5	72	2'-9"	4'-2"			14'-9"
T450	COLUMNS	4	106	3'-2"				10'-8"
XA550	CAP	5	12	1'-10"	2'-2"			10'-1"

CONST. NO. 36001-3290-14

PROJECT NO.	YEAR	SHEET NO.
NHE-15(108)	2012	

REVISIONS

NO.	DATE	BY	BRIEF DESCRIPTION

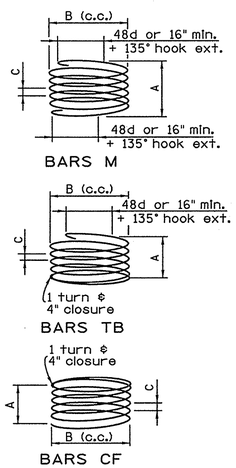

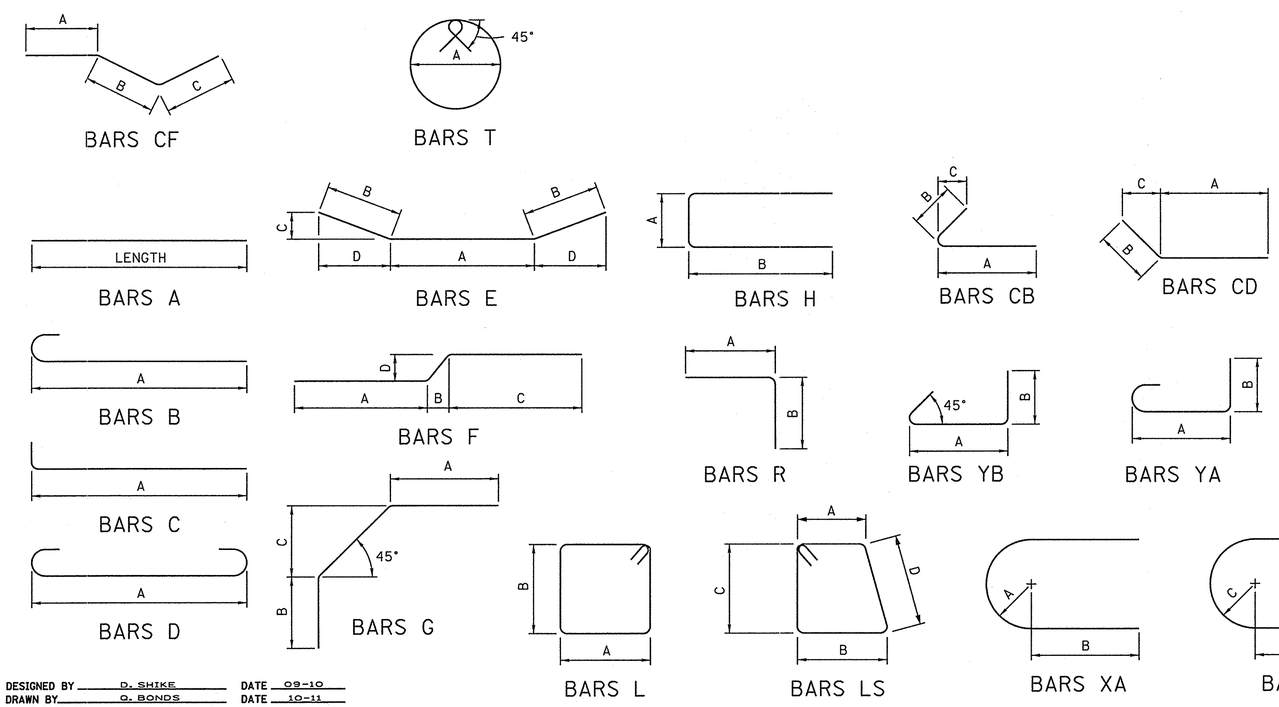

REINFORCING STEEL CODE

TYPE	SIZE	SERIES
A	5	06

NOTE: DIMENSIONS SHOWN ON THIS SHEET ARE OUTSIDE TO OUTSIDE OF BAR. STANDARD C.R.S.I. HOOK DETAILS SHALL APPLY, EXCEPT AS NOTED.

NOTE: THE SUFFIX E FOR BARS SO MARKED DENOTES EPOXY COATED REINFORCEMENT.

BRIDGE NO. 1
STATE OF TENNESSEE
DEPARTMENT OF TRANSPORTATION
BILL OF STEEL
LEFT LANE
STATE ROUTE 15
OVER
SMITH FORK CREEK
STATION 591+50.00
LOG MILE 17.87
HARDIN COUNTY
2012

KATHLEEN D. McLAUGHLIN — STATE OF TENNESSEE — No. 101551 — 6/28/12

CORRECT Wayne G. Seger
ENGINEER OF STRUCTURES

U-52-111

DESIGNED BY	D. SHIKE	DATE	09-10
DRAWN BY	Q. BONDS	DATE	10-11
SUPERVISED BY	KDM/MBC	DATE	10-11
CHECKED BY	D. SHIKE	DATE	01-12

D:\New Folder\DGN\BOS\BOS1020.dgn
24-Jan-2012
10:28

BOS1020.DGN

BILL OF STEEL

SUPERSTRUCTURE

BAR	LOCATION	SIZE	NO. REQ'D	BENDING DIMENSIONS A	B	C	D	LENGTH
A502	DIAPHRAGM	5	24					37'-10"
L400	DIAPHRAGM	4	56	1'-2"	4'-4"			11'-9"
L401	DIAPHRAGM	4	20	1'-2"	1'-2"			5'-5"

SUPERSTRUCTURE EPOXY

BAR	LOCATION	SIZE	NO. REQ'D	A	B	C	D	LENGTH
A500E	SLAB (TOP)	5	90					45'-0"
A501E	SLAB (BOTT.)	5	170					60'-0"
A503E	SLAB (TOP & BOTT.)	5	792					42'-11"
A504E	SLAB (BOTT.)	5	34					13'-0"
A700E	SLAB (TOP)	7	90					25'-6"
A800E	SLAB (TOP)	8	44					31'-4"
A900E	SLAB (TOP)	9	178					60'-0"
B570E	SLAB/PARA.	5	1,804	2'-1"				2'-8"

ABUTMENT NO. 1

BAR	LOCATION	SIZE	NO. REQ'D	BENDING DIMENSIONS A	B	C	D	LENGTH
A440	ROADWAY BRACKET	4	1					39'-11"
A441	WINGWALLS	4	32					5'-4"
A442	WINGWALLS	4	14					16'-11"
A540	ABUTMENT BEAM	5	2					44'-5"
A541	WINGBEAMS	5	4					18'-5"
A641	ENDWALL	6	12					42'-11"
A642	ENDWALL	6	8					3'-8"
A643	WINGWALLS	6	32					5'-4"
A644	WINGWALLS	6	14					16'-11"
A740	ABUTMENT BEAM	7	10					44'-5"
A741	WINGBEAMS	7	20					18'-5"
B640	ENDWALL	6	12	5'-0"				5'-8"
H540	ENDWALL/RDY. BRKT.	5	41	2'-2"	6"			3'-2"
H640	ABUT. BEAM/ENDWALL	6	73	1'-2"	4'-0"			9'-2"
L540	ABUT./WINGBEAMS	5	73	2'-8"	2'-8"			11'-7"

ABUTMENT NO. 1 EPOXY

BAR	LOCATION	SIZE	NO. REQ'D	A	B	C	D	LENGTH
A640E	ENDWALL	6	90					5'-4"
A641E	ENDWALL	6	2					42'-11"
B570E	WINGWALLS	5	60	2'-1"				2'-8"
F640E	ENDWALL/RDY. BKT.	6	40	1'-1"	1'-3"	1'-1"	1'-3"	4'-0"
HP570E	WINGWALLS	5	16	4"	3'-10"	1'-1"		7'-11"
R640E	ENDWALL	6	41	2'-0"	2'-0"			4'-0"

ABUTMENT NO. 2

BAR	LOCATION	SIZE	NO. REQ'D	BENDING DIMENSIONS A	B	C	D	LENGTH
A440	ROADWAY BRACKET	4	1					39'-11"
A441	WINGWALLS	4	32					5'-4"
A442	WINGWALLS	4	14					16'-11"
A540	ABUTMENT BEAM	5	2					44'-5"
A541	WINGBEAMS	5	4					18'-5"
A641	ENDWALL	6	12					42'-11"
A642	ENDWALL	6	8					3'-8"
A643	WINGWALLS	6	32					5'-4"
A644	WINGWALLS	6	14					16'-11"
A740	ABUTMENT BEAM	7	10					44'-5"
A741	WINGBEAMS	7	20					18'-5"
B640	ENDWALL	6	12	5'-0"				5'-8"
H540	ENDWALL/RDY. BRKT.	5	41	2'-2"	6"			3'-2"
H640	ABUT. BEAM/ENDWALL	6	73	1'-2"	4'-0"			9'-2"
L540	ABUT./WINGBEAMS	5	73	2'-8"	2'-8"			11'-7"

ABUTMENT NO. 2 EPOXY

BAR	LOCATION	SIZE	NO. REQ'D	A	B	C	D	LENGTH
A640E	ENDWALL	6	90					5'-4"
A641E	ENDWALL	6	2					42'-11"
B570E	WINGWALLS	5	60	2'-1"				2'-8"
F640E	ENDWALL/RDY. BKT.	6	40	1'-1"	1'-3"	1'-1"	1'-3"	4'-0"
HP570E	WINGWALLS	5	16	4"	3'-10"	1'-1"		7'-11"
R640E	ENDWALL	6	41	2'-0"	2'-0"			4'-0"

PIER NO. 1

BAR	LOCATION	SIZE	NO. REQ'D	BENDING DIMENSIONS A	B	C	D	LENGTH
A450	CAP	4	10					38'-1"
A852	COLUMN/CAP	8	84					34'-11"
A1050	CAP	10	2					38'-1"
A1051	CAP	10	2					39'-8"
A1052	CAP	10	2					40'-4"
A1053	CAP	10	1					40'-8"
C850	FTG./COLUMN	8	84	8'-2"				9'-6"
D850	CAP	8	2	38'-1"				39'-11"
D851	CAP	8	2	39'-8"				41'-6"
D852	CAP	8	2	40'-4"				42'-2"
D853	CAP	8	2	40'-8"				42'-6"
D854	FOOTINGS	8	180	9'-6"				11'-4"
L550	CAP	5	24	3'-8"	4'-2"			16'-7"
L551	CAP	5	72	2'-9"	4'-2"			14'-9"
T450	COLUMNS	4	98	3'-2"				10'-8"
XA550	CAP	5	12	1'-10"	2'-2"			10'-1"

PIER NO. 2

BAR	LOCATION	SIZE	NO. REQ'D	A	B	C	D	LENGTH
A450	CAP	4	10					38'-1"
A851	COLUMN/CAP	8	84					37'-8"
A1050	CAP	10	2					38'-1"
A1051	CAP	10	2					39'-8"
A1052	CAP	10	2					40'-4"
A1053	CAP	10	1					40'-8"
C850	FTG./COLUMN	8	84	8'-2"				9'-6"
D850	CAP	8	2	38'-1"				39'-11"
D851	CAP	8	2	39'-8"				41'-6"
D852	CAP	8	2	40'-4"				42'-2"
D853	CAP	8	2	40'-8"				42'-6"
D854	FOOTINGS	8	180	9'-6"				11'-4"
L550	CAP	5	24	3'-8"	4'-2"			16'-7"
L551	CAP	5	72	2'-9"	4'-2"			14'-9"
T450	COLUMNS	4	106	3'-2"				10'-8"
XA550	CAP	5	12	1'-10"	2'-2"			10'-1"

CONST. NO. 36001-3290-14

PROJECT NO.	YEAR	SHEET NO.
NHE-15(108)	2012	

REVISIONS

NO.	DATE	BY	BRIEF DESCRIPTION

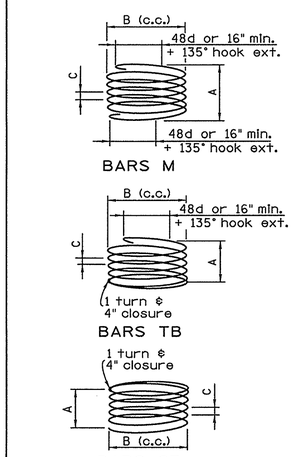

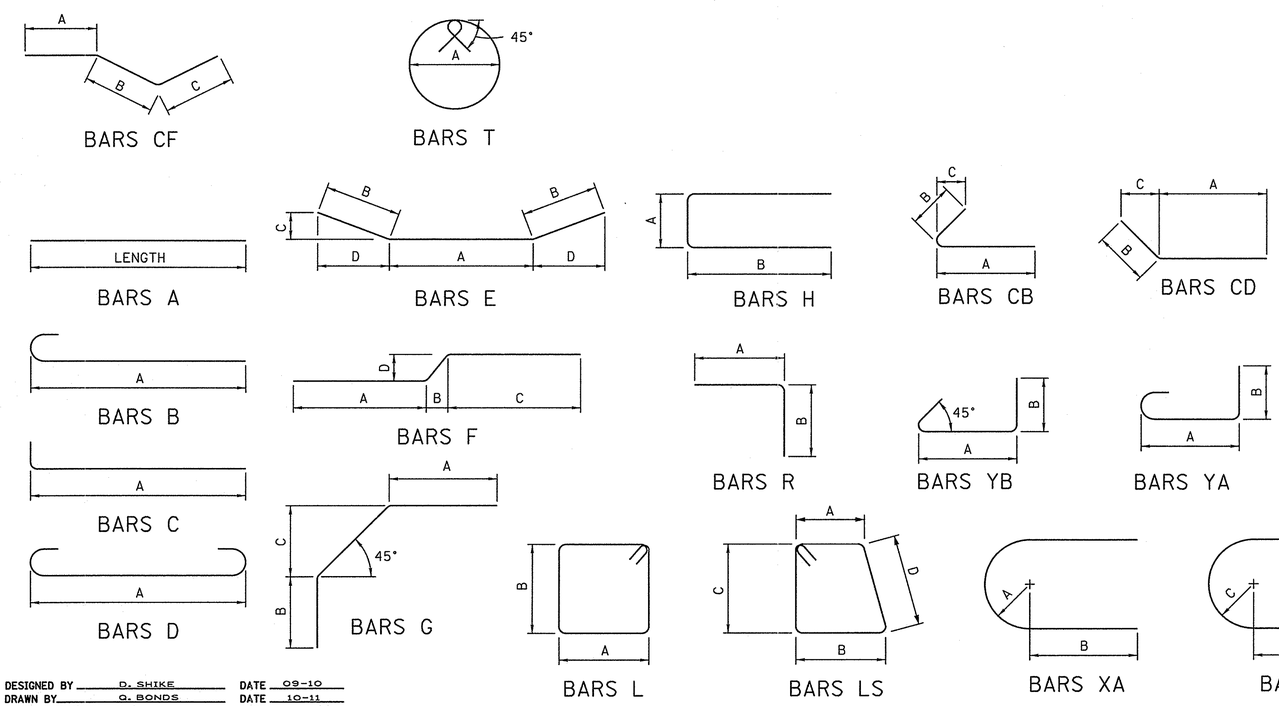

REINFORCING STEEL CODE

TYPE	SIZE	SERIES
A	5	06

NOTE: DIMENSIONS SHOWN ON THIS SHEET ARE OUTSIDE TO OUTSIDE OF BAR. STANDARD C.R.S.I. HOOK DETAILS SHALL APPLY, EXCEPT AS NOTED.

NOTE: THE SUFFIX E FOR BARS SO MARKED DENOTES EPOXY COATED REINFORCEMENT.

BRIDGE NO. 1
STATE OF TENNESSEE
DEPARTMENT OF TRANSPORTATION
BILL OF STEEL
RIGHT LANE
STATE ROUTE 15
OVER
SMITH FORK CREEK
STATION 591+50.00
LOG MILE 17.87
HARDIN COUNTY
2012

KATHLEEN D. McLAUGHLIN REGISTERED ENGINEER No. 101889 STATE OF TENNESSEE
6/28/12

CORRECT Wayne G. Sieger
ENGINEER OF STRUCTURES

U-52-112

DESIGNED BY	D. SHIKE	DATE	09-10
DRAWN BY	Q. BONDS	DATE	10-11
SUPERVISED BY	KDM/MBC	DATE	10-11
CHECKED BY	D. SHIKE	DATE	01-12

\\10019083WF013.rdot.state.tn.us\13SHARED\Structdrop\Drop\1020\BOS1020.dgn
JUN-2012
15:21

LAY1021.DGN

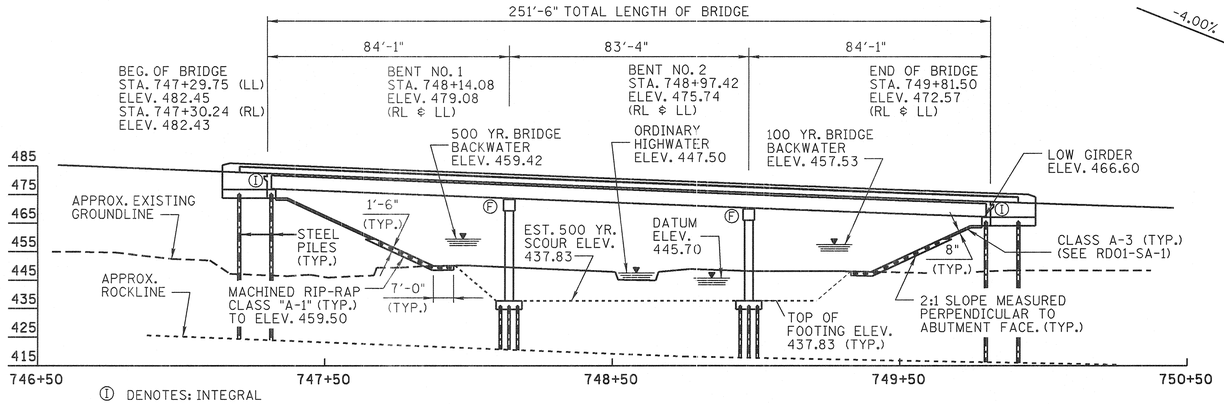

Ⓘ DENOTES: INTEGRAL
Ⓕ DENOTES: FIXED

ELEVATION

(SCALE 1" = 25')

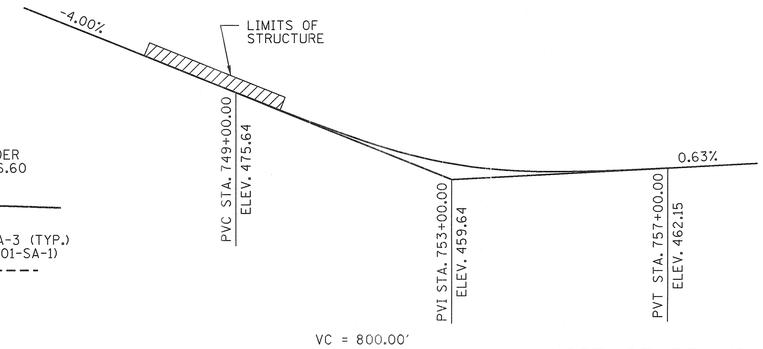

FINISHED GRADE SKETCH

STATE ROUTE 15

CONST. NO. 36001-3290-14

PROJECT NO.	YEAR	SHEET NO.
NHE-15(108)	2012	

REVISIONS

NO.	DATE	BY	BRIEF DESCRIPTION

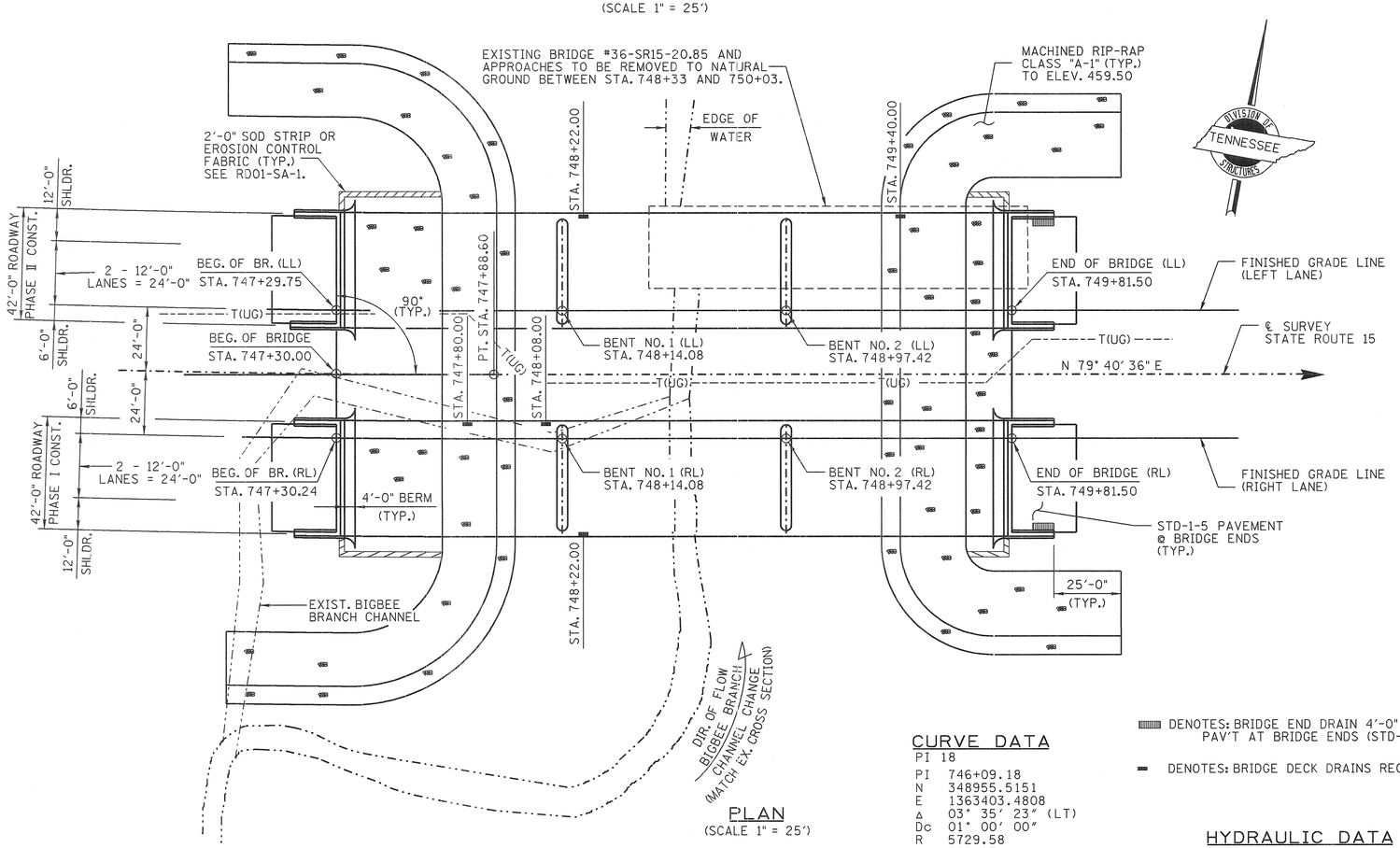

PLAN

(SCALE 1" = 25')

LIST OF DRAWINGS

	DWG. NO.	LAST REV. DATE
LAYOUT OF BRIDGE	U-52-113	
GENERAL NOTES ℄ ESTIMATED QUANTITIES	U-52-114	
FOUNDATION DATA	U-52-115	
FOUNDATION DATA	U-52-116	
SUPERSTRUCTURE (LEFT ℄ RIGHT LANES)	U-52-117	
SUPERSTRUCTURE DETAILS (LEFT ℄ RIGHT LANES)	U-52-118	
SUPERSTRUCTURE DETAILS (LEFT ℄ RIGHT LANES)	U-52-119	
SCREED	U-52-120	
PRESTRESSED BULB-TEE BEAM DETAILS	U-52-121	
ABUTMENT NO. 1 (LEFT LANE)	U-52-122	
ABUTMENT NO. 1 DETAILS (LEFT LANE)	U-52-123	
ABUTMENT NO. 1 (RIGHT LANE)	U-52-124	
ABUTMENT NO. 1 DETAILS (RIGHT LANE)	U-52-125	
ABUTMENT NO. 2 (LEFT ℄ RIGHT LANES)	U-52-126	
ABUTMENT NO. 2 DETAILS (LEFT ℄ RIGHT LANES)	U-52-127	
BENT NO. 1 (LEFT LANE)	U-52-128	
BENT NO. 2 (LEFT LANE)	U-52-129	
BENT NO. 1 (RIGHT LANE)	U-52-130	
BENT NO. 2 (RIGHT LANE)	U-52-131	
BENT NOS. 1 ℄ 2 DETAILS (LEFT ℄ RIGHT LANES)	U-52-132	
FINAL FOUNDATION DATA (LEFT ℄ RIGHT LANES)	U-52-133	
BILL OF STEEL	U-52-134	
BILL OF STEEL	U-52-135	

LIST OF STANDARD DRAWINGS

	DWG. NO.	LAST REV. DATE
BRIDGE RAILING SINGLE SLOPE CONCRETE PARAPET	STD-1-1SS	6-01-11
SLIDER PLATES FOR SINGLE SLOPE PARAPETS AND DECK DRAINS	STD-1-2SS	
PAVEMENT AT BRIDGE ENDS	STD-1-5	6-01-11
BRIDGE END DRAIN W/ PABE	STD-1-6	4-28-97
BRIDGE END DRAIN W/ PABE	STD-1-7	8-24-11
BRIDGE END DRAIN 4'×8'-7" W/ PABE	STD-1-9	5-01-95
STD. PRECAST PRESTRESSED BRIDGE DECK PANELS GENERAL DETAILS	STD-4-1	4-08-05
STD. PRECAST PRESTRESSED BRIDGE DECK PANELS DESIGN CRITERIA	STD-4-2	4-08-05
STD. PRECAST PRESTRESSED BRIDGE DECK PANELS GENERAL DETAILS	STD-4-3	3-02-02
STD. PRECAST PRESTRESSED BRIDGE DECK PANELS CONSTRUCTION DETAILS	STD-4-4	6-10-96
STANDARD PILE DETAILS	STD-5-1	10-25-93
STANDARD SEISMIC DETAILS	STD-6-1	11-01-10
REINF. BAR SUPPORT DETAILS FOR CONC. SLABS	STD-9-1	10-07-08
MISCELLANEOUS ABUTMENT ℄ DRAINAGE DETAILS	STD-10-1	4-08-05
STD. DETAILS AND INTERMEDIATE DIAPHRAGM DETAILS FOR BULB-TEE BEAMS	STD-14-1	10-15-08
SAFETY APPROACH TO UNDERPASSES GRADING DESIGN ℄ SLOPE PROTECTION	RD01-SA-1	10-15-02

2 - 42'-0" ROADWAYS WITH STD-1-1SS PARAPETS
2029 ADT = 10,175
DESIGN SPEED = 65 MPH

BRIDGE NO. 2

STATE OF TENNESSEE
DEPARTMENT OF TRANSPORTATION

LAYOUT OF BRIDGE
STATE ROUTE 15
OVER
BIGBEE BRANCH
BRIDGE I.D. NO. 36SR0150023
STATION 748+55.75
LOG MILE 20.85
HARDIN COUNTY
2012

CURVE DATA

PI 18

PI	746+09.18
N	348955.5151
E	1363403.4808
Δ	03° 35' 23" (LT)
Dc	01° 00' 00"
R	5729.58
Lc	358.97
T	179.54
SE	0.033 FT/FT
DESIGN SPEED	65 MPH
TRANS. LENGTH	200'

▨ DENOTES: BRIDGE END DRAIN 4'-0" X 8'-7" REQUIRED WITH PAV'T AT BRIDGE ENDS (STD-1-6, 7, AND 9).

▬ DENOTES: BRIDGE DECK DRAINS REQUIRED (PARAPET TYPE) (SEE STD-1-2SS).

HYDRAULIC DATA

DRAINAGE AREA = 160.50 mi.²
DESIGN DISCHARGE @ THIS BRIDGE (100 YR.) = 6,006.19 cfs.
WATER AREA PROVIDED BELOW EL. 457.53 = 1463.03 ft.
TOTAL 100 YEAR DISCHARGE = 31188 cfs.
FLOW THROUGH BRIDGE NO. 36-SR15-21.20 = 25181.81 c.f.s.
100 YR. VELOCITY = 3.65 fps
100 YR. BRIDGE BACKWATER = 1.18 ft.
ROADWAY OVERTOPPING EL. = 461.77 ft.
500 YEAR DISCHARGE THIS BRIDGE = 8,804.95 cfs @ EL. 459.35.

KATHLEEN D. McLAUGHLIN STATE OF TENNESSEE 6/28/12

CORRECT Wayne J. Sieger
ENGINEER OF STRUCTURES

U-52-113

DESIGNED BY D. SHIKE (JKZ) DATE 9-10 (1-01)
DRAWN BY P. MOSHER (DJS) DATE 9-11 (9-10)
SUPERVISED BY MBC/KDM DATE 9-11
CHECKED BY DJS DATE 1-12

D:\pmmosher\LAY\LAY1021.dgn
12-JUL-2012
10:26

MACHINED RIP-RAP CLASS "A-3" = 280 TONS

MACHINED RIP-RAP CLASS "A-1" = 1760 TONS

GN1021.DGN

GENERAL NOTES

SPECIFICATIONS: STANDARD ROAD AND BRIDGE SPECIFICATIONS OF THE TENNESSEE DEPARTMENT OF TRANSPORTATION (MARCH 1, 2006 EDITION).

LOADING: HL-93 LIVE LOADING, SEISMIC CATEGORY A WITH AS = 0.126, SDS = 0.294, SD1 = 0.097, (1000 YEAR RETURN PERIOD). DEAD LOAD INCLUDES 35 LB/FT² FOR FUTURE WEARING SURFACE.

DESIGN SPECIFICATIONS: AASHTO LRFD FIFTH EDITION 2010, WITH ADDENDA, AND THE 2009 AASHTO GUIDE SPECIFICATIONS FOR LRFD SEISMIC BRIDGE DESIGN, EDITION 1 (WITH INTERIMS.)

CONCRETE: TO BE CLASS "A" (CAST IN PLACE) f'c = 3,000 psi EXCEPT AS NOTED OTHERWISE.

CLASS "D" CONCRETE FOR BRIDGE DECKS SHALL BE IN ACCORDANCE WITH SECTION 604 OF THE STANDARD SPECIFICATIONS.

BRIDGE DECK SURFACE FINISH: TO BE IN ACCORDANCE WITH NOTE "C" IN ARTICLE 604.22 OF THE STANDARD SPECIFICATIONS.

BRIDGE DECK FORMS: BRIDGE DECK FORMS FOR CONCRETE DECKS SHALL BE CONSTRUCTED USING EITHER REMOVABLE FORMS OR PERMANENT FORMS. PERMANENT FORMS MAY BE EITHER REMAIN-IN-PLACE STEEL OR PRECAST, PRESTRESSED CONCRETE PANELS. IN EITHER CASE, FORMS SHALL BE ATTACHED BY MEANS OTHER THAN WELDING TO MAIN STRUCTURAL MEMBERS OR REINFORCING STEEL. TEMPORARY ERECTION DIAPHRAGMS MUST BE USED AT THE ENDS OF PRECAST CONCRETE GIRDERS WHERE END DIAPHRAGMS, SUPPORT DIAPHRAGMS, OR ABUTMENT BACKWALLS ARE TO BE POURED CONCURRENTLY WITH THE DECK AND SHALL BE PROVIDED ELSEWHERE IN ACCORDANCE WITH THE SPECIFICATIONS TO PREVENT GIRDER ROTATION. SEE STANDARD DRAWINGS STD-4-1 THRU 4, STD-14-1 AND ARTICLE 604.05 OF THE STANDARD SPECIFICATIONS.

SLAB OVERHANGS SUPPORTED BY BULB-TEE BEAMS: IT IS RECOMMENDED THAT SPACING OF OVERHANG BRACKETS FOR BULB-TEE BEAMS NOT EXCEED 2'-0" CENTER TO CENTER.

SPECIAL NOTE: FOUNDATIONS FOR BENTS SHALL BE EXCAVATED TO THE BOTTOM OF FOOTING ELEVATIONS SHOWN; ROD SOUNDINGS SHALL THEN BE MADE AS DIRECTED BY THE ENGINEER. FROM THE RESULTS OBTAINED, THE ENGINEER WILL DECIDE IF PILES WILL BE USED OR THE FOOTINGS CARRIED TO ROCK. COST OF ROD SOUNDING TO BE INCLUDED IN THE UNIT PRICE BID FOR OTHER ITEMS. NO REINFORCING STEEL FOR BENT COLUMNS OR FOOTINGS SHALL BE ORDERED UNTIL FINAL ELEVATIONS HAVE BEEN DETERMINED.

BRIDGE RAIL SYSTEM: BUILD BRIDGE RAILINGS ACCORDING TO STANDARD DRAWING STD-1-1SS. THE RAILING SHALL BE FORMED AND CAST PLUMB, NOT PERPENDICULAR TO THE SLAB. THE DIMENSIONS AT THE TRAFFIC FACE SHALL BE KEPT CONSTANT, WITH VARIATION DUE TO CROSS SLOPE ACCOMMODATED AT THE REAR FACE.

NOTE: THE CONTRACTOR SHALL PROVIDE 100% CONVENTIONAL FALL PROTECTION FOR WORKERS INSTALLING DECKING ABOVE 15 FEET.

SHOP DRAWINGS: SEE SECTION 105.02 OF THE STANDARD SPECIFICATIONS.

RIP-RAP: MACHINED RIP-RAP SHALL BE CLASS "A-1" IN ACCORDANCE WITH SECTION 709 OF THE STANDARD SPECIFICATIONS AND SHALL BE MEASURED AND PAID FOR UNDER ROADWAY ITEM 709-05.06.

MACHINED RIP-RAP: MACHINED RIP-RAP FOR SLOPE PROTECTION SHALL BE 2" TO 6" IN SIZE UNIFORMLY GRADED AND MEET THE REQUIREMENTS OF SECTION 709 OF THE STANDARD SPECIFICATIONS FOR ROAD AND BRIDGE CONSTRUCTION AND SHALL BE MEASURED AND PAID FOR UNDER ROADWAY ITEM 709-05.05 - TON

FINISHING CONCRETE SURFACES: CONCRETE FINISHING SHALL BE IN ACCORDANCE WITH SECTION 604.21 OF THE TENNESSEE STANDARD SPECIFICATION. A CLASS I FINISH FOLLOWED BY AN APPLIED TEXTURE FINISH SHALL BE USED IN LIEU OF A CLASS II FINISH. NO TEXTURE FINISH SHALL BE APPLIED PRIOR TO COMPLETION OF PAVING AND HAULING OPERATIONS AT THE BRIDGE SITE. THE APPLIED TEXTURE FINISH SHALL BE MEASURED AND PAID FOR UNDER ITEM NO. 604-04.01.

REINFORCING STEEL: SHALL BE ASTM A615 GRADE 60 UNLESS NOTED OTHERWISE. SEE SECTION 604 AND 907 OF THE STANDARD SPECIFICATIONS.

NOTE: THE FILLS AT THE ENDS OF THE BRIDGE SHALL BE IN PLACE AND THOROUGHLY COMPACTED BEFORE ANY ABUTMENT PILES ARE DRIVEN.

PILES: TO BE HP10 × 42 DRIVEN TO REFUSAL OR A MINIMUM BEARING OF 55 TONS FOR THE ABUTMENTS AND 55 TONS FOR THE BENTS.

VALUE ENGINEERING ALTERNATE BRIDGE DESIGN CRITERIA: ALTERNATE BRIDGE DESIGN PROPOSALS MAY NOT DIMINISH THE FUNCTIONAL OR STRUCTURAL EQUIVALENCY OF THE BRIDGE AND MUST MEET OR EXCEED BOTH THE SERVICE LEVEL AND ULTIMATE CAPACITIES OF THE CONTRACT PLANS STRUCTURE. ADDITIONALLY, THE WATERWAY OPENING AND FLOOD CLEARANCES MAY NOT BE REDUCED; FOR GRADE SEPARATIONS, THE HORIZONTAL CLEARANCES MAY NOT BE REDUCED, NOR MAY THE VERTICAL CLEARANCES BE LESS THAN THE MINIMUM ACCEPTABLE FOR THE TYPE FACILITY CROSSED.

FOUNDATION PREPARATION: SEE SECTION 204 OF THE STANDARD SPECIFICATIONS. IF COFFERDAMS ARE REQUIRED, THEY SHALL BE IN ACCORDANCE WITH SECTION 204.09 OF THE STANDARD SPECIFICATIONS.

NOTE: PILES SHALL BE EQUIPPED WITH CAST STEEL POINTS. ALSO, SEE STANDARD DRAWING STD-5-1 FOR ADDITIONAL NOTES.

CONST. NO.	36001-3290-14	
PROJECT NO.	YEAR	SHEET NO.
NHE-15(108)	2012	

REVISIONS

NO.	DATE	BY	BRIEF DESCRIPTION

ESTIMATED QUANTITIES

NOTE	ITEM NO.	DESCRIPTION	UNIT	GRAND TOTAL	LEFT LANE TOTAL	LEFT LANE SUPERSTRUCTURE	LEFT LANE ABUTMENT NO. 1	LEFT LANE BENT NO. 1	LEFT LANE BENT NO. 2	LEFT LANE ABUTMENT NO. 2	RIGHT LANE TOTAL	RIGHT LANE SUPERSTRUCTURE	RIGHT LANE ABUTMENT NO. 1	RIGHT LANE BENT NO. 1	RIGHT LANE BENT NO. 2	RIGHT LANE ABUTMENT NO. 2
(11)	202-04.02	REMOVAL OF STRUCTURES (EXISTING BRIDGE NO. 36-SR15-20.85)	L.S.	1												
(2)	204-02.01	DRY EXCAVATION (BRIDGES)	C.Y.	580	290		86	73	47	84	290		86	73	47	84
(2)	204-03.01	WET EXCAVATION (BRIDGES)	C.Y.	892	446			223	223		446			223	223	
(10)	204-10.05	FOUNDATION PREPARATION (BENT NO. 1 LT. LN., STA. 748+14.08)	L.S.	1	1			1								
(10)	204-10.06	FOUNDATION PREPARATION (BENT NO. 2 LT. LN., STA. 748+97.42)	L.S.	1	1				1							
(10)	204-10.07	FOUNDATION PREPARATION (BENT NO. 1 RT. LN., STA. 748+14.08)	L.S.	1							1			1		
(10)	204-10.08	FOUNDATION PREPARATION (BENT NO. 2 RT. LN., STA. 748+97.42)	L.S.	1							1				1	
(8)	303-01.02	GRANULAR BACKFILL (BRIDGES)	TON	60	30		15			15	30		15			15
	604-02.03	EPOXY COATED REINFORCING STEEL	LB.	155,676	77,838	74,622	1,608			1,608	77,838	74,622	1,608			1,608
(7)	604-03.01	CLASS 'A' CONCRETE (BRIDGES)	C.Y.	604	302		51	102	99	50	302		51	102	99	50
	604-03.02	STEEL BAR REINFORCEMENT (BRIDGES)	LB.	86,938	43,469	1,459	5,670	15,767	15,168	5,405	43,469	1,459	5,670	15,767	15,168	5,405
(1)	604-03.04	PAVEMENT AT BRIDGE ENDS	S.Y.	430	215						215					
	604-03.09	CLASS 'D' CONCRETE (BRIDGE DECK)	C.Y.	628	314	314					314	314				
	604-04.01	APPLIED TEXTURE FINISH (NEW STRUCTURES)	S.Y.	2,627	1,312	1,037	31	113	101	30	1,315	1,037	31	115	102	30
	604-05.31	BRIDGE DECK GROOVING (MECHANICAL)	S.Y.	2,584	1,292						1,292					
	606-02.03	STEEL PILES (10 INCH)	L.F.	3,438	1,719		450	378	459	432	1,719		450	378	459	432
(12)	606-02.06	PILE TIPS (STEEL PILES, 10 INCH)	EA.	144	72		9	27	27	9	72		9	27	27	9
(5)(4)	615-01.10	PRESTRESSED CONCRETE BULB-TEE BEAM (6" WEB) (BT-54)	L.F.	2,456	1,228						1,228					
(9)	620-05.01	CONCRETE PARAPET SINGLE SLOPE (STD-1-1SS)	L.F.	1,132	566						566					
(6)	710-09.01	6" PERF. PIPE WITH VERTICAL DRAIN SYSTEM	L.F.	264	132		66			66	132		66			66
	710-09.02	6" PIPE UNDERDRAIN	L.F.	71	35		18			17	36		19			17

(1) NOTE: PRIOR TO CONSTRUCTION OF THE PAVEMENT AT BRIDGE ENDS, THE CONTRACTOR SHALL SUBMIT A PROPOSED BILL OF STEEL TO THE ENGINEER FOR APPROVAL.

(2) NOTE: EXCAVATION BASED ON FINAL PROFILE AT ABUTMENTS AND EXISTING GROUND AT BENTS.

(3) NOTE: THE COST OF BITUMINOUS-FIBERBOARD AND ALL MISCELLANEOUS JOINT MATERIAL TO BE INCLUDED IN THE UNIT PRICE BID FOR OTHER ITEMS.

(4) NOTE: COST OF ELASTOMERIC PADS AND RUBBER BONDING CEMENT TO BE INCLUDED IN THE UNIT PRICE BID FOR THE PRESTRESSED BEAM.

(5) NOTE: INTERMEDIATE DIAPHRAGMS SHALL BE PAID FOR IN ACCORDANCE WITH STANDARD DRAWING STD-14-1.

(6) NOTE: COST OF POLYETHYLENE SHEETING AND ALL MISCELLANEOUS ITEMS NECESSARY FOR INSTALLATION TO BE INCLUDED IN THE UNIT PRICE BID FOR PERFORATED PIPE.

(7) NOTE: THE COST OF ALL MATERIALS AND LABOR NECESSARY FOR THE INSTALLATION OF 76 ANCHOR BOLT ASSEMBLIES SHALL BE INCLUDED IN THE UNIT PRICE BID FOR CLASS "A" CONCRETE (BRIDGES), ITEM NO. 604-03.01.

(8) NOTE: GRANULAR BACKFILL SHALL BE CLASS "A" GRADING "D" MATERIAL. SEE STANDARD DRAWING STD-10-1.

(9) NOTE: COST OF 5 BRIDGE DECK DRAINS TO BE INCLUDED IN THE UNIT PRICE BID FOR THE PARAPET.

(10) NOTE: SEE FOUNDATION PREPARATION NOTE THIS SHEET.

(11) NOTE: LUMP SUM: TO INCLUDE COMPLETE REMOVAL OF EXISTING BRIDGE NO. 36-SR15-20.85 TO NATURAL GROUND BETWEEN STA. 748+33.00 AND STA. 750+03.00. MAINTAIN TRAFFIC ON EXISTING STRUCTURE DURING PHASE CONSTRUCTION. EXISTING BRIDGE IS 142'-6" LONG, 34'-6" WIDE AND CONSISTS OF 5 SPANS OF CONCRETE DECK GIRDERS AND BOX BEAMS WITH CONCRETE SUBSTRUCTURES.

(12) NOTE: THE UNIT PRICE BID FOR THE CAST STEEL POINTS SHALL INCLUDE FURNISHING AND INSTALLATION TO PILES.

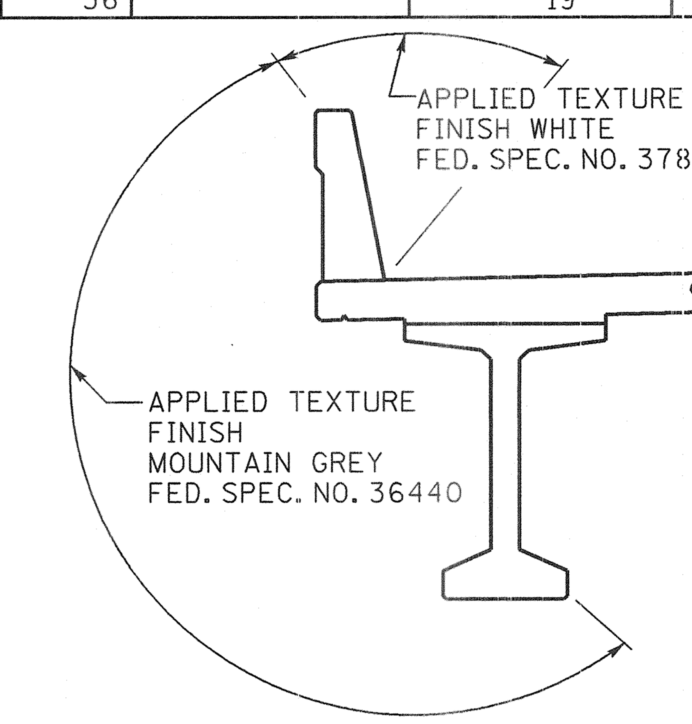

APPLIED TEXTURE FINISH SKETCH

NOTE: IN ADDITION TO THE SURFACES SHOWN IN THE APPLIED TEXTURE FINISH SKETCH ALL EXPOSED SURFACES OF WINGWALLS, ABUTMENT BEAMS, BENTS AND EXTERIOR PORTIONS OF ENDWALLS ARE TO RECEIVE AN APPLIED TEXTURE FINISH (MOUNTAIN GREY, FED. SPEC. NO. 36440).

DESIGNED BY D. SHIKE DATE 9-10
DRAWN BY P. MOSHER DATE 10-11
SUPERVISED BY MBC/KDM DATE 10-11
CHECKED BY DJS DATE 1-12

D:\pmmdgn\GN\GN1021.dgn
17-JAN-2012
15:02

KATHLEEN D. McLAUGHLIN STATE OF TENNESSEE 6/28/12

BRIDGE NO. 2

STATE OF TENNESSEE
DEPARTMENT OF TRANSPORTATION

GENERAL NOTES AND ESTIMATED QUANTITIES
STATE ROUTE 15
OVER
BIGBEE BRANCH
STATION 748+55.75
LOG MILE 20.85
HARDIN COUNTY
2012

CORRECT ______ ENGINEER OF STRUCTURES

U-52-114

DAT1021.DGN

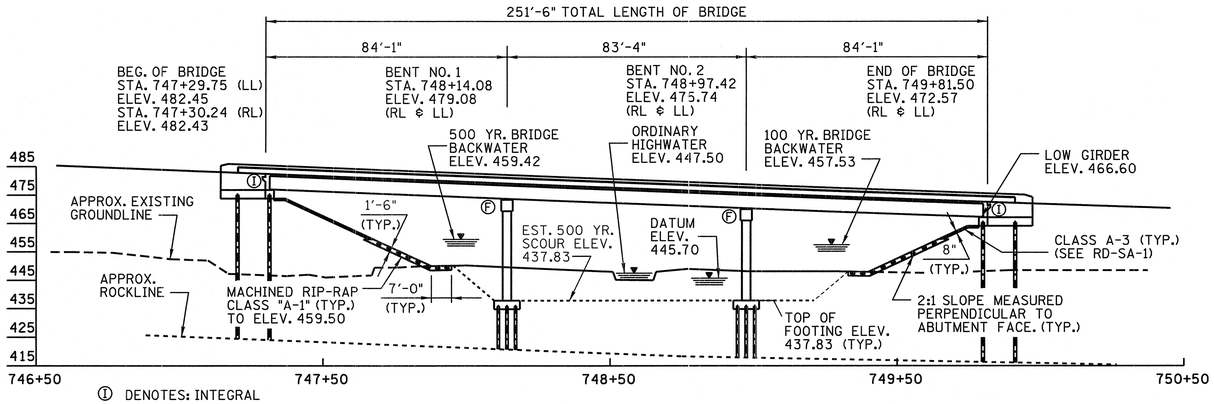

ELEVATION
(SCALE 1" = 25')

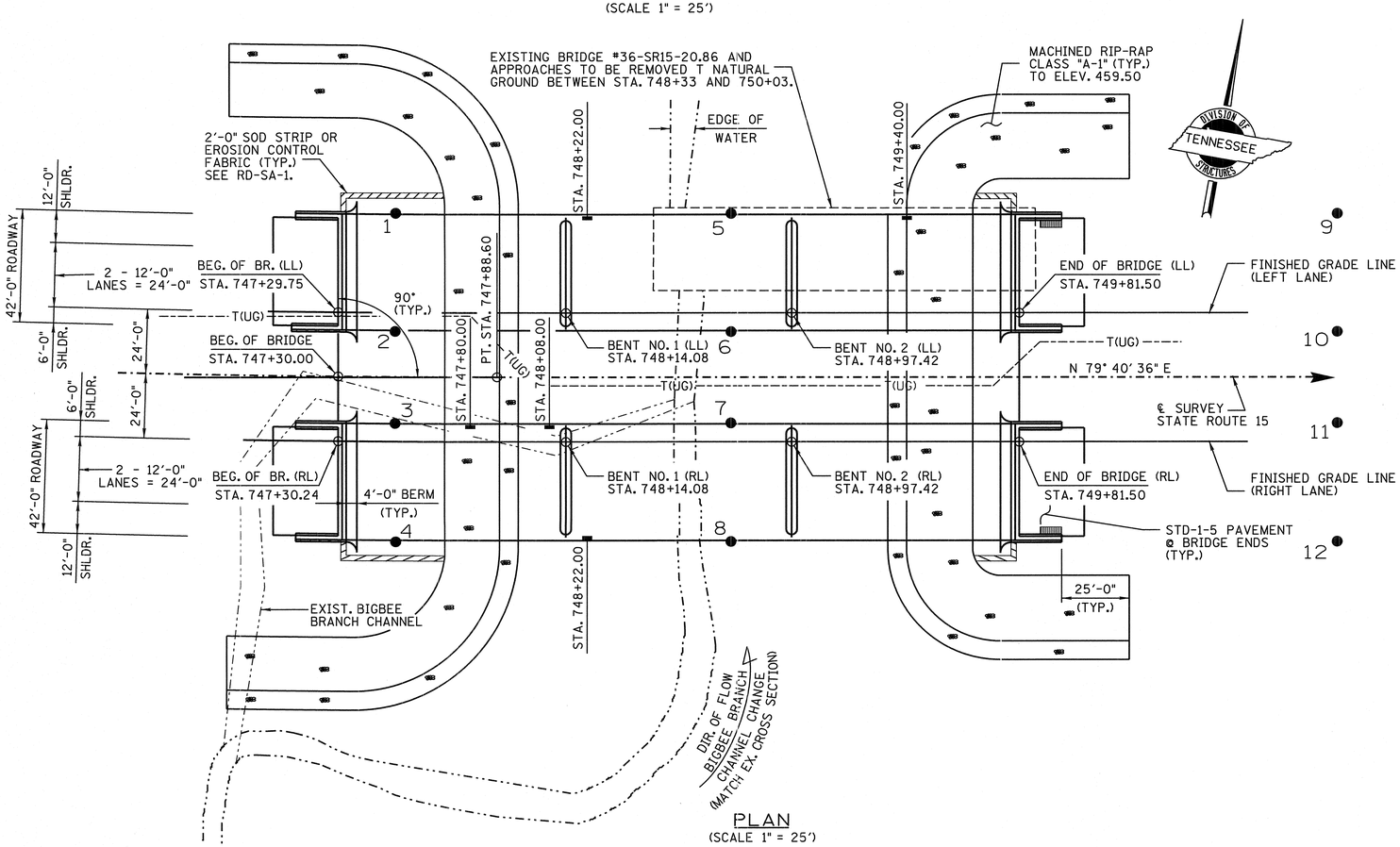

PLAN
(SCALE 1" = 25')

CONST. NO. 36001-3290-14

PROJECT NO.	YEAR	SHEET NO.
NHE-15(108)	2012	

REVISIONS

NO.	DATE	BY	BRIEF DESCRIPTION

NOTES:

REQUIRED:

1) SUFFICIENT GROUND, ROCK AND CORING INFORMATION FOR BRIDGE FOUNDATION.
2) APPROXIMATE EXISTING GROUND AND ROCK LINE.
3) DESIGN SPECIFICATIONS: AASHTO LRFD FIFTH EDITION, 2010, WITH ADDENDA, AND THE 2009 AASHTO GUIDE SPECIFICATIONS FOR LRFD SEISMIC BRIDGE DESIGN, EDITION 1 (WITH INTERIMS). SEISMIC CATEGORY A WITH AS = 0.126, SDS = 0.294, SD1 = 0.097, (1000 YR. RETURN PERIOD.)

BENCHMARKS:

T.B.M. #35
C.P.S. IN 10" ELM TREE, 1.0' ABOVE GROUND, 114' N. OF EXIST. ℄ STATE ROUTE 15, E. OF BIRDIE LANE, 21' SE OF 6' CHAIN LINK FENCE (DUMP COLLECTION AREA).
STA 730+62.87, 114.47' LT.
ELEV. 552.82

T.B.M. #36
C.P.S. IN W. FACE OF POWER POLE, 1.0' ABOVE GROUND, 30' SOUTH OF EXIST. ℄ OLD SCHHOL HOUSE ROAD.
STA 731+29.98, 299.33' RT.
ELEV. 542.69

NOTE: THIS DRAWING IS FOR FOUNDATION DATA ONLY AND IS NOT TO BE USED AS A LAYOUT.

BRIDGE NO. 2

STATE OF TENNESSEE
DEPARTMENT OF TRANSPORTATION
FOUNDATION DATA
STATE ROUTE 15
OVER
BIGBEE BRANCH
BRIDGE I.D. NO. 36SR0150023
STATION 748+55.75
LOG MILE 20.8
HARDIN COUNTY
2012

CORRECT Wayne G. Seger
ENGINEER OF STRUCTURES

U-52-115

DESIGNED BY D. SHIKE (JKZ) DATE 9-10 (1-01)
DRAWN BY M. DYE (DJS/PMM) DATE 10-11 (9-10/3-09)
SUPERVISED BY MBC/KDM DATE 10-11
CHECKED BY DATE

D:\mark_dye\dgn\dat\DAT1021.dgn
10-JAN-2012
09:33

DAT1021.DGN

CONST. NO. 36001-3290-14

PROJECT NO.	YEAR	SHEET NO.
NHE-15(108)	2012	

REVISIONS

NO.	DATE	BY	BRIEF DESCRIPTION

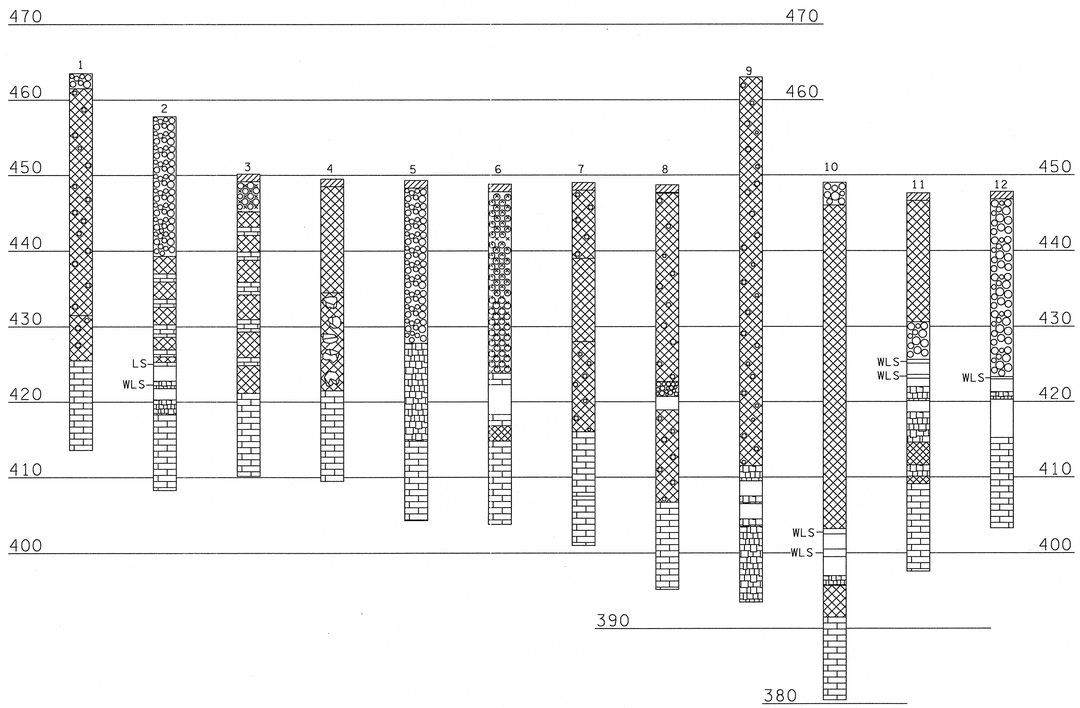

— LEGEND —

- TOPSOIL
- GRAVEL WITH CLAY LAYERS/ GRAVELLY CLAY
- CAVITY
- GRAVEL
- CLAY (SILTY)
- CLAY AND BOULDERS
- SAND WITH GRAVEL / GRAVELLY SAND
- CLAY WITH ROCK LAYERS
- WLS — LIMESTONE (MODERATELY TO SEVERELY WEATHERED)
- LIMESTONE (SLIGHTLY WEATHERED TO GENERALLY SOUND)
- 49.9' — TERMINATED DEPTH
- CORE NO. 1 2

GROUND AND ROCK ELEVATIONS

1.	G.463.5 / R.425.5	7.	G.449.0 / R.416.0
2.	G.457.8 / R.425.3	8.	G.448.7 / R.406.7
3.	G.450.16 / R.421.16	9.	G.463.0 / R.411.5
4.	G.449.5 / R.421.2	10.	G.449.0 / R.403.2
5.	G.449.3 / R.427.8	11.	G.447.6 / R.425.6
6.	G.448.8 / R.423.3	12.	G.447.8 / R.423.3

NOTE: BORING DEPICTIONS SHOWN ON FOUNDATION DATA SHEET INDICATE GENERAL SOIL AND ROCK TYPES AT THE SPECIFIC BORING LOCATIONS.

TO ASSIST IN BID PRERARATION FOR FOUNDATION CONSTRUCTION. DETAILED ROCK AND SOIL DESCRIPTIONS AND, ON SOME PROJECTS, ROCK SAMPLES ARE AVAILABLE FOR INSPECTION AT THE MATERIALS AND TESTS HEADQUARTERS AT 6601 CENTENNIAL BLVD. NASHVILLE, TN. (615-350-4130).

BRIDGE NO. 2

STATE OF TENNESSEE
DEPARTMENT OF TRANSPORTATION

FOUNDATION DATA
STATE ROUTE 15
OVER
BIGBEE BRANCH
BRIDGE I.D. NO. 36SR0150023
STATION 748+55.75
LOG MILE 20.8
HARDIN COUNTY
2012

DESIGNED BY	D. SHIKE (JKZ)	DATE	9-10 (1-01)
DRAWN BY	M. DYE (DJS/PMM)	DATE	10-11 (9-10/3-09)
SUPERVISED BY	MBC/KDM	DATE	10-11
CHECKED BY		DATE	

CORRECT Wayne A. Sieger
ENGINEER OF STRUCTURES

U-52-116

D:\mark.dye\dgn\dat\DAT1021.dgn
15-JAN-2012
10:34

SUP1021.DGN

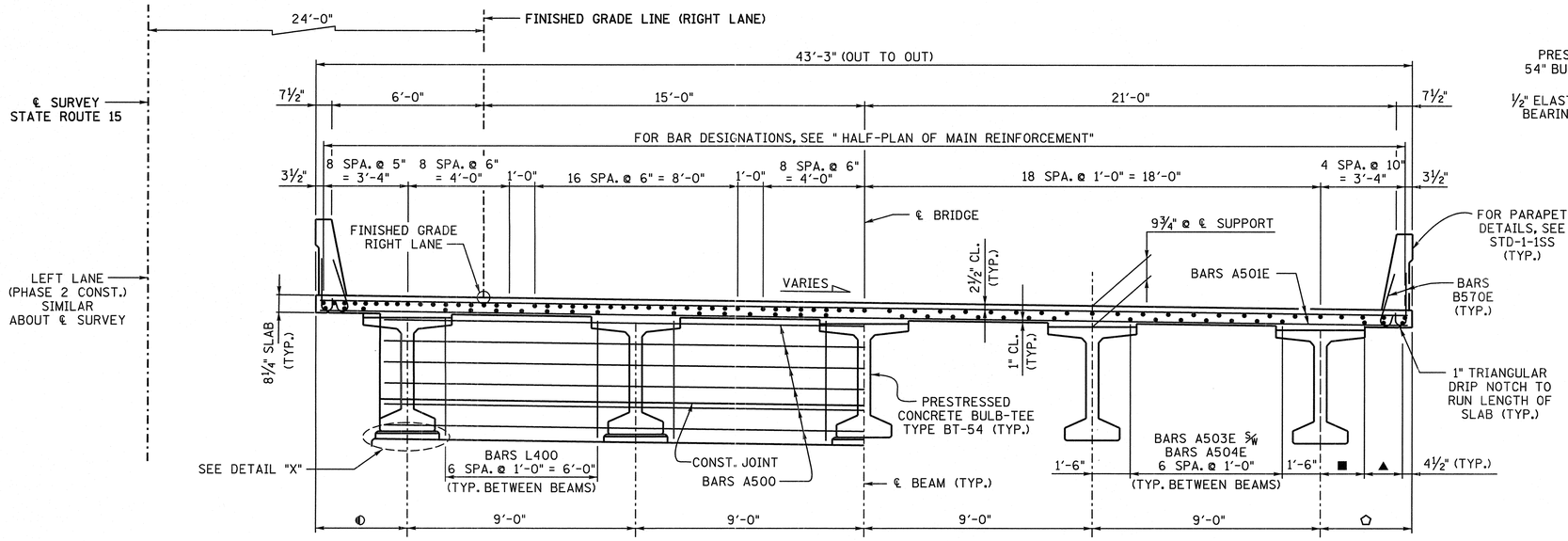

TYPICAL AT SUPPORT

TYPICAL NEAR MID-SPAN

▲ DENOTES: BARS A503E ⅝W BARS A504E
2 SPA. @ 9" = 1'-6"
◐ DENOTES: SPAN NO. 1 VARIES FROM 3'-7½" TO 3'-6⅛".
SPAN NO. 2 ⊕ 3 = 3'-7½".
⬠ DENOTES: SPAN NO. 1 VARIES FROM 3'-7½" TO 3'-8⅞".
SPAN NO. 2 ⊕ 3 = 3'-7½".
■ DENOTES: SPAN NO. 1 VARIES. SPAN NO. 2 ⊕ 3 = 1'-9".

TYPICAL CROSS SECTION

(LOOKING FORWARD ON SURVEY)
(RIGHT LANE, PHASE 1 CONSTRUCTION SHOWN)

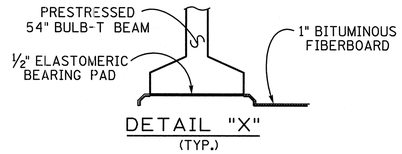

DETAIL "X"
(TYP.)

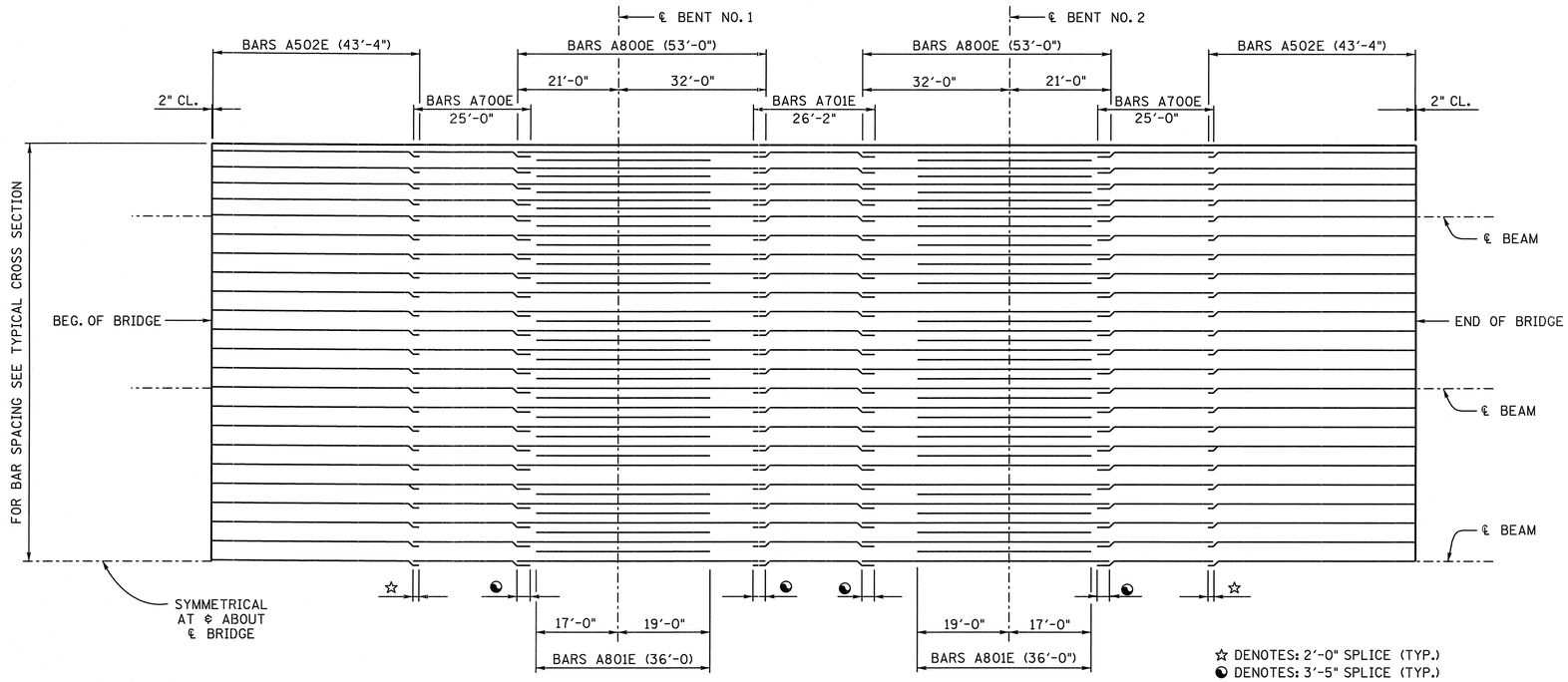

☆ DENOTES: 2'-0" SPLICE (TYP.)
◐ DENOTES: 3'-5" SPLICE (TYP.)

HALF-PLAN OF MAIN REINFORCEMENT

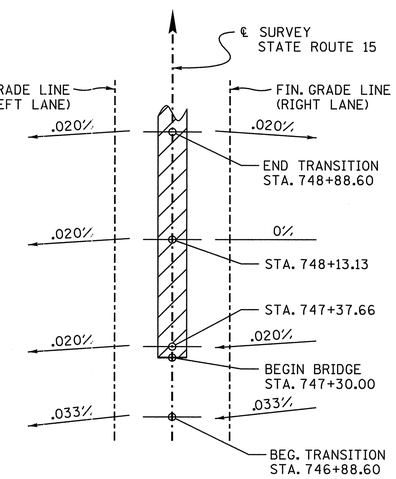

TRANSITION SKETCH

CONST. NO. 36001-3290-14

PROJECT NO.	YEAR	SHEET NO.
NHE-15(108)	2012	

REVISIONS

NO.	DATE	BY	BRIEF DESCRIPTION

NOTE: NO PORTION OF THE PARAPET SHALL BE POURED UNTIL THE ENTIRE DECK SLAB IS IN PLACE.

NOTE: OUTSIDE EDGE OF SLAB AND BRIDGERAIL TO CONFORM TO HORIZONTAL CURVE.

NOTE: WHEN POURING SLAB, PROVISIONS SHALL BE MADE FOR SETTING REINFORCING STEEL FOR THE PARAPET. THE PARAPET SHALL NOT BE POURED UNTIL THE SLAB IS POURED AND CURED. ALSO SEE DRAWING NO. STD-1-1SS.

NOTE: THE CONTRACTOR IS SOLELY RESPONSIBLE FOR SUPPORTING THE BEAMS TO PREVENT DAMAGE DUE TO TWISTING OR OVERTURNING DURING ALL PHASES OF CONSTRUCTION. IT IS STRONGLY RECOMMENDED THAT THE TEMPORARY ERECTION DIAPHRAGMS BE INSTALLED AND THE PERMANENT INTERMEDIATE DIAPHRAGMS BE POURED AND CURED PRIOR TO PLACING ANY LOADS ON THE GIRDERS. HOWEVER, TEMPORARY ERECTION DIAPHRAGMS AND PERMANENT INTERMEDIATE DIAPHRAGMS MUST BE IN PLACE IN THE SPAN AT THE TIME THE SLAB IS POURED IN SAID SPAN.

NOTE: THE SUPPORT DIAPHRAGMS AT THE PIER SHALL BE FORMED AND THE BOTTOM 15 INCHES POURED AS SOON AS POSSIBLE AFTER THE BEAMS HAVE BEEN SET. THE REMAINDER OF THE DIAPHRAGM SHALL BE POURED CONCURRENTLY WITH THE DECK SLAB. THE BEAMS SHALL ATTAIN AN AGE OF AT LEAST 90 DAYS PRIOR TO POURING THE REMAINDER OF THE SUPPORT DIAPHRAGMS AND DECK SLAB. ALL DIAPHRAGM CONCRETE SHALL BE INCLUDED IN THE QUANTITY FOR ITEM NO. 604-03.09.

ESTIMATED QUANTITIES

CLASS 'D' CONCRETE (BRIDGE DECK) C.Y.	STEEL BAR REINFORCEMENT (BRIDGES) LBS.	EPOXY COATED REINFORCING STEEL LBS.
314	1,459	74,622

(PER EACH LANE)

BRIDGE NO. 2

STATE OF TENNESSEE
DEPARTMENT OF TRANSPORTATION

SUPERSTRUCTURE
(LEFT AND RIGHT LANES)
STATE ROUTE 15
OVER
BIGBEE BRANCH
STATION 748+55.75
LOG MILE 20.85
HARDIN COUNTY
2012

KATHLEEN D. McLAUGHLIN
STATE OF TENNESSEE
REGISTERED ENGINEER
No. 102591
6/28/12

CORRECT Wayne J. Sepe
ENGINEER OF STRUCTURES

DESIGNED BY	D. SHIKE	DATE	09-10
DRAWN BY	BILL EASTON	DATE	07-11
SUPERVISED BY	MBC / KDM	DATE	07-11
CHECKED BY	DJS	DATE	01-12

D:\Dgn\Sup\SUP1021.dgn
10:48
10-APR-2012

U-52-117

SUP1021.DGN

CONST. NO. 36001-3290-14

PROJECT NO.	YEAR	SHEET NO.
NHE-15(108)	2012	

REVISIONS

NO.	DATE	BY	BRIEF DESCRIPTION

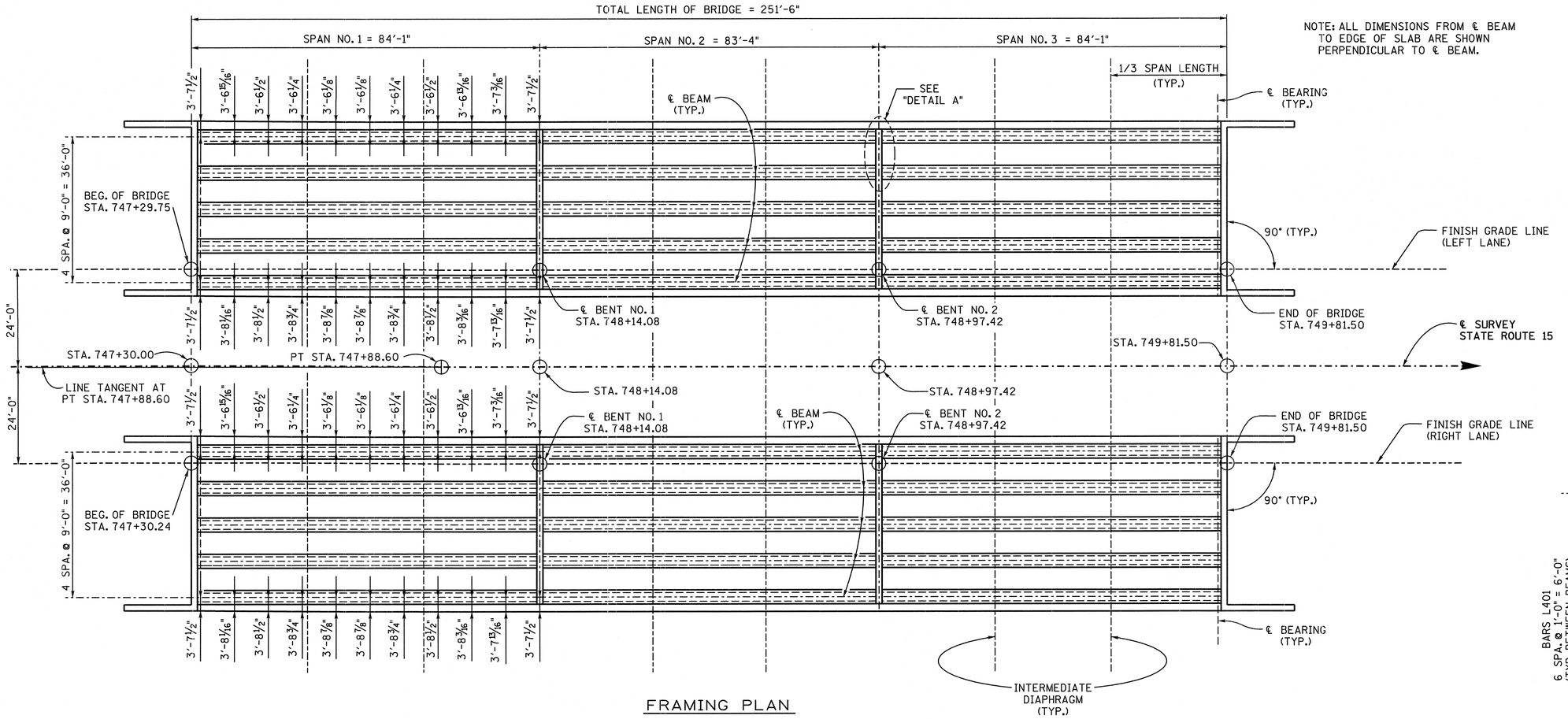

NOTE: ALL DIMENSIONS FROM ℄ BEAM TO EDGE OF SLAB ARE SHOWN PERPENDICULAR TO ℄ BEAM.

FRAMING PLAN

(RIGHT LANE SHALL BE PHASE 1 CONSTRUCTION)
(LEFT LANE SHALL BE PHASE 2 CONSTRUCTION)

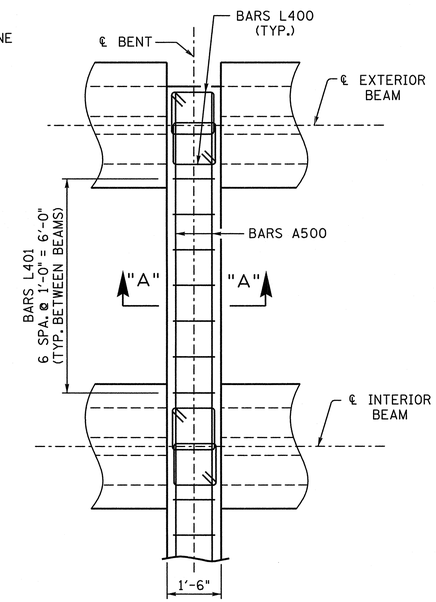

DETAIL A

(TYP. EACH BENT)

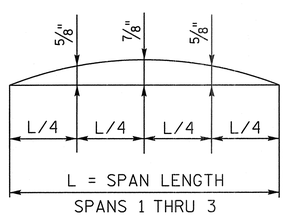

DEAD LOAD CORRECTION CURVE: THIS CURVE IS FOR DEAD LOAD SLAB AND ALL DEAD LOADS THAT ARE APPLIED AFTER SLAB IS IN PLACE AND SHOULD BE CORRECTED TO COMPENSATE FOR THE EFFECTS DUE TO VERTICAL CURVE IN SPAN NO. 3. IF PRESTRESSED DECK PANELS ARE USED AND THE BEAMS ARE PROFILED AFTER PANELS ARE IN PLACE, REDUCE THE DEAD LOAD CORRECTION VALUES SHOWN BY 25%.

DEAD LOAD CORRECTION CURVES

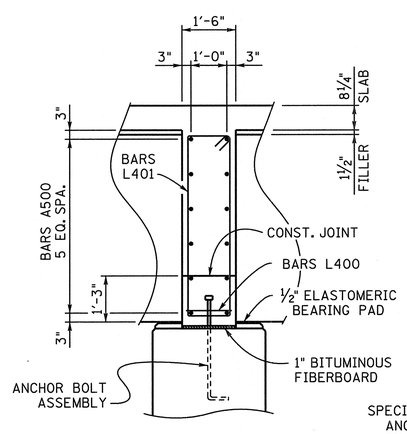

SECTION "A"-"A"

(TYP. EACH BENT)

SPECIAL NOTE FOR ANCHOR BOLTS AT BENT: ANCHOR BOLT ASSEMBLIES AT BENT SHALL BE IN ACCORDANCE WITH STANDARD DRAWING STD-6-1.

KATHLEEN D. McLAUGHLIN — REGISTERED ENGINEER — STATE OF TENNESSEE — 10/20/12

CORRECT Dwayne J. Tayon
ENGINEER OF STRUCTURES

BRIDGE NO. 2

STATE OF TENNESSEE
DEPARTMENT OF TRANSPORTATION

SUPERSTRUCTURE DETAILS
(LEFT AND RIGHT LANES)
STATE ROUTE 15
OVER
BIGBEE BRANCH
STATION 748+55.75
LOG MILE 20.85
HARDIN COUNTY
2012

DESIGNED BY	D. SHIKE	DATE	09-10
DRAWN BY	BILL EASTON	DATE	07-11
SUPERVISED BY	MBC / KDM	DATE	07-11
CHECKED BY	DJS	DATE	01-12

D:\Dgn\Sup\SUP1021.dgn
15-JAN-2012
10:40

U-52-118

SUP1021.DGN

CONST. NO. 36001-3290-14

PROJECT NO.	YEAR	SHEET NO.
NHE-15(108)	2012	

REVISIONS

NO.	DATE	BY	BRIEF DESCRIPTION

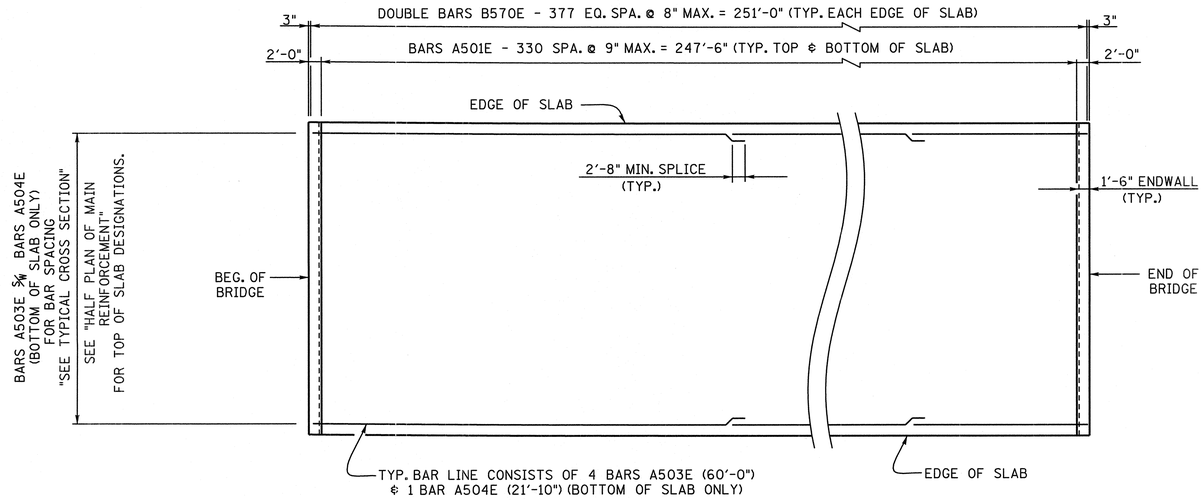

SLAB PLAN

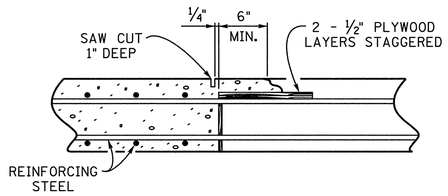

SLAB CONSTRUCTION JOINT DETAIL

DECK CONCRETE POURING SEQUENCE: SLAB CONSTRUCTION JOINTS MAY BE LOCATED AT THE CONTRACTOR'S OPTION SUBJECT TO THE FOLLOWING:

1) NO CONSTRUCTION JOINT MAY BE LOCATED CLOSER THAN 10 FEET OR FURTHER THAN 15 FEET FROM AN INTERIOR SUPPORT.

2) THE SLAB IN THE MIDDLE SECTION OF BOTH ADJACENT SPANS MUST BE POURED TO WITHIN AT LEAST 15 FEET OF THE SUPPORTS EITHER PRIOR TO OR CONCURRENTLY WITH THE SLAB OVER AN INTERIOR SUPPORT.

ALL SLAB CONSTRUCTION JOINTS SHALL BE IN ACCORDANCE WITH THE SLAB CONSTRUCTION JOINT DETAIL SHOWN ABOVE.

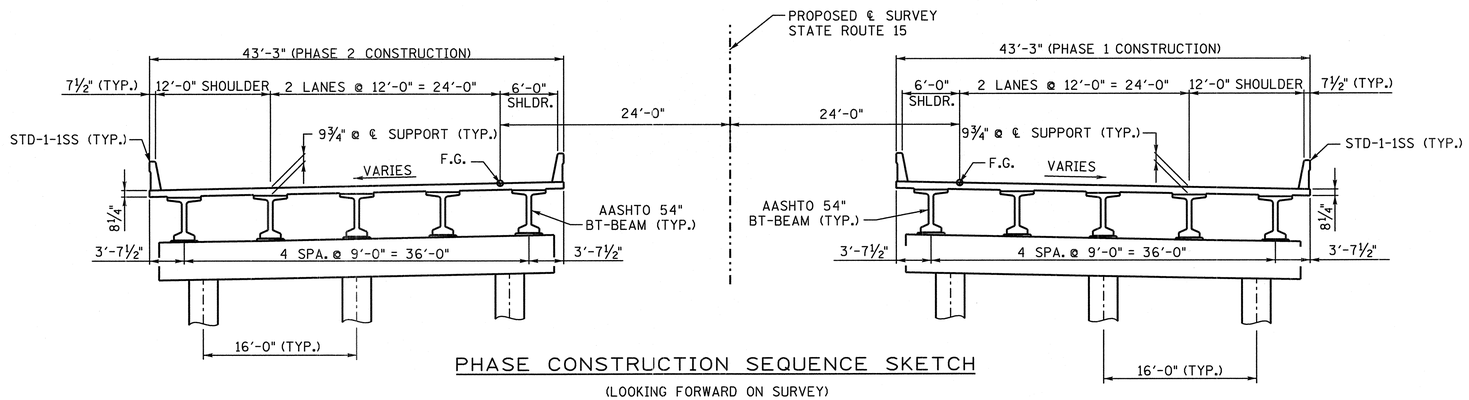

PHASE CONSTRUCTION SEQUENCE SKETCH

(LOOKING FORWARD ON SURVEY)

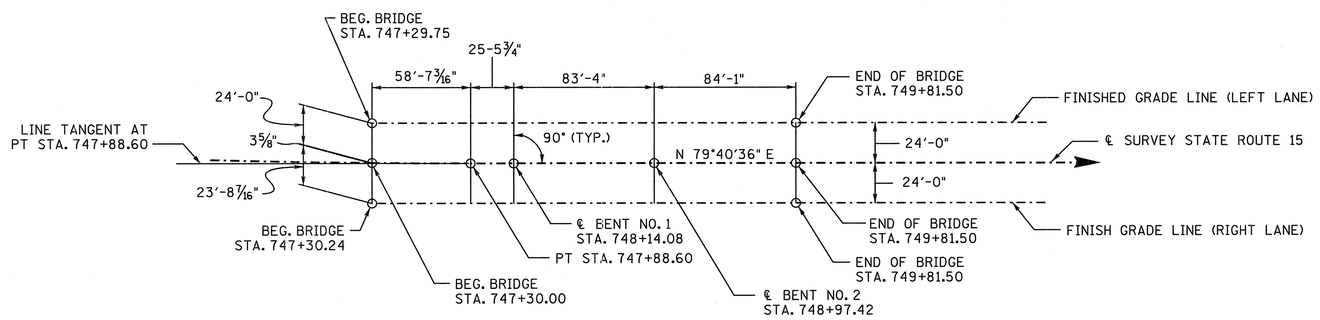

STAKE-OUT PLAN

DESIGNED BY	D. SHIKE	DATE	09-10
DRAWN BY	BILL EASTON	DATE	07-11
SUPERVISED BY	MBC / KDM	DATE	07-11
CHECKED BY	DJS	DATE	01-12

D:\Dgn\Sup\SUP1021.dgn
11-JAN-2012
10:41

CORRECT Wayne A. Sepe
ENGINEER OF STRUCTURES

KATHLEEN D. McLAUGHLIN
REGISTERED ENGINEER
No. 101101
STATE OF TENNESSEE
1/6/2012

BRIDGE NO. 2

STATE OF TENNESSEE
DEPARTMENT OF TRANSPORTATION

SUPERSTRUCTURE DETAILS
(LEFT AND RIGHT LANES)
STATE ROUTE 15
OVER
BIGBEE BRANCH
STATION 748+55.75
LOG MILE 20.85
HARDIN COUNTY
2012

U-52-119

SCR1021.DGN

BRIDGE SCREED TABLE OF STATIONS AND ELEVATIONS

PT.	STATION	ELEVATION	PT.	STATION	ELEVATION	PT.	STATION	ELEVATION	PT.	STATION	ELEVATION
1	747+06.27	483.24	35	747+89.51	480.02	69	748+55.75	477.04	103	749+30.20	474.59
2	747+06.84	484.36	36	747+89.49	480.04	70	748+55.75	477.00	104	749+30.20	474.52
3	747+18.23	482.78	37	747+89.49	480.27	71	748+64.08	477.17	105	749+30.20	473.80
4	747+18.72	483.77	38	747+89.48	480.29	72	748+64.08	477.12	106	749+30.20	473.73
5	747+30.19	482.32	39	747+97.70	479.70	73	748+64.08	476.63	107	749+38.40	474.28
6	747+30.60	483.18	40	747+97.69	479.72	74	748+64.08	476.58	108	749+38.40	474.21
7	747+32.31	482.21	41	747+97.69	479.87	75	748+72.42	476.85	109	749+38.40	473.49
8	747+32.33	482.28	42	747+97.68	479.88	76	748+72.42	476.79	110	749+38.40	473.41
9	747+32.68	483.04	43	748+05.90	479.39	77	748+72.42	476.22	111	749+46.59	473.97
10	747+32.70	483.11	44	748+05.88	479.40	78	748+72.42	476.17	112	749+46.59	473.90
11	747+40.48	481.89	45	748+05.88	479.47	79	748+80.75	476.53	113	749+46.59	473.18
12	747+40.50	481.96	46	748+05.87	479.48	80	748+80.75	476.46	114	749+46.59	473.11
13	747+40.80	482.64	47	748+14.09	479.08	81	748+80.75	475.82	115	749+54.79	473.67
14	747+40.81	482.71	48	748+14.08	479.08	82	748+80.75	475.75	116	749+54.79	473.60
15	747+48.65	481.58	49	748+14.08	479.07	83	748+89.09	476.21	117	749+54.79	472.88
16	747+48.66	481.64	50	748+14.07	479.07	84	748+89.09	476.14	118	749+54.79	472.80
17	747+48.91	482.24	51	748+22.41	478.76	85	748+89.09	475.42	119	749+62.98	473.37
18	747+48.92	482.31	52	748+22.41	478.75	86	748+89.09	475.34	120	749+62.98	473.30
19	747+56.82	481.27	53	748+22.41	478.66	87	748+97.42	475.88	121	749+62.98	472.58
20	747+56.83	481.32	54	748+22.41	478.65	88	748+97.42	475.80	122	749+62.98	472.50
21	747+57.03	481.85	55	748+30.75	478.44	89	748+97.42	475.08	123	749+71.18	473.07
22	747+57.03	481.90	56	748+30.75	478.42	90	748+97.42	475.01	124	749+71.18	473.00
23	747+64.99	480.96	57	748+30.75	478.26	91	749+05.62	475.55	125	749+71.18	472.28
24	747+64.99	481.00	58	748+30.75	478.24	92	749+05.62	475.48	126	749+71.18	472.21
25	747+65.14	481.45	59	748+39.08	478.12	93	749+05.62	474.76	127	749+79.38	472.78
26	747+65.14	481.50	60	748+39.08	478.10	94	749+05.62	474.68	128	749+79.38	472.71
27	747+73.16	480.64	61	748+39.08	477.85	95	749+13.81	475.23	129	749+79.38	471.99
28	747+73.16	480.68	62	748+39.08	477.82	96	749+13.81	475.15	130	749+79.38	471.91
29	747+73.26	481.06	63	748+47.42	477.80	97	749+13.81	474.43	131	749+81.50	472.67
30	747+73.25	481.10	64	748+47.42	477.77	98	749+13.81	474.36	132	749+81.50	471.87
31	747+81.33	480.33	65	748+47.42	477.44	99	749+22.01	474.91	133	749+93.50	472.26
32	747+81.32	480.36	66	748+47.42	477.41	100	749+22.01	474.83	134	749+93.50	471.45
33	747+81.37	480.66	67	748+55.75	477.48	101	749+22.01	474.11	135	750+05.50	471.84
34	747+81.36	480.69	68	748+55.75	477.44	102	749+22.01	474.04	136	750+05.50	471.04

CONST. NO. 36001-3290-14

PROJECT NO.	YEAR	SHEET NO.
NHE-15(108)	2012	

REVISIONS

NO.	DATE	BY	BRIEF DESCRIPTION

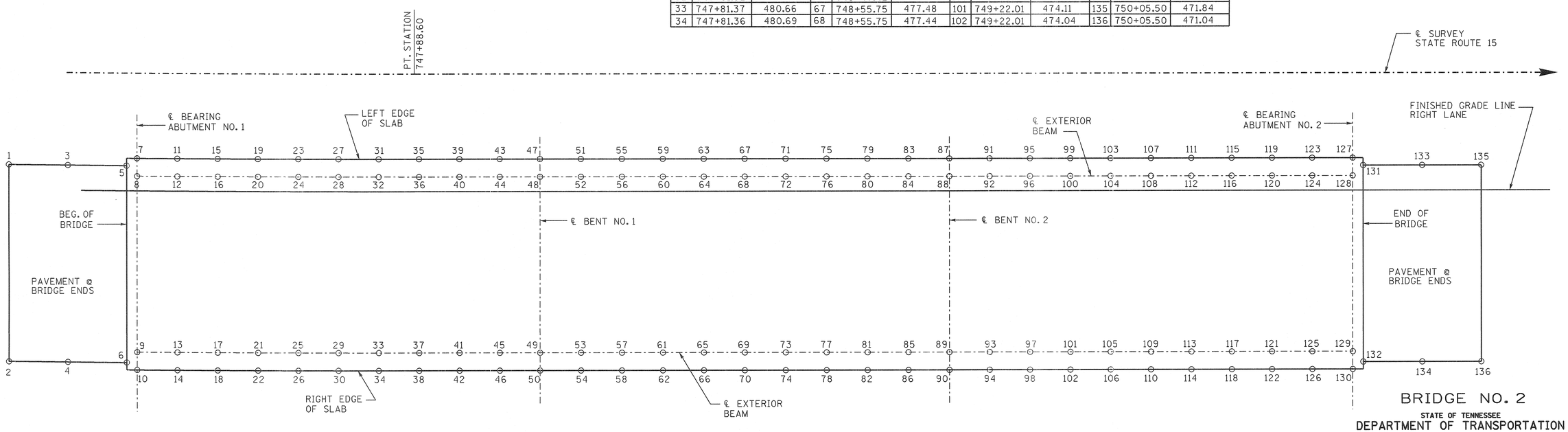

PLAN

BRIDGE NO. 2

STATE OF TENNESSEE
DEPARTMENT OF TRANSPORTATION

BRIDGE SCREED
STATE ROUTE 15
(RIGHT LANE)
OVER
BIGBEE BRANCH
STATION 748+55.75
LOG MILE 20.85
HARDIN COUNTY
2012

KATHLEEN D. McLAUGHLIN
REGISTERED ENGINEER
NO. 115254
STATE OF TENNESSEE
6/28/12

CORRECT Wayne G. Sieg
ENGINEER OF STRUCTURES

DESIGNED BY	D. SHIKE	DATE	9-10
DRAWN BY	P. MOSHER	DATE	9-11
SUPERVISED BY	MBC/KDM	DATE	9-11
CHECKED BY	DJS	DATE	1-12

D:\pmmosh\SCR\SCR1021.dgn
17-JAN-2012
11:39

U-52-120

TBM1021.DGN

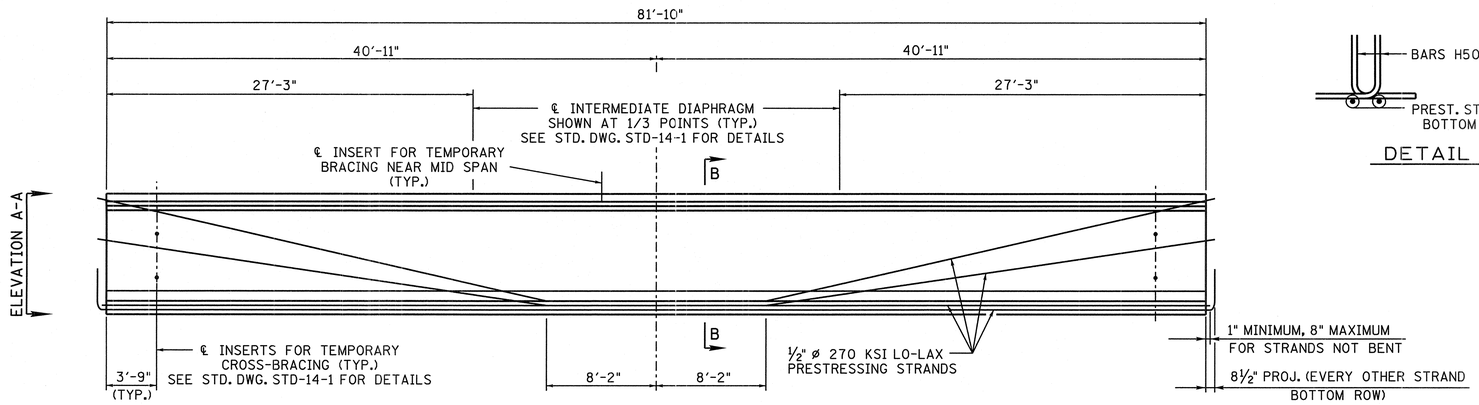

ELEVATION
(SHOWING PRESTRESSING STRANDS)

♦ DENOTES: 5 SPA. @ 3" = 1'-3"
▲ DENOTES: 5 SPA. @ 6" = 2'-6"
■ DENOTES: DOUBLE PROJECTING BARS H500 - 6 SPA. @ 8" = 4'-0"

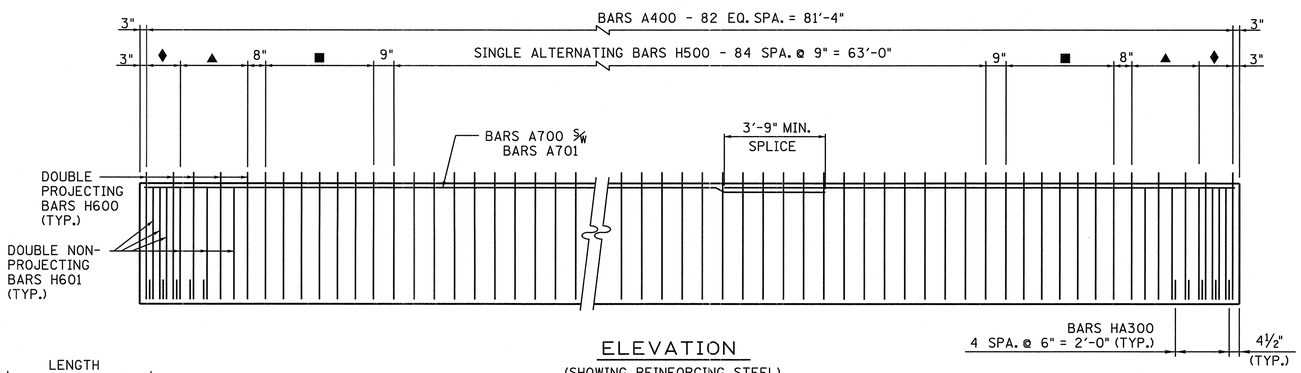

ELEVATION
(SHOWING REINFORCING STEEL)

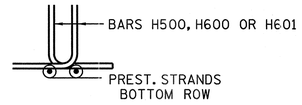

DETAIL "X"

BILL OF STEEL

(PER BEAM)

BAR	SIZE	NO. REQ'D	LENGTH
A400	4	83	3'-2"
A500	5	4	5'-6"
A700	7	6	60'-0"
A701	7	6	25'-3"
H500	5	113	6'-1"
H600	6	20	6'-1"
H601	6	24	5'-7"
HA300	3	10	4'-7"

CONST. NO. 36001-3290-14

PROJECT NO.	YEAR	SHEET NO.
NHE-15(108)	2012	

REVISIONS

NO.	DATE	BY	BRIEF DESCRIPTION

NOTES:

1. ALL BEAMS ARE BT-54.
2. SEE STD-14-1 FOR BULB-TEE BEAM STANDARD DETAILS AND NOTES.
3. THE CONCRETE FOR THIS CONSTRUCTION SHALL BE OF SUCH PROPERTIES AS TO ATTAIN A COMPRESSIVE STRENGTH OF NOT LESS THAN 6,000 PSI AT THE AGE OF 28 DAYS AND STRESS TRANSFER SHALL NOT BE MADE TO THE BRIDGE MEMBER UNTIL THE TEST SPECIMENS INDICATE THAT THE CONCRETE HAS REACHED A COMPRESSIVE STRENGTH OF AT LEAST 5,000 PSI. SEE GENERAL NOTES FOR CONCRETE FINISHING NOTE.
4. ALL PRESTRESSING STRANDS SHOWN ARE 270 KSI LO-LAX, HAVING A ½" ø, AN AREA OF 0.153 IN. AND A JACKING LOAD OF 31,000 LBS.
5. THE PRESTRESSED BEAMS SHALL ATTAIN AN AGE OF AT LEAST 90 DAYS PRIOR TO POURING THE SUPPORT DIAPHRAGMS (EXCLUDING BOTTOM 15 INCHES) AND DECK SLAB.

PRESTRESSED BEAM DESIGN DATA - PER BEAM

LIVE LOAD DISTRIBUTION FACTOR: MOMENT = 0.856 LANES
LIVE LOAD DISTRIBUTION FACTOR: SHEAR = 0.884 LANES
COMPOSITE DEAD LOAD: DC = 150 LB/FT
COMPOSITE DEAD LOAD: DW = 286 LB/FT
COMPOSITE SLAB DESIGN STRENGTH: f'c = 3000psi

NOTE: DOWNWARD DEFLECTION UNDER TOTAL DL IS NOT ALLOWED.

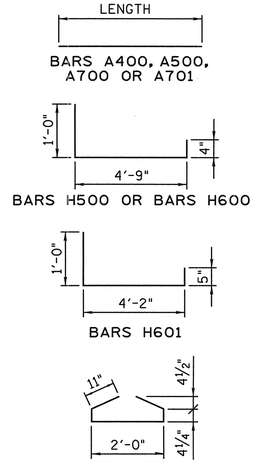

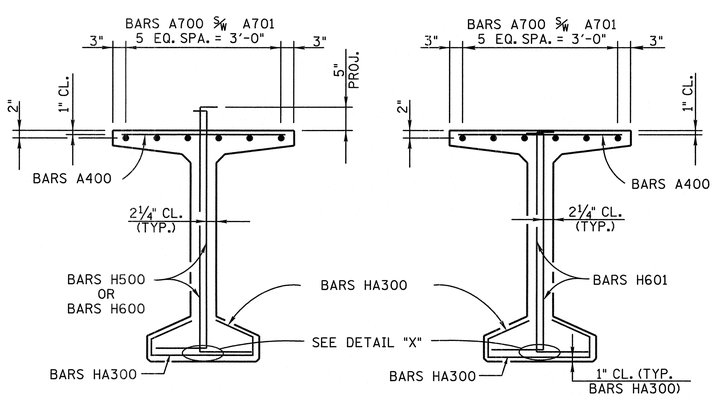

SHOWING PROJECTING BARS

SHOWING NON-PROJECTING BARS

SECTION B-B

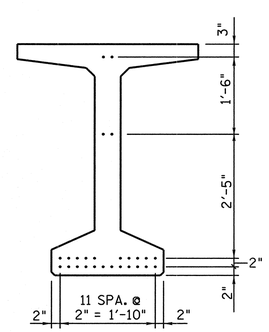

ELEVATION A-A
(SHOWING PRESTRESSING STRANDS)

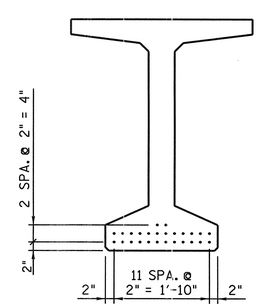

SECTION B-B
(SHOWING PRESTRESSING STRANDS)

KATHLEEN D. McLAUGHLIN
STATE OF TENNESSEE
6/28/12

ESTIMATED QUANTITIES

(PER BEAM)

NO. REQ'D	CLASS "A" CONCRETE C.Y.	REINFORCING STEEL LBS.	PRESTRESSING STRANDS (LOW RELAXATION) LBS.
30	14	2,362	1,149

BRIDGE NO. 2
STATE OF TENNESSEE
DEPARTMENT OF TRANSPORTATION

PRESTRESSED BULB-T BEAM DETAILS (LEFT AND RIGHT LANE) STATE ROUTE 15 OVER BIGBEE BRANCH STATION 748+55.75 LOG MILE 20.85 HARDIN COUNTY 2012

DESIGNED BY	D. SHIKE	DATE	09-10
DRAWN BY	BILL EASTON	DATE	10-11
SUPERVISED BY	M.B.C. / K. D. M.	DATE	10-11
CHECKED BY	DJS	DATE	01-12

CORRECT Dwayne J. Segers
ENGINEER OF STRUCTURES

U-52-121

D:\Dgn\Tbm\tbm1021.dgn
10:16:12 2012

ABT1021.DGN

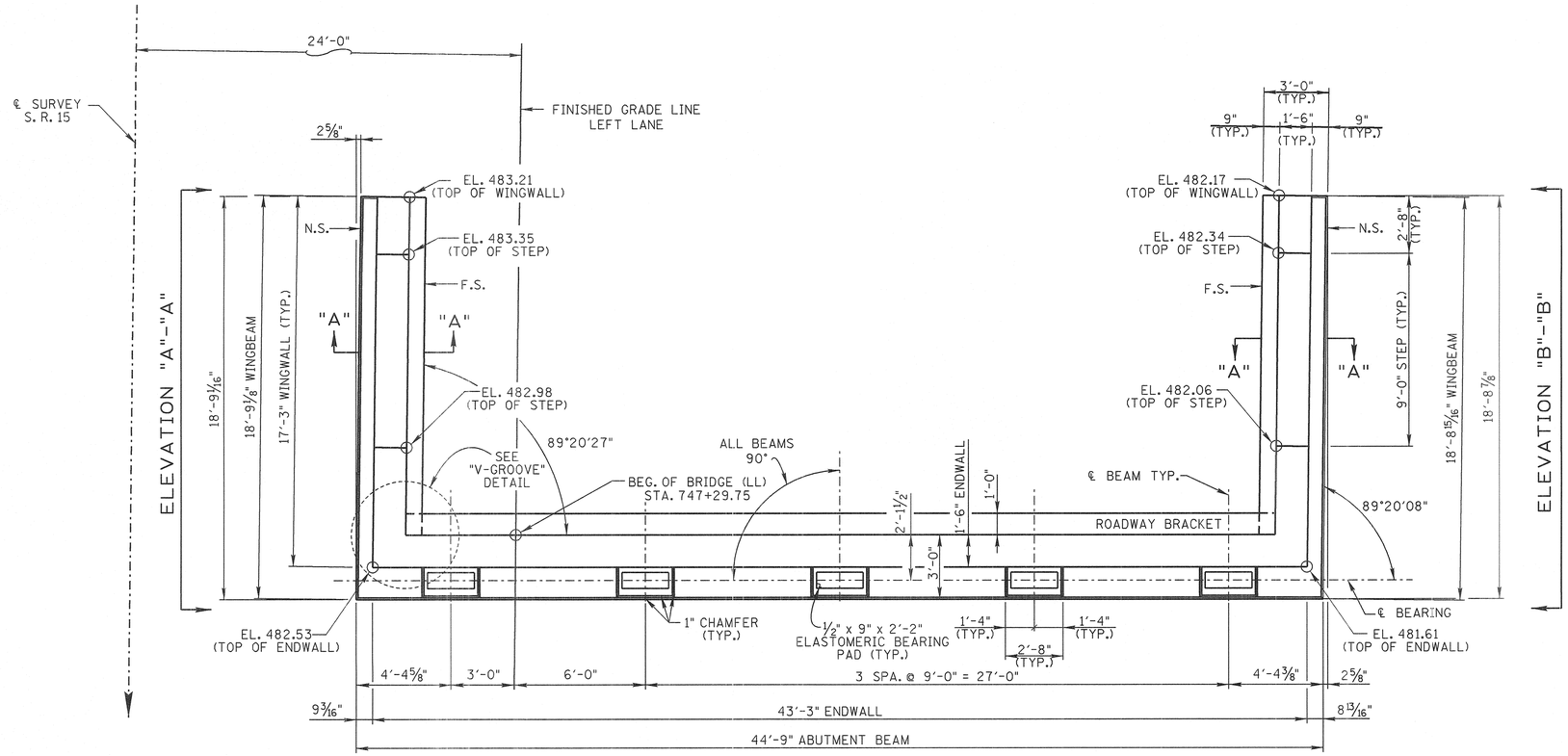

PLAN

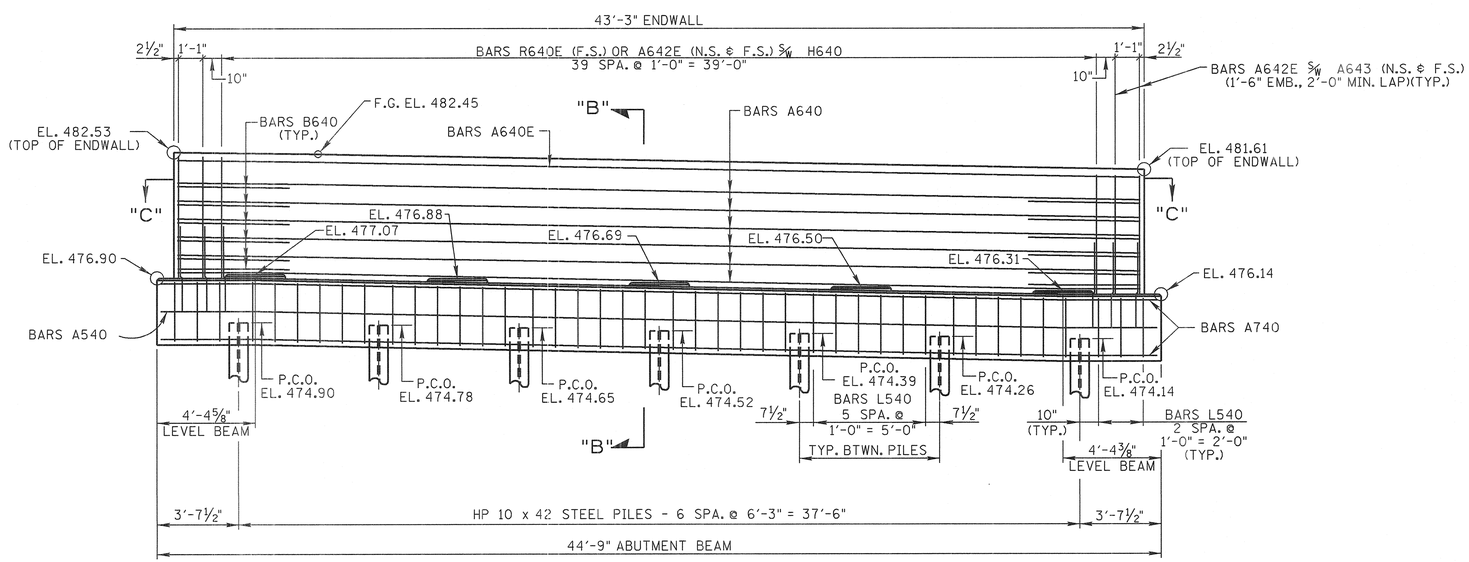

ELEVATION
(LOOKING BACK ON ℄ SURVEY)

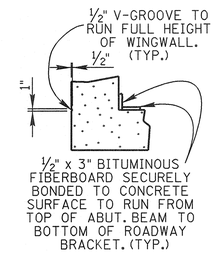

"V-GROOVE" DETAIL

DIRECTION OF SURVEY

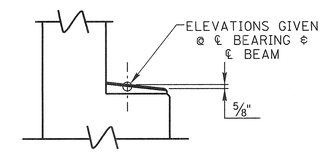

RISER BLOCK SLOPE DETAIL
(TYP. EACH RISER BLOCK)

CONST. NO. 36001-3290-14

PROJECT NO.	YEAR	SHEET NO.
NHE-15(108)	2012	

REVISIONS

NO.	DATE	BY	BRIEF DESCRIPTION

ABUTMENT GENERAL NOTES

NOTE: RISER BLOCKS SHALL BE POURED MONOLITHICALLY WITH THE ABUTMENT BEAM.

NOTE: NOT LESS THAN HALF OF THE SLAB IN THE END SPAN SHALL BE POURED PRIOR TO, OR CONCURRENTLY WITH, PLACEMENT OF ANY PART OF THE ABUTMENT BACKWALL. AT LEAST THE TOP 12 INCHES OF THE BACKWALL SHALL BE POURED CONCURRENTLY WITH THE END OF SLAB.

NOTE: COST OF BRIDGE RAIL AND POST IS TO BE INCLUDED IN THE UNIT PRICE BID FOR THE BRIDGE RAIL SYSTEM.

NOTE: ELASTOMERIC PADS SHALL BE IN PLACE A MINIMUM OF ONE DAY BEFORE BEING DISTURBED BY SETTING BEAMS. PLACE RUBBER BONDING CEMENT IN SUCH A WAY THAT VISIBLE CONCRETE SURFACES WILL NOT BE STAINED.

NOTE: WHEN POURING WINGWALLS, PROVISIONS SHALL BE MADE FOR SETTING REINFORCING STEEL FOR WINGPOSTS AND PARAPET. FOR DETAILS OF WINGPOSTS AND PARAPET SEE STD. DWG. NO. STD-1-1SS.

NOTE: WINGBEAM PILES SHALL BE DRIVEN TO PLANS TIP ELEVATION OR REFUSAL. SEISMIC ATTACHMENT IS NOT REQUIRED FOR ANY PILES.

NOTE: RISER BLOCKS BEARING PAD SURFACES TO CONFORM TO BOTTOM OF BEAM GRADE.

ESTIMATED QUANTITIES

CLASS 'A' CONCRETE (BRIDGES) C.Y.	STEEL BAR REINFORCEMENT (BRIDGES) LB.	EPOXY COATED REINFORCING STEEL LB.
51	5,670	1,608

BRIDGE NO. 2

STATE OF TENNESSEE
DEPARTMENT OF TRANSPORTATION
ABUTMENT NO. 1
LEFT LANE
STATE ROUTE 15
OVER
BIGBEE BRANCH
STATION 748+55.75
LOG MILE 20.85
HARDIN COUNTY
2012

KATHLEEN D. McLAUGHLIN REGISTERED ENGINEER LIC. 101255 STATE OF TENNESSEE 6/28/12

CORRECT Wayne G. Sexton
ENGINEER OF STRUCTURES

DESIGNED BY	D. SHIKE	DATE	10-11
DRAWN BY	ANGELA HUNTER	DATE	10-11
SUPERVISED BY	M.B.C./K.D.M.	DATE	10-11
CHECKED BY	D.J.S.	DATE	01-12

D:\dgn\Abt\ABT1021.dgn
10:06 AM-2012

U-52-122

ABT1021.DGN

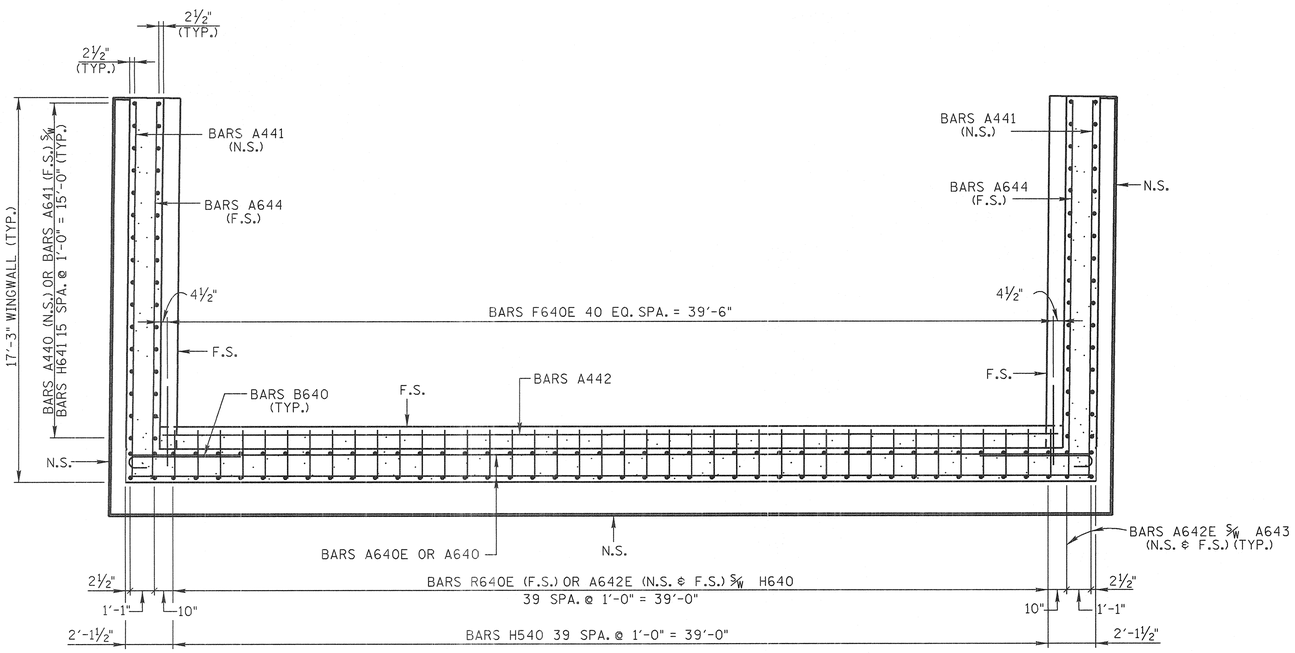

SECTION "C"-"C"

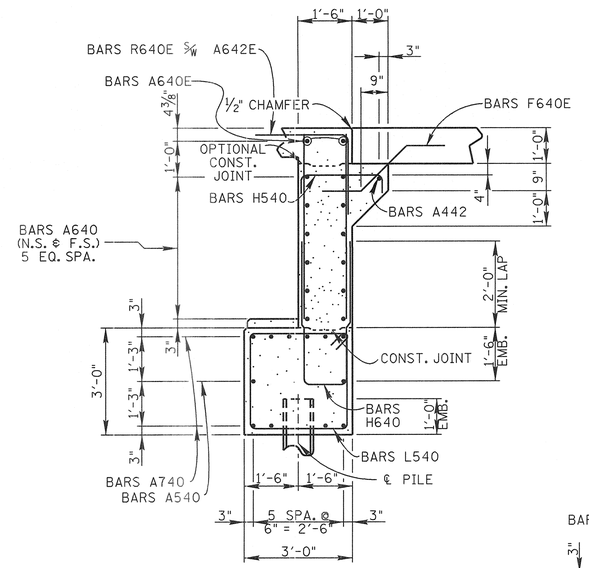

SECTION "B"-"B"

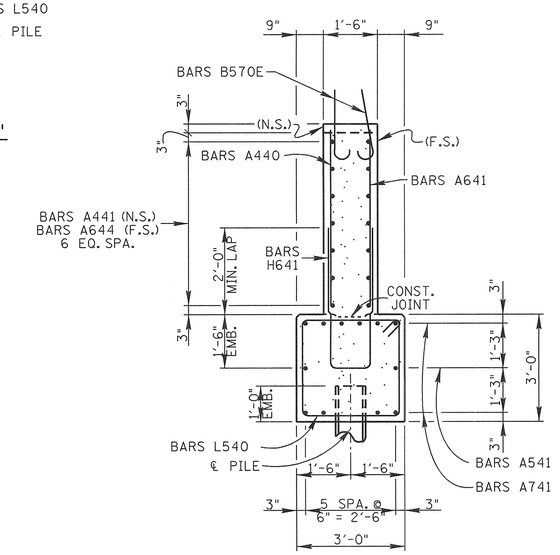

SECTION "A"-"A"

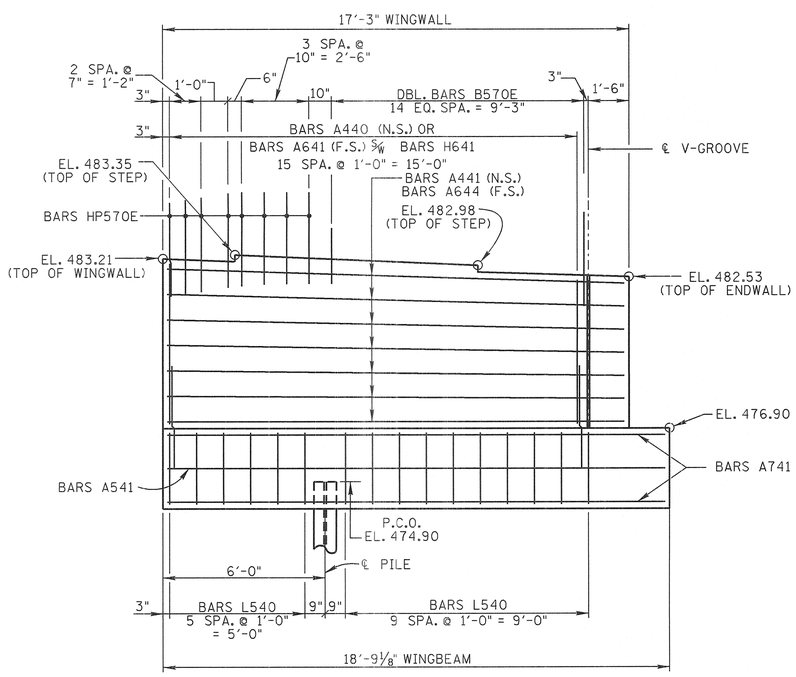

ELEVATION "A"-"A"

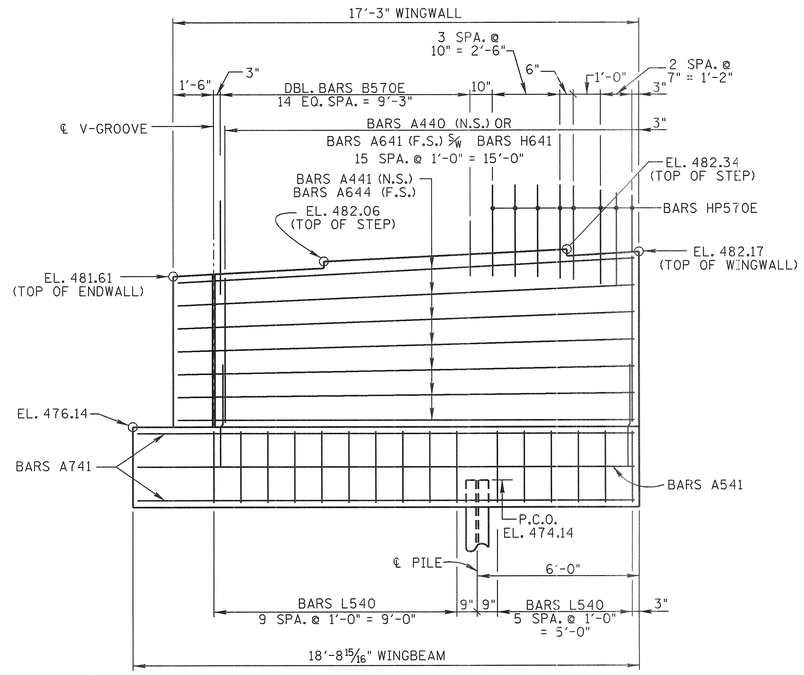

ELEVATION "B"-"B"

CONST. NO. 36001-3290-14

PROJECT NO.	YEAR	SHEET NO.
NHE-15(108)	2012	

REVISIONS

NO.	DATE	BY	BRIEF DESCRIPTION

BRIDGE NO. 2

STATE OF TENNESSEE
DEPARTMENT OF TRANSPORTATION
ABUTMENT NO. 1 DETAILS
LEFT LANE
STATE ROUTE 15
OVER
BIGBEE BRANCH
STATION 748+55.75
LOG MILE 20.85
HARDIN COUNTY
2012

KATHLEEN D. McLAUGHLIN — STATE OF TENNESSEE — 01/23/12

CORRECT Wayne G. Sieger
ENGINEER OF STRUCTURES

DESIGNED BY	D. SHIKE	DATE	10-11
DRAWN BY	ANGELA HUNTER	DATE	10-11
SUPERVISED BY	M.B.C./K.D.M.	DATE	10-11
CHECKED BY	D.J.S.	DATE	01-12

Dgn\Abt\ABT1021.dgn
JAN-2012
10:16

U-52-123

ABT1021.DGN

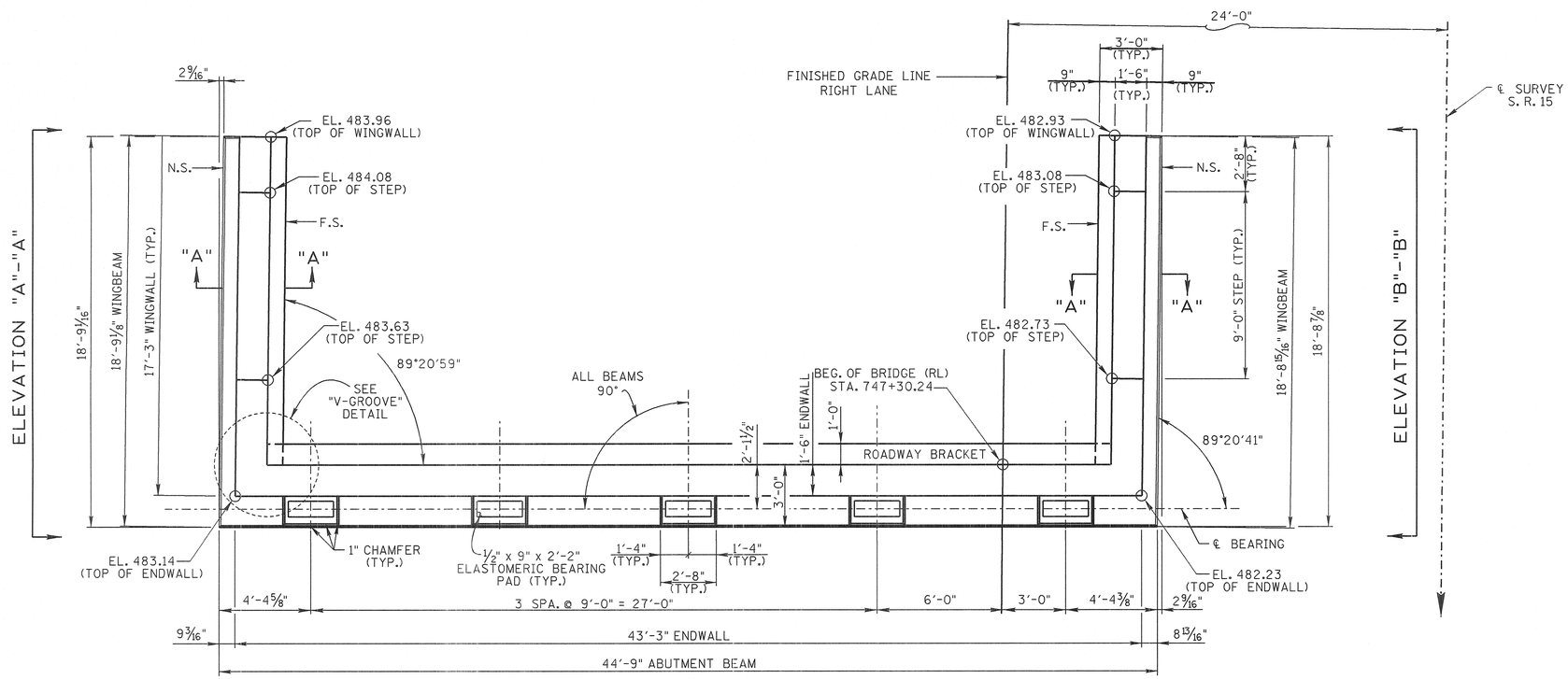

PLAN

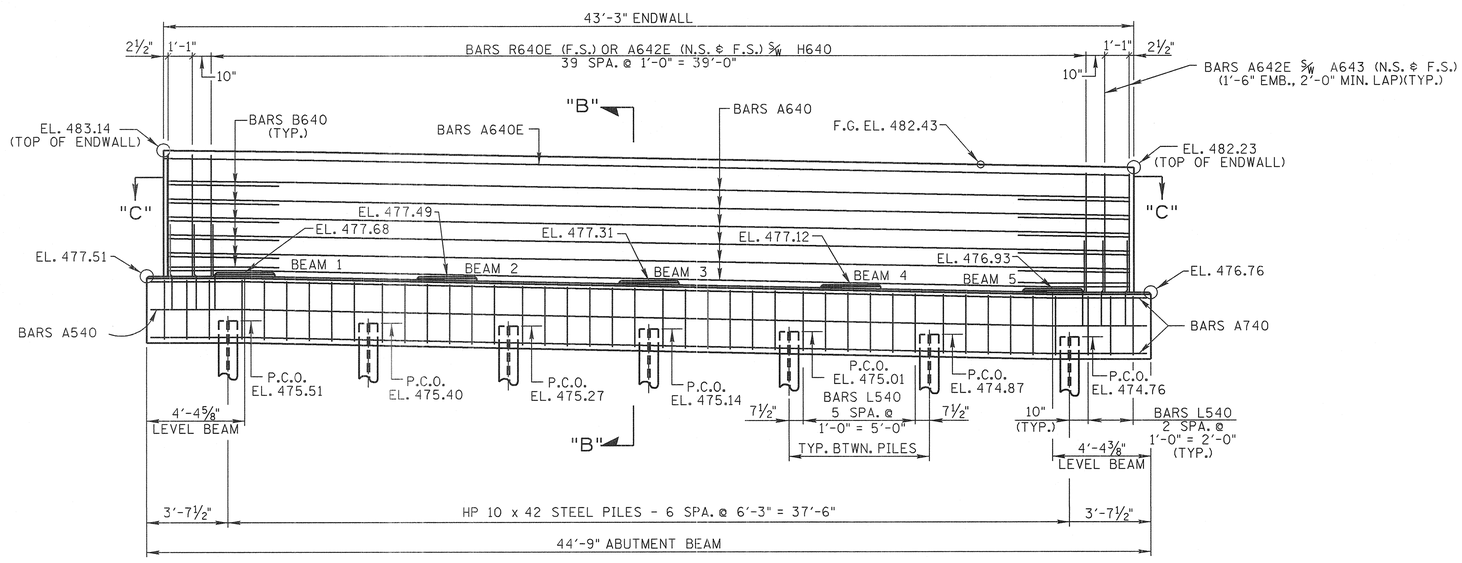

ELEVATION
(LOOKING BACK ON ℄ SURVEY)

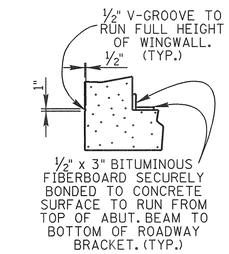

"V-GROOVE" DETAIL

DIRECTION OF SURVEY

TABLE OF DIMENSIONS

	"A"
BEAMS 1 & 2	3/4"
BEAMS 3 & 4	11/16"
BEAM 5	5/8"

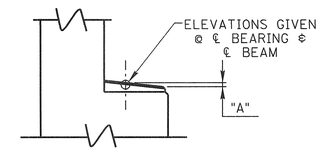

RISER BLOCK SLOPE DETAIL
(TYP. EACH RISER BLOCK)

ABUTMENT GENERAL NOTES

NOTE: RISER BLOCKS SHALL BE POURED MONOLITHICALLY WITH THE ABUTMENT BEAM.

NOTE: NOT LESS THAN HALF OF THE SLAB IN THE END SPAN SHALL BE POURED PRIOR TO, OR CONCURRENTLY WITH, PLACEMENT OF ANY PART OF THE ABUTMENT BACKWALL. AT LEAST THE TOP 12 INCHES OF THE BACKWALL SHALL BE POURED CONCURRENTLY WITH THE END OF SLAB.

NOTE: COST OF BRIDGE RAIL AND POST IS TO BE INCLUDED IN THE UNIT PRICE BID FOR THE BRIDGE RAIL SYSTEM.

NOTE: ELASTOMERIC PADS SHALL BE IN PLACE A MINIMUM OF ONE DAY BEFORE BEING DISTURBED BY SETTING BEAMS. PLACE RUBBER BONDING CEMENT IN SUCH A WAY THAT VISIBLE CONCRETE SURFACES WILL NOT BE STAINED.

NOTE: WHEN POURING WINGWALLS, PROVISIONS SHALL BE MADE FOR SETTING REINFORCING STEEL FOR WINGPOSTS AND PARAPET. FOR DETAILS OF WINGPOSTS AND PARAPET SEE STD. DWG. NO. STD-1-1SS.

NOTE: WINGBEAM PILES SHALL BE DRIVEN TO PLANS TIP ELEVATION OR REFUSAL. SEISMIC ATTACHMENT IS NOT REQUIRED FOR ANY PILES.

NOTE: RISER BLOCKS BEARING PAD SURFACES TO CONFORM TO BOTTOM OF BEAM GRADE.

ESTIMATED QUANTITIES

CLASS 'A' CONCRETE (BRIDGES) C.Y.	STEEL BAR REINFORCEMENT (BRIDGES) LB.	EPOXY COATED REINFORCING STEEL LB.
51	5,670	1,608

CONST. NO. 36001-3290-14

PROJECT NO.	YEAR	SHEET NO.
NHE-15(108)	2012	

REVISIONS

NO.	DATE	BY	BRIEF DESCRIPTION

BRIDGE NO. 2

STATE OF TENNESSEE
DEPARTMENT OF TRANSPORTATION

ABUTMENT NO. 1
RIGHT LANE
STATE ROUTE 15
OVER
BIGBEE BRANCH
STATION 748+55.75
LOG MILE 20.85
HARDIN COUNTY
2012

KATHLEEN D. McLAUGHLIN REGISTERED ENGINEER NO. 115251 STATE OF TENNESSEE 1/28/12

CORRECT Wayne G. Sieger
ENGINEER OF STRUCTURES

DESIGNED BY	D. SHIKE	DATE	10-11
DRAWN BY	ANGELA HUNTER	DATE	10-11
SUPERVISED BY	M.B.C./K.D.M.	DATE	10-11
CHECKED BY	D.J.S.	DATE	01-12

D:\dgn\Abt\ABT1021.dgn
10:28 AM-2012

U-52-124

ABT1021.DGN

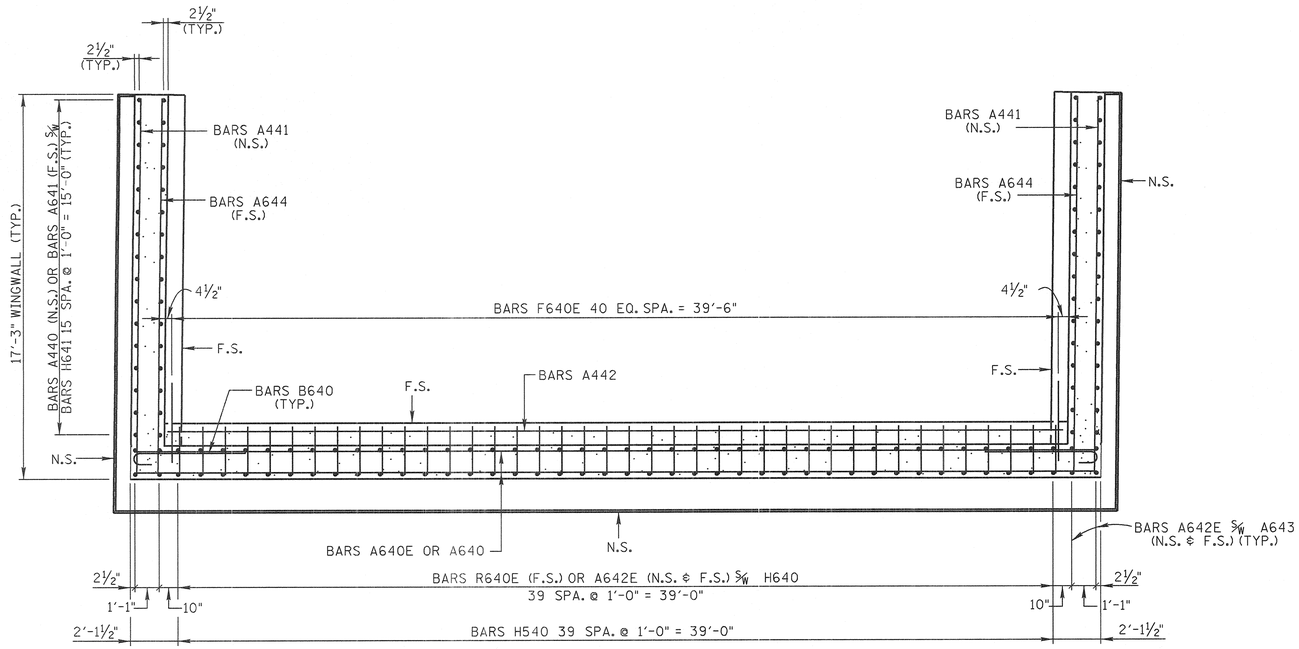

SECTION "C"-"C"

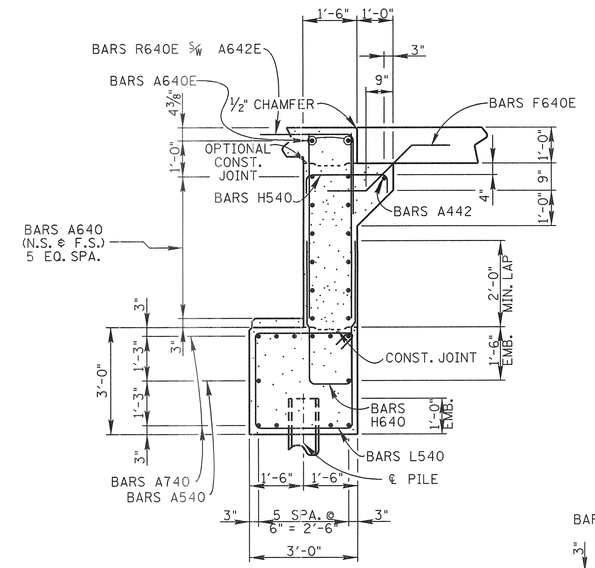

SECTION "B"-"B"

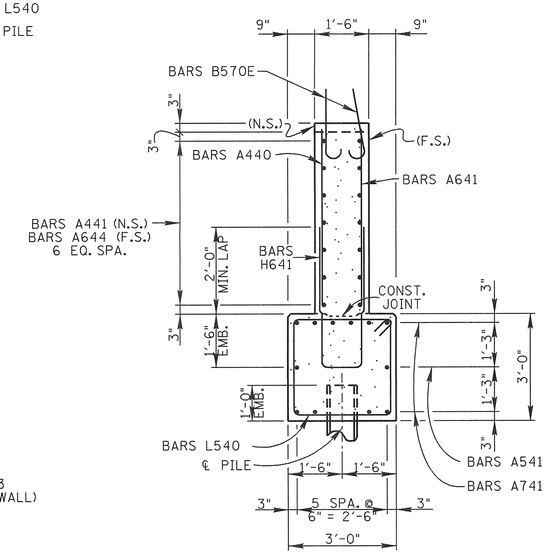

SECTION "A"-"A"

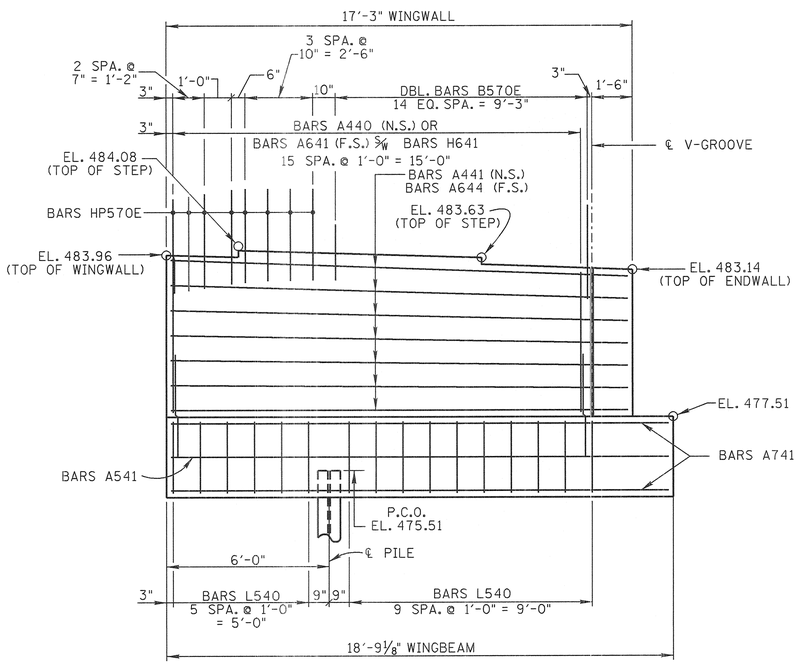

ELEVATION "A"-"A"

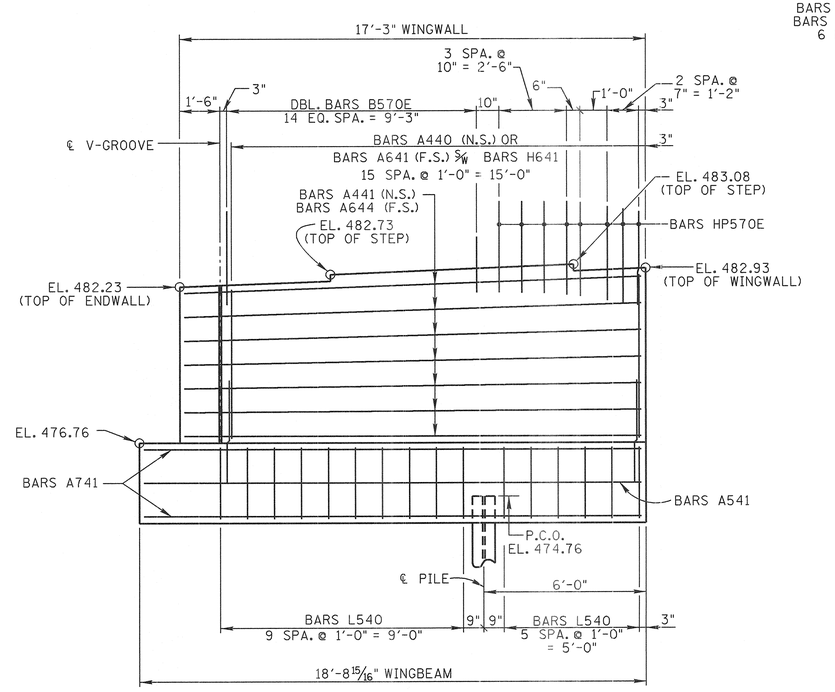

ELEVATION "B"-"B"

CONST. NO. 36001-3290-14

PROJECT NO.	YEAR	SHEET NO.
NHE-15(108)	2012	

REVISIONS

NO.	DATE	BY	BRIEF DESCRIPTION

BRIDGE NO. 2

STATE OF TENNESSEE
DEPARTMENT OF TRANSPORTATION

ABUTMENT NO. 1 DETAILS
RIGHT LANE
STATE ROUTE 15
OVER
BIGBEE BRANCH
STATION 748+55.75
LOG MILE 20.85
HARDIN COUNTY
2012

KATHLEEN D. McLAUGHLIN — STATE OF TENNESSEE — REGISTERED PROFESSIONAL ENGINEER — No. 101251 — 6/28/12

CORRECT Wayne G. Seger
ENGINEER OF STRUCTURES

U-52-125

DESIGNED BY	D. SHIKE	DATE	10-11
DRAWN BY	ANGELA HUNTER	DATE	10-11
SUPERVISED BY	M.B.C./K.D.M.	DATE	10-11
CHECKED BY	D.J.S.	DATE	01-12

D:\dgn\Abt\ABT1021.dgn
10:08 JAN-2012

ABT1021.DGN

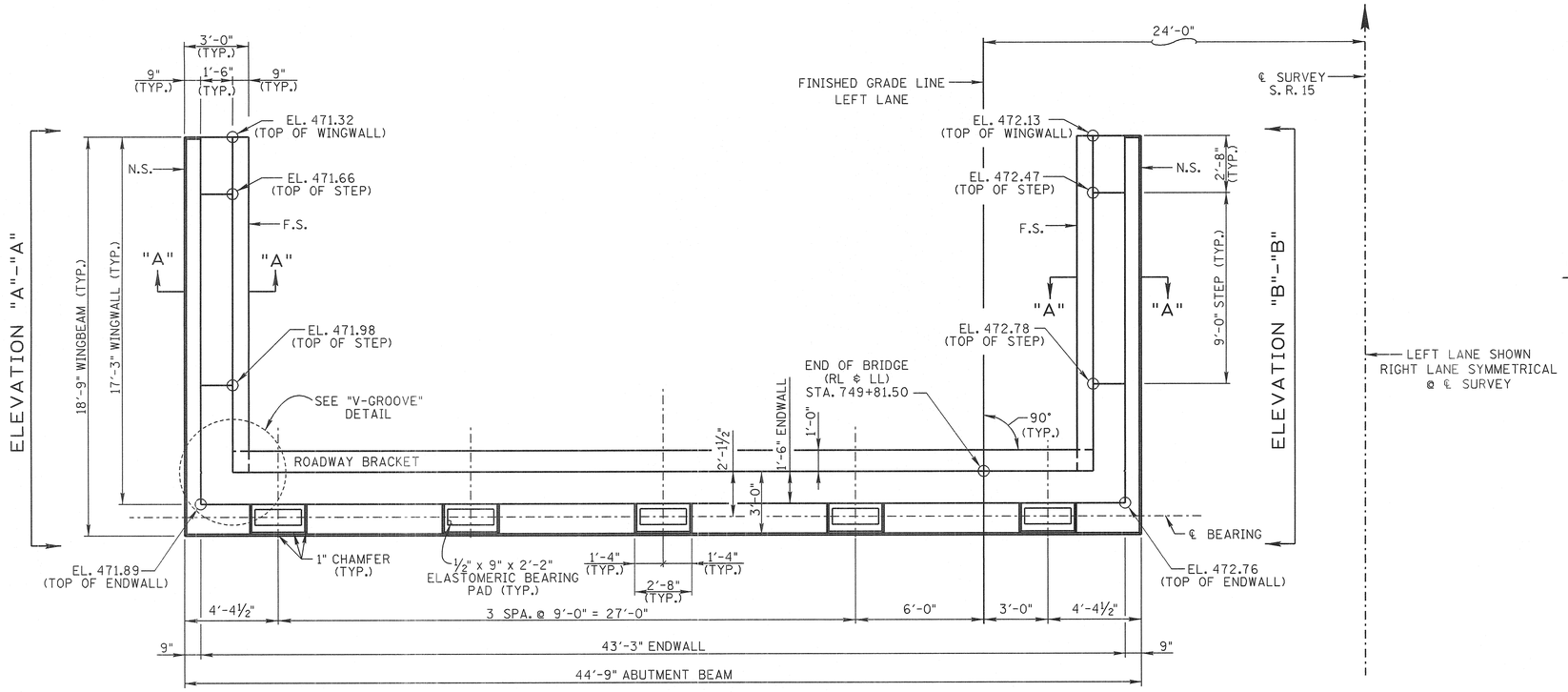

PLAN

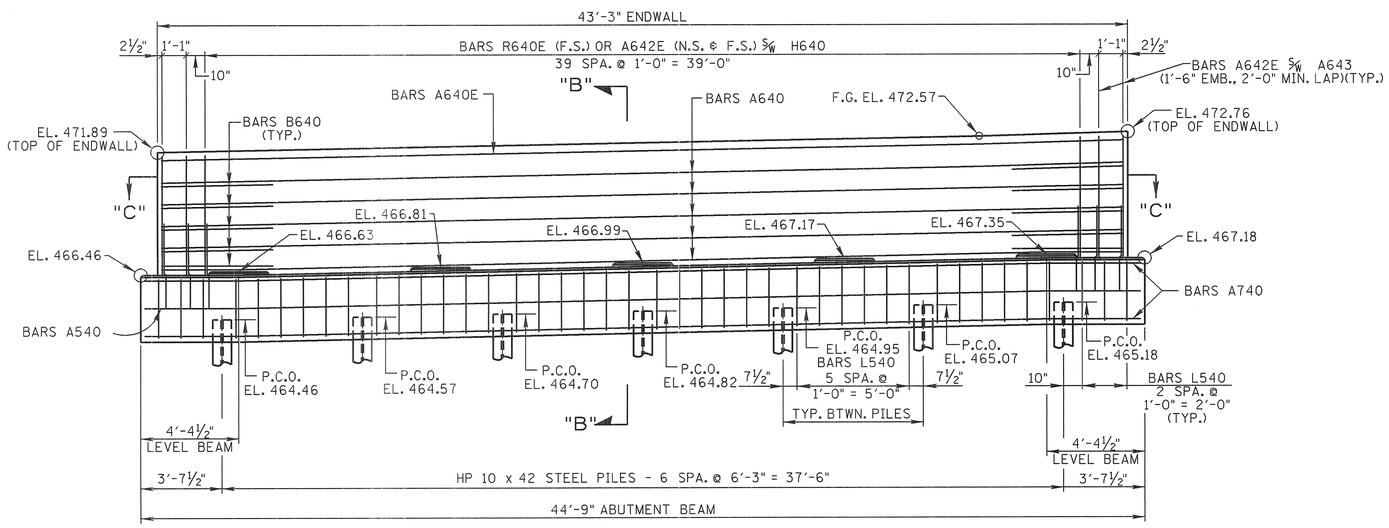

ELEVATION
(LOOKING FORWARD ON ℄ SURVEY)

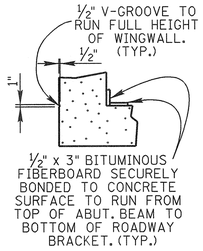

"V-GROOVE" DETAIL

DIRECTION OF SURVEY

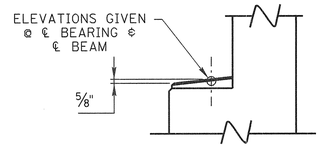

RISER BLOCK SLOPE DETAIL
(TYP. EACH RISER BLOCK)

ABUTMENT GENERAL NOTES

NOTE: RISER BLOCKS SHALL BE POURED MONOLITHICALLY WITH THE ABUTMENT BEAM.

NOTE: NOT LESS THAN HALF OF THE SLAB IN THE END SPAN SHALL BE POURED PRIOR TO, OR CONCURRENTLY WITH, PLACEMENT OF ANY PART OF THE ABUTMENT BACKWALL. AT LEAST THE TOP 12 INCHES OF THE BACKWALL SHALL BE POURED CONCURRENTLY WITH THE END OF SLAB.

NOTE: COST OF BRIDGE RAIL AND POST IS TO BE INCLUDED IN THE UNIT PRICE BID FOR THE BRIDGE RAIL SYSTEM.

NOTE: ELASTOMERIC PADS SHALL BE IN PLACE A MINIMUM OF ONE DAY BEFORE BEING DISTURBED BY SETTING BEAMS. PLACE RUBBER BONDING CEMENT IN SUCH A WAY THAT VISIBLE CONCRETE SURFACES WILL NOT BE STAINED.

NOTE: WHEN POURING WINGWALLS, PROVISIONS SHALL BE MADE FOR SETTING REINFORCING STEEL FOR WINGPOSTS AND PARAPET. FOR DETAILS OF WINGPOSTS AND PARAPET SEE STD. DWG. NO. STD-1-1SS.

NOTE: WINGBEAM PILES SHALL BE DRIVEN TO PLANS TIP ELEVATION OR REFUSAL. SEISMIC ATTACHMENT IS NOT REQUIRED FOR ANY PILES.

NOTE: RISER BLOCKS BEARING PAD SURFACES TO CONFORM TO BOTTOM OF BEAM GRADE.

ESTIMATED QUANTITIES

CLASS 'A' CONCRETE (BRIDGES) C.Y.	STEEL BAR REINFORCEMENT (BRIDGES) LB.	EPOXY COATED REINFORCING STEEL LB.
50	5,405	1,608

CONST. NO. 36001-3290-14

PROJECT NO.	YEAR	SHEET NO.
NHE-15(108)	2012	

REVISIONS

NO.	DATE	BY	BRIEF DESCRIPTION

BRIDGE NO. 2

STATE OF TENNESSEE
DEPARTMENT OF TRANSPORTATION

ABUTMENT NO. 2
LEFT LANE & RIGHT LANE
STATE ROUTE 15
OVER
BIGBEE BRANCH
STATION 748+55.75
LOG MILE 20.85
HARDIN COUNTY
2012

KATHLEEN D. McLAUGHLIN
REGISTERED ENGINEER
No. 112000
STATE OF TENNESSEE
6/28/12

CORRECT Wayne G. Sieger
ENGINEER OF STRUCTURES

U-52-126

DESIGNED BY	D. SHIKE	DATE	10-11
DRAWN BY	ANGELA HUNTER	DATE	10-11
SUPERVISED BY	M.B.C./K.D.M.	DATE	10-11
CHECKED BY	D.J.S.	DATE	01-12

D:\dgn\Abt\ABT1021.dgn
10:41 AM-2012

ABT1021.DGN

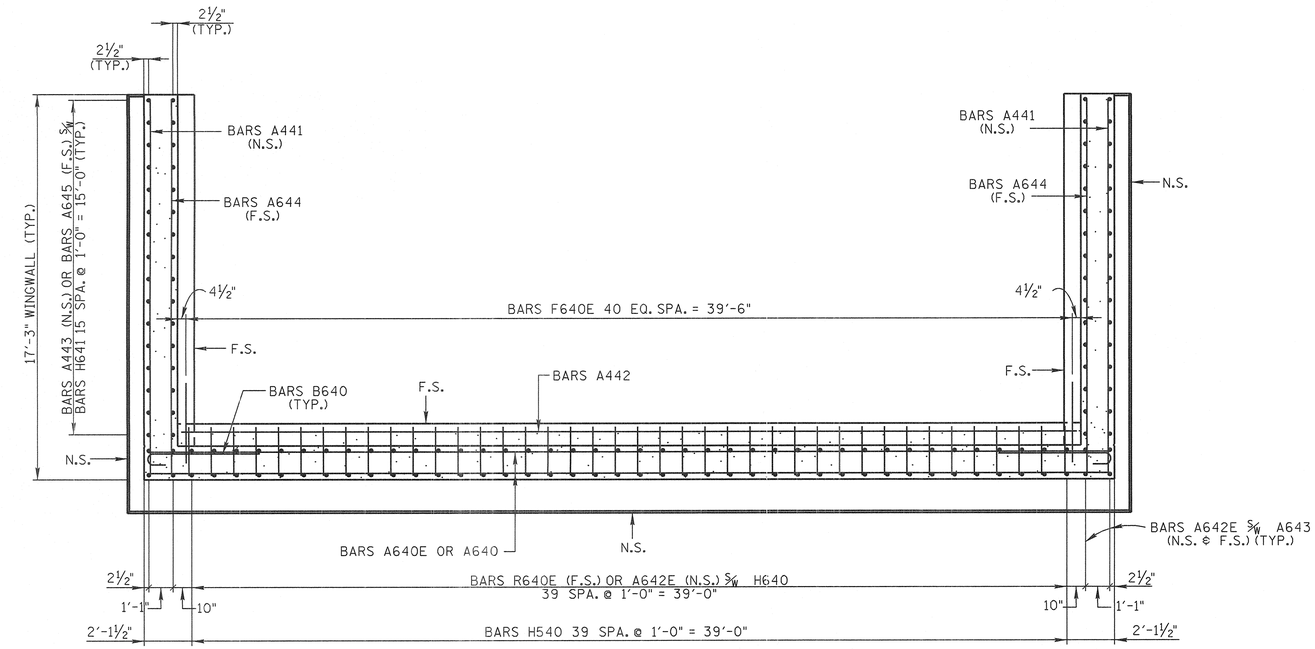

SECTION "C"-"C"

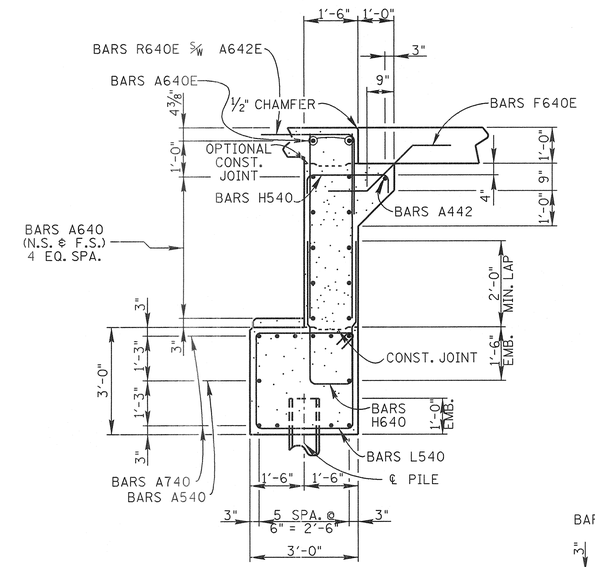

SECTION "B"-"B"

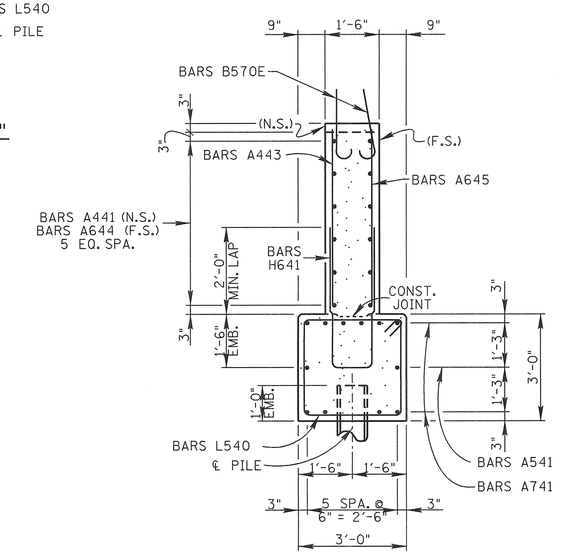

SECTION "A"-"A"

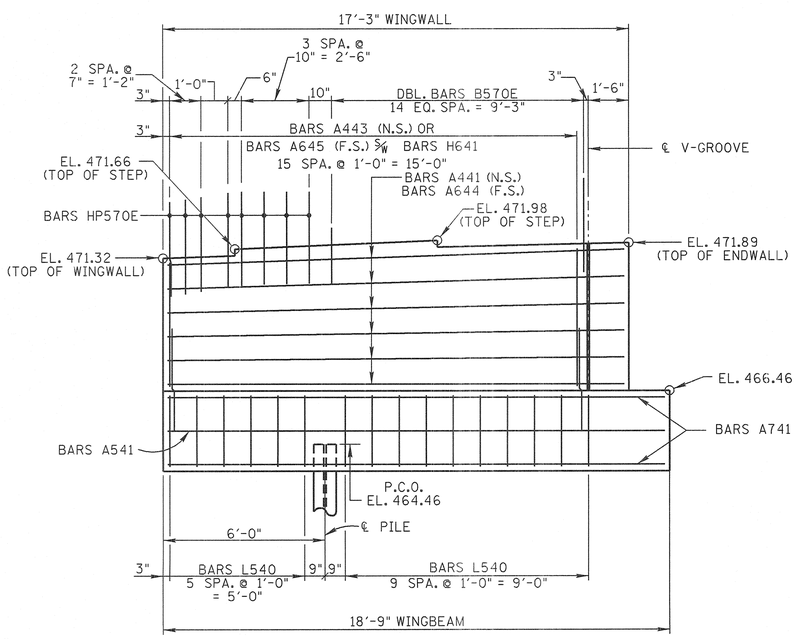

ELEVATION "A"-"A"

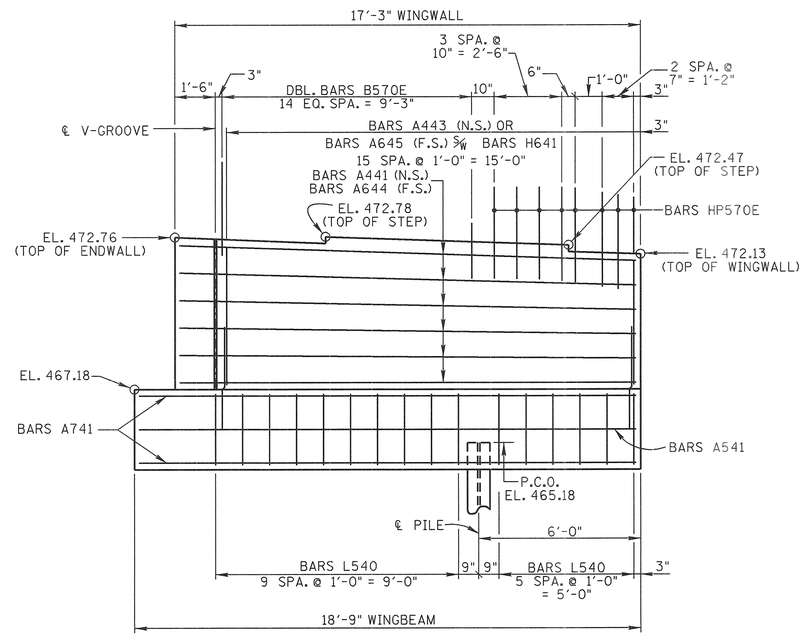

ELEVATION "B"-"B"

CONST. NO. 36001-3290-14

PROJECT NO.	YEAR	SHEET NO.
NHE-15(108)	2012	

REVISIONS

NO.	DATE	BY	BRIEF DESCRIPTION

BRIDGE NO. 2

STATE OF TENNESSEE
DEPARTMENT OF TRANSPORTATION

ABUTMENT NO. 2 DETAILS
LEFT LANE & RIGHT LANE
STATE ROUTE 15
OVER
BIGBEE BRANCH
STATION 748+55.75
LOG MILE 20.85
HARDIN COUNTY
2012

KATHLEEN D. McLAUGHLIN REGISTERED ENGINEER STATE OF TENNESSEE 1/26/12

CORRECT Wayne G. Sieger
ENGINEER OF STRUCTURES

U-52-127

DESIGNED BY D. SHIKE DATE 10-11
DRAWN BY ANGELA HUNTER DATE 10-11
SUPERVISED BY M.B.C./K.D.M. DATE 10-11
CHECKED BY D.J.S. DATE 01-12

D:\dgn\Abt\ABT1021.dgn
10:17 JAN-2012

BNT1021.DGN

CONST. NO. 36001-3290-14

PROJECT NO.	YEAR	SHEET NO.
NHE-15(108)	2012	

REVISIONS

NO.	DATE	BY	BRIEF DESCRIPTION

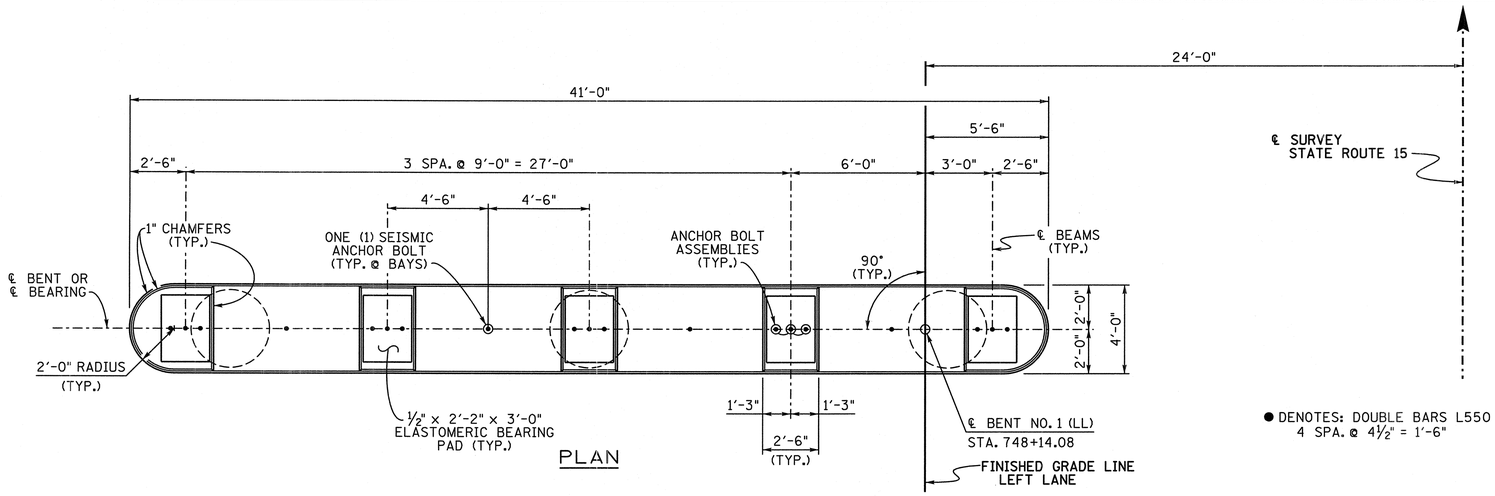

PLAN

● DENOTES: DOUBLE BARS L550
4 SPA. @ 4½" = 1'-6"

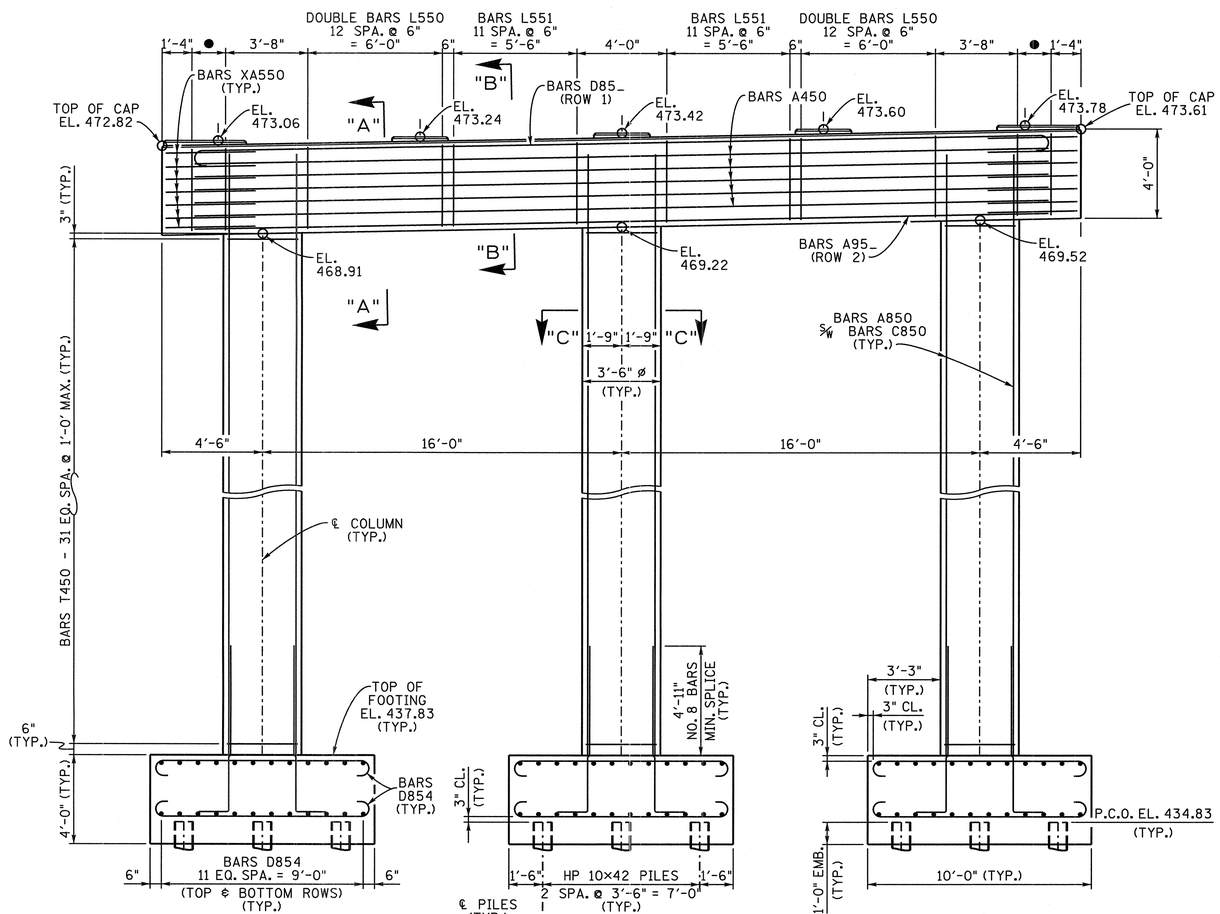

ELEVATION

(LOOKING FORWARD ON SURVEY)

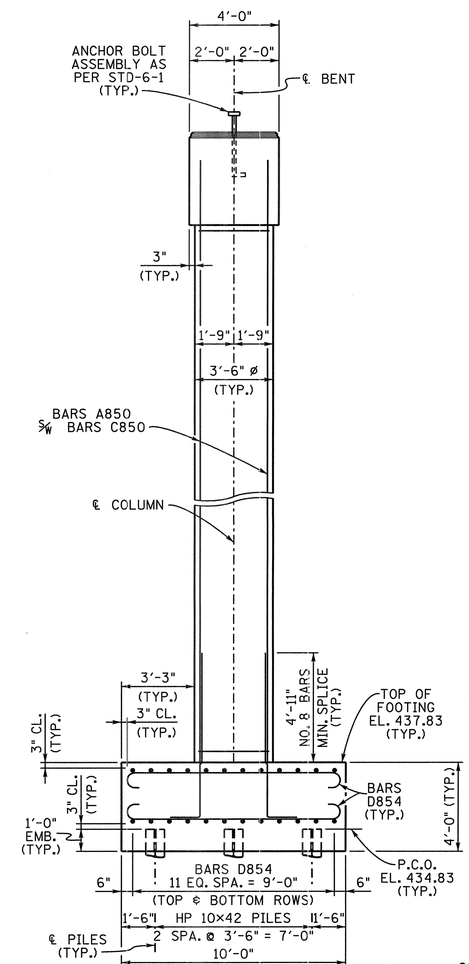

END ELEVATION

NOTE: WHEN POURING CAP BEAM, PROVISIONS SHALL BE MADE FOR SETTING ANCHOR BOLTS. SEE STANDARD DRAWING STD-6-1. BOLT PROJECTION 11".

NOTE: RISER BLOCKS TO BE POURED MONOLITHICALLY WITH CAP BEAM.

NOTE: ELASTOMERIC PADS SHALL BE IN PLACE A MINIMUM OF ONE DAY BEFORE BEING DISTURBED BY SETTING BEAMS. PLACE RUBBER BONDING CEMENT IN SUCH A WAY THAT VISIBLE CONCRETE SURFACES WILL NOT BE STAINED.

NOTE: RISER BLOCK BEARING SURFACE TO CONFORM TO BOTTOM OF BEAM GRADE.

NOTE: COLUMN STEEL TO EXTEND 2'-11" MIN. INTO CAP BEAM.

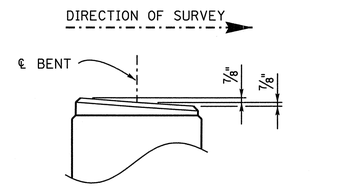

RISER BLOCK SLOPE DETAIL

(TYP. @ RISER BLOCKS)

ESTIMATED QUANTITIES

CLASS "A" CONCRETE (BRIDGES) C.Y.	STEEL BAR REINFORCEMENT (BRIDGES) LBS.
102	15,767

KATHLEEN D. McLAUGHLIN — STATE OF TENNESSEE — 101101 — 6/28/12

BRIDGE NO. 2

STATE OF TENNESSEE
DEPARTMENT OF TRANSPORTATION

BENT NO. 1
LEFT LANE
STATE ROUTE 15
OVER
BIGBEE BRANCH
STATION 748+55.75
LOG MILE 20.85
HARDIN COUNTY
2012

CORRECT Dwayne G. Tayer
ENGINEER OF STRUCTURES

DESIGNED BY	DAN SHIKE	DATE	10-11
DRAWN BY	T. WISEMAN	DATE	10-11
SUPERVISED BY	MBC / KDM	DATE	10-11
CHECKED BY	DAN SHIKE	DATE	01-12

DGN-Dgn\Bnt\bnt1021.dgn
Jun 26, 2012
14:05

U-52-128

BNT1021.DGN

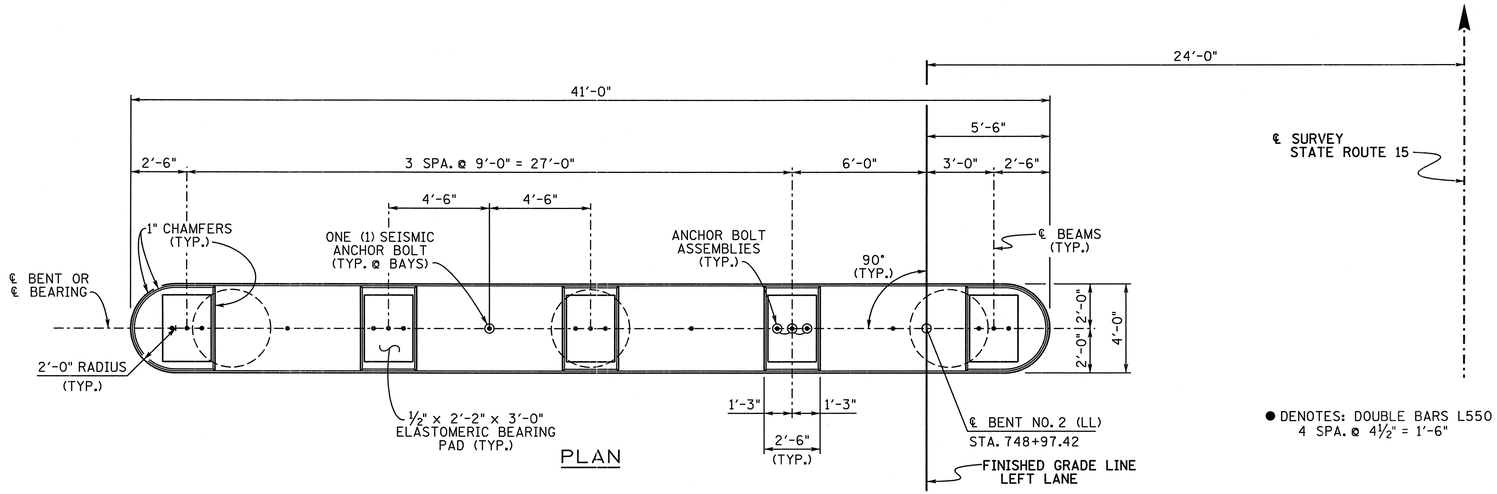

PLAN

● DENOTES: DOUBLE BARS L550
4 SPA. @ 4½" = 1'-6"

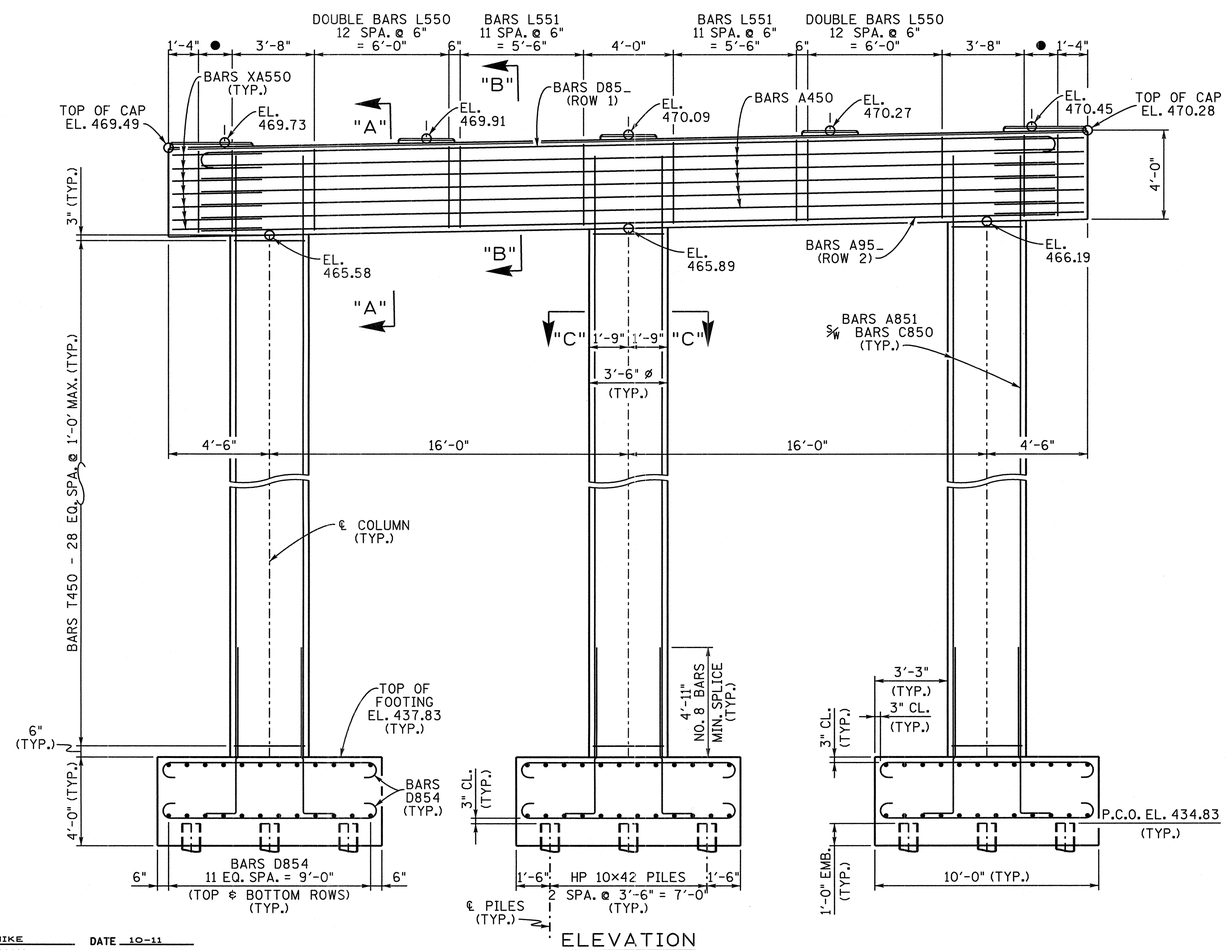

ELEVATION

(LOOKING FORWARD ON SURVEY)

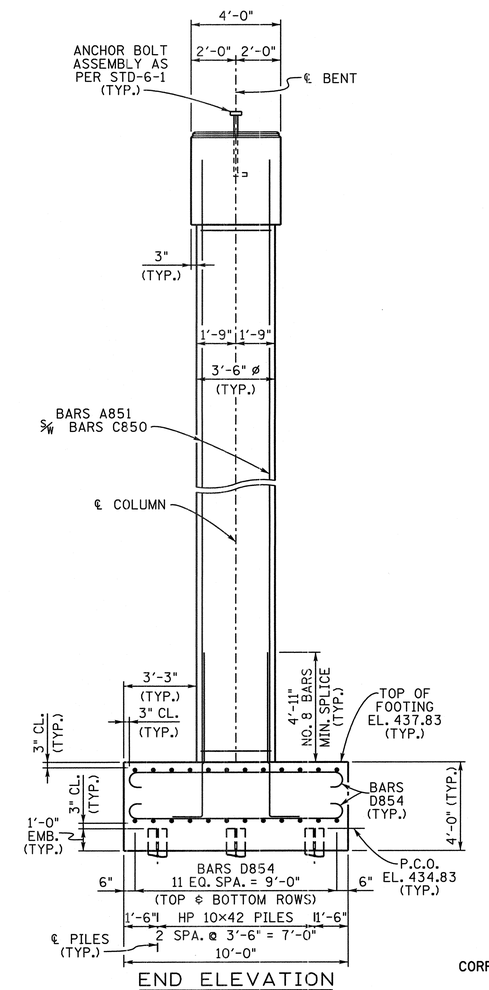

END ELEVATION

CONST. NO. 36001-3290-14

PROJECT NO.	YEAR	SHEET NO.
NHE-15(108)	2012	

REVISIONS

NO.	DATE	BY	BRIEF DESCRIPTION

NOTE: WHEN POURING CAP BEAM, PROVISIONS SHALL BE MADE FOR SETTING ANCHOR BOLTS. SEE STANDARD DRAWING STD-6-1. BOLT PROJECTION 11".

NOTE: RISER BLOCKS TO BE POURED MONOLITHICALLY WITH CAP BEAM.

NOTE: ELASTOMERIC PADS SHALL BE IN PLACE A MINIMUM OF ONE DAY BEFORE BEING DISTURBED BY SETTING BEAMS. PLACE RUBBER BONDING CEMENT IN SUCH A WAY THAT VISIBLE CONCRETE SURFACES WILL NOT BE STAINED.

NOTE: RISER BLOCK BEARING SURFACE TO CONFORM TO BOTTOM OF BEAM GRADE.

NOTE: COLUMN STEEL TO EXTEND 2'-11" MIN. INTO CAP BEAM.

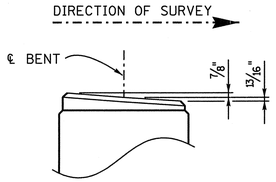

RISER BLOCK SLOPE DETAIL

(TYP. @ RISER BLOCKS)

ESTIMATED QUANTITIES

CLASS "A" CONCRETE (BRIDGES) C.Y.	STEEL BAR REINFORCEMENT (BRIDGES) LBS.
99	15,168

BRIDGE NO. 2

STATE OF TENNESSEE
DEPARTMENT OF TRANSPORTATION

BENT NO. 2
LEFT LANE
STATE ROUTE 15
OVER
BIGBEE BRANCH
STATION 748+55.75
LOG MILE 20.85
HARDIN COUNTY
2012

CORRECT Wayne J. Seger
ENGINEER OF STRUCTURES

DESIGNED BY	DAN SHIKE	DATE	10-11
DRAWN BY	T. WISEMAN	DATE	10-11
SUPERVISED BY	MBC / KDM	DATE	10-11
CHECKED BY	DAN SHIKE	DATE	01-12

D:\SRN\Bnt\bnt1021.dgn
10-MAR-2012
14:04

U-52-129

BNT1021.DGN

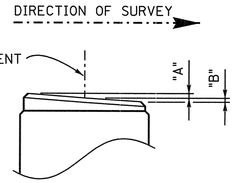

RISER BLOCK SLOPE DETAIL

TABLE OF DIMENSIONS

	"A"	"B"
RISER BLOCK "A"	7/8"	7/8"
RISER BLOCK "B"	15/16"	15/16"
RISER BLOCK "C"	15/16"	15/16"
RISER BLOCK "D"	1"	1"
RISER BLOCK "E"	1 1/16"	1 1/16"

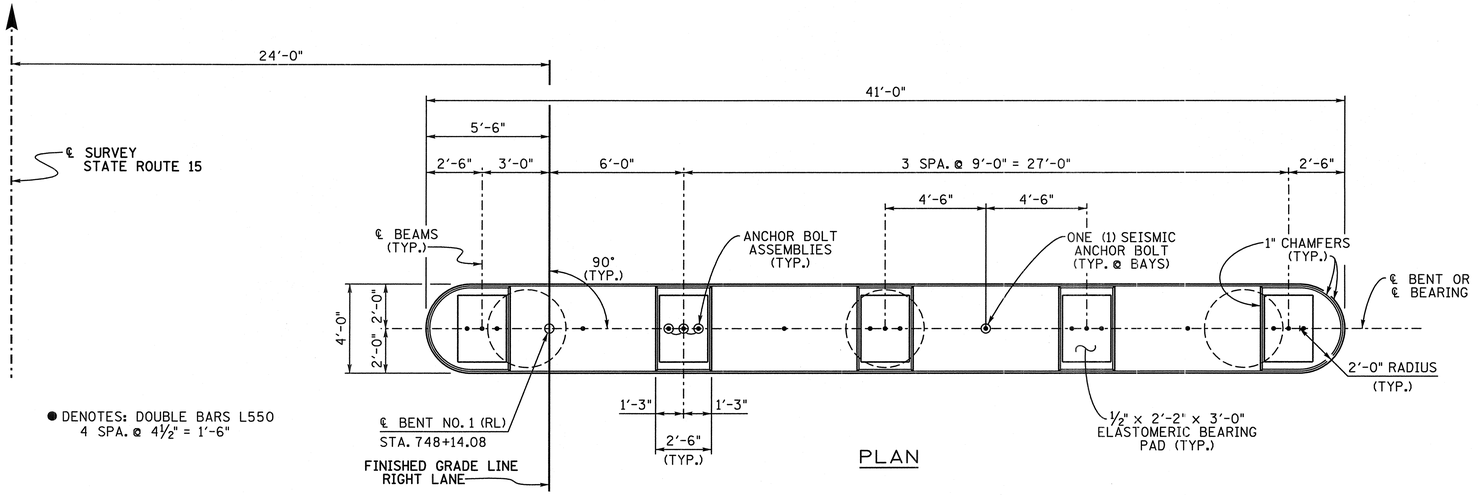

● DENOTES: DOUBLE BARS L550
4 SPA. @ 4 1/2" = 1'-6"

PLAN

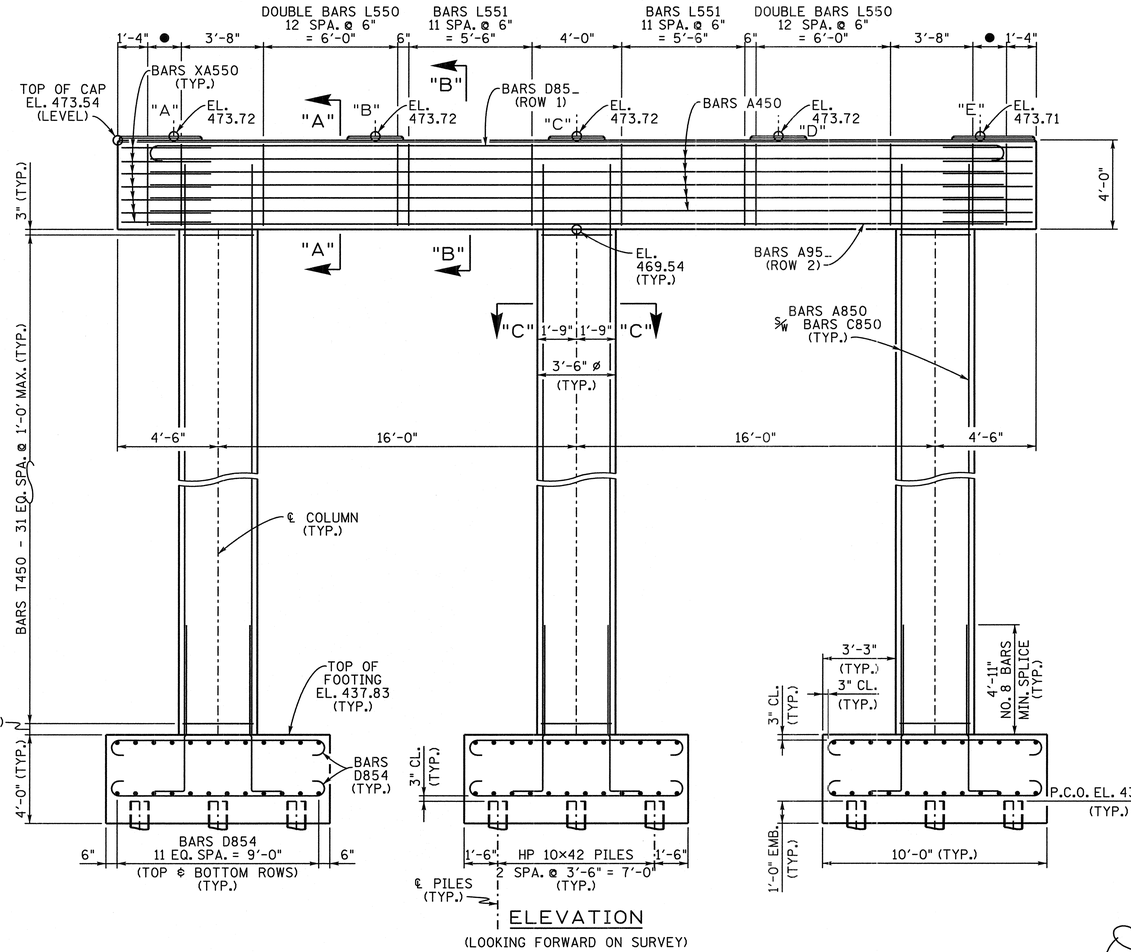

ELEVATION
(LOOKING FORWARD ON SURVEY)

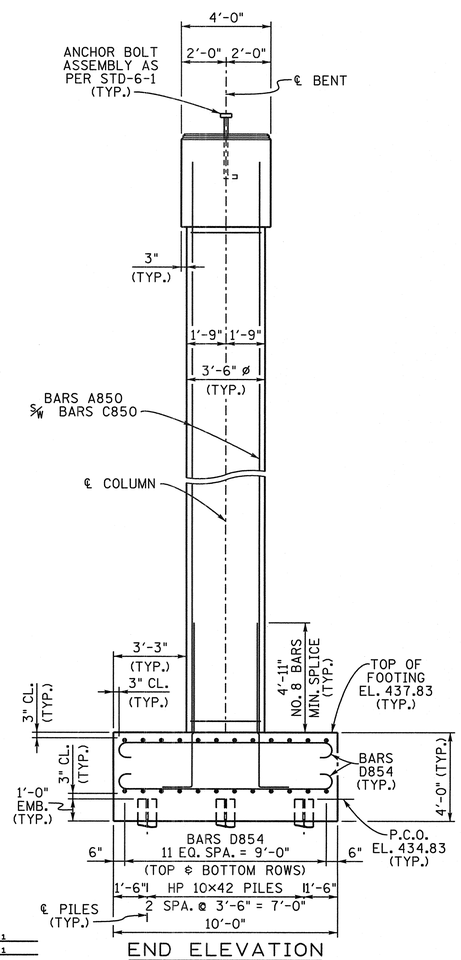

END ELEVATION

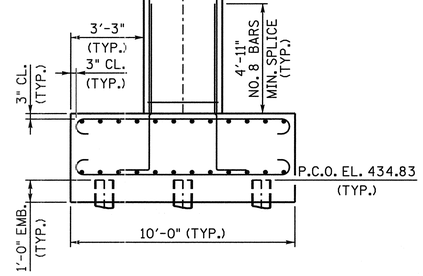

CONST. NO. 36001-3290-14

PROJECT NO.	YEAR	SHEET NO.
NHE-15(108)	2012	

REVISIONS

NO.	DATE	BY	BRIEF DESCRIPTION

NOTE: WHEN POURING CAP BEAM, PROVISIONS SHALL BE MADE FOR SETTING ANCHOR BOLTS. SEE STANDARD DRAWING STD-6-1. BOLT PROJECTION 11".

NOTE: RISER BLOCKS TO BE POURED MONOLITHICALLY WITH CAP BEAM.

NOTE: ELASTOMERIC PADS SHALL BE IN PLACE A MINIMUM OF ONE DAY BEFORE BEING DISTURBED BY SETTING BEAMS. PLACE RUBBER BONDING CEMENT IN SUCH A WAY THAT VISIBLE CONCRETE SURFACES WILL NOT BE STAINED.

NOTE: RISER BLOCK BEARING SURFACE TO CONFORM TO BOTTOM OF BEAM GRADE.

NOTE: COLUMN STEEL TO EXTEND 2'-11" MIN. INTO CAP BEAM.

ESTIMATED QUANTITIES

CLASS "A" CONCRETE (BRIDGES) C.Y.	STEEL BAR REINFORCEMENT (BRIDGES) LBS.
102	15,767

KATHLEEN D. McLAUGHLIN — STATE OF TENNESSEE — 01/20/12

BRIDGE NO. 2

STATE OF TENNESSEE
DEPARTMENT OF TRANSPORTATION

BENT NO. 1
RIGHT LANE
STATE ROUTE 15
OVER
BIGBEE BRANCH
STATION 748+55.75
LOG MILE 20.85
HARDIN COUNTY
2012

CORRECT Wayne A. Sieper
ENGINEER OF STRUCTURES

DESIGNED BY	DAN SHIKE	DATE	10-11
DRAWN BY	T. WISEMAN	DATE	10-11
SUPERVISED BY	MBC / KDM	DATE	10-11
CHECKED BY	DAN SHIKE	DATE	01-12

DGN Name: Bnt1021.dgn
Date: 1/20/2012
14:04

U-52-130

BNT1021.DGN

CONST. NO. 36001-3290-14

PROJECT NO.	YEAR	SHEET NO.
NHE-15(108)	2012	

REVISIONS

NO.	DATE	BY	BRIEF DESCRIPTION

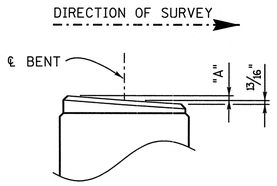

RISER BLOCK SLOPE DETAIL

TABLE OF DIMENSIONS

	"A"
RISER BLOCK "A"	7/8"
RISER BLOCK "B"	15/16"
RISER BLOCK "C"	15/16"
RISER BLOCK "D"	1"
RISER BLOCK "E"	1 1/16"

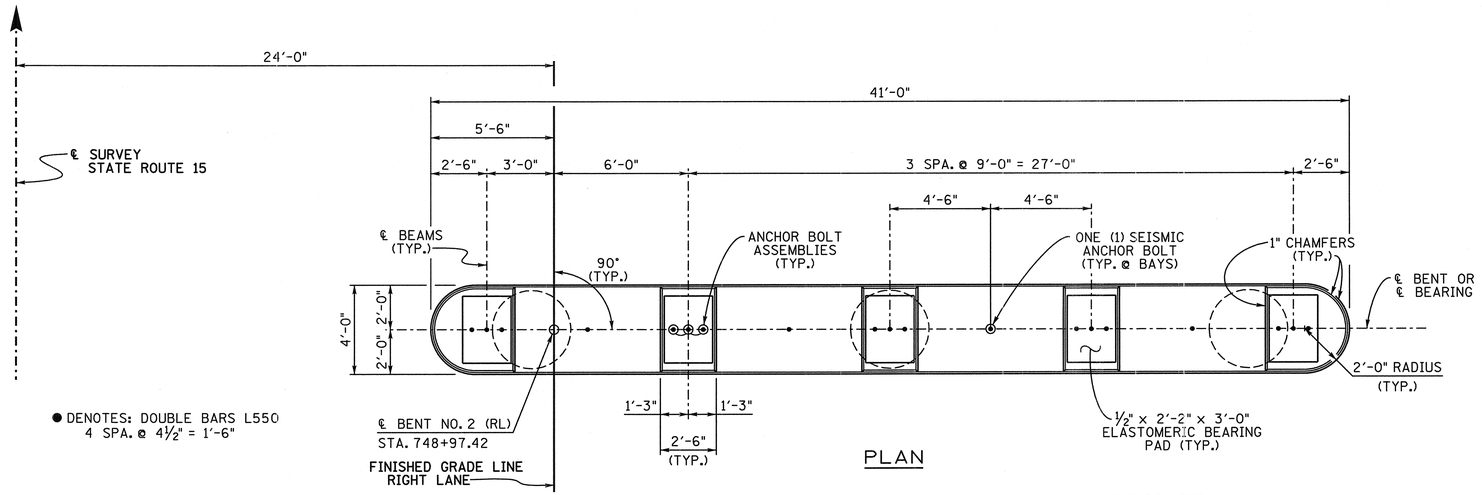

PLAN

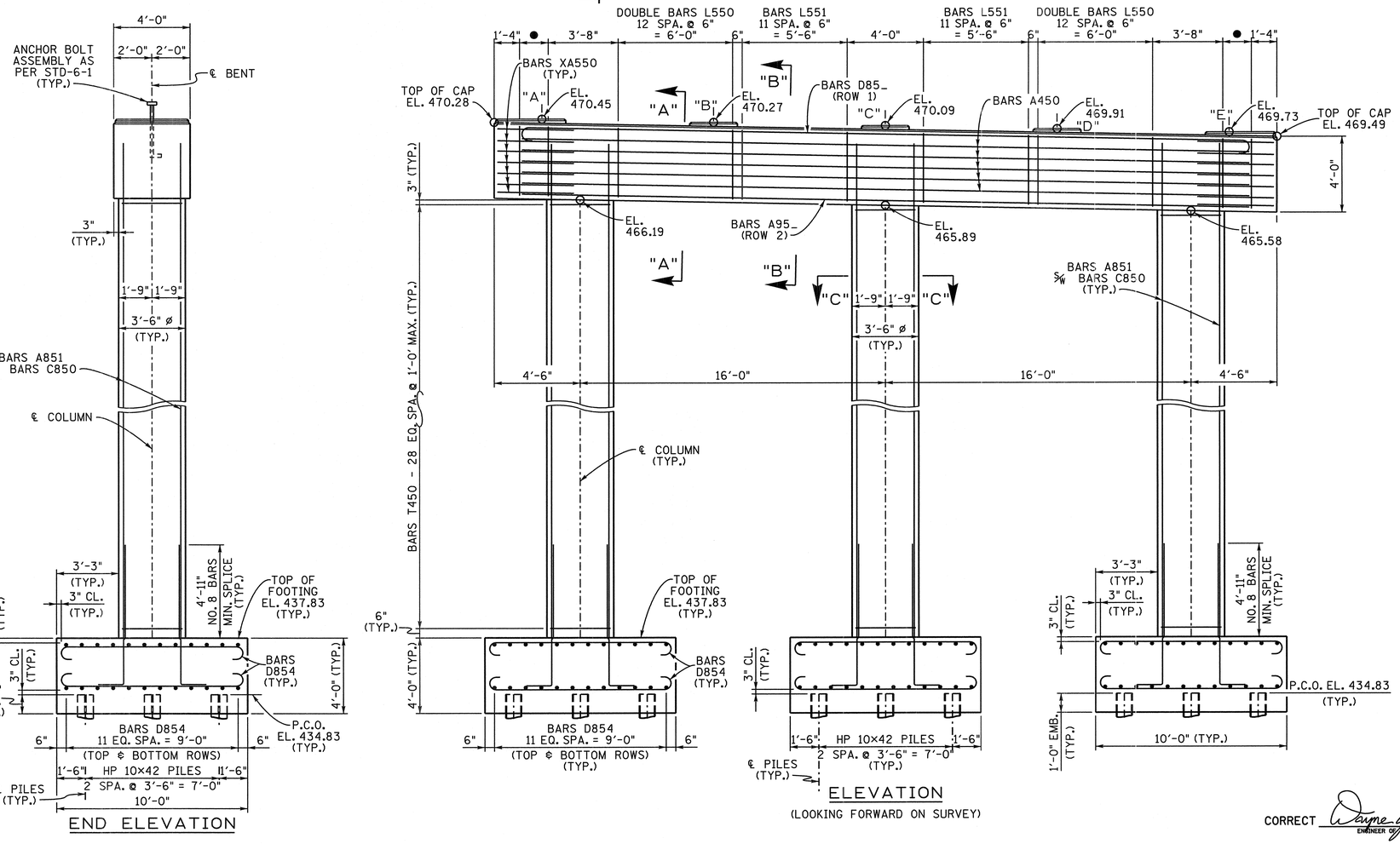

NOTE: WHEN POURING CAP BEAM, PROVISIONS SHALL BE MADE FOR SETTING ANCHOR BOLTS. SEE STANDARD DRAWING STD-6-1. BOLT PROJECTION 11".

NOTE: RISER BLOCKS TO BE POURED MONOLITHICALLY WITH CAP BEAM.

NOTE: ELASTOMERIC PADS SHALL BE IN PLACE A MINIMUM OF ONE DAY BEFORE BEING DISTURBED BY SETTING BEAMS. PLACE RUBBER BONDING CEMENT IN SUCH A WAY THAT VISIBLE CONCRETE SURFACES WILL NOT BE STAINED.

NOTE: RISER BLOCK BEARING SURFACE TO CONFORM TO BOTTOM OF BEAM GRADE.

NOTE: COLUMN STEEL TO EXTEND 2'-11" MIN. INTO CAP BEAM.

ESTIMATED QUANTITIES

CLASS "A" CONCRETE (BRIDGES) C.Y.	STEEL BAR REINFORCEMENT (BRIDGES) LBS.
99	15,168

BRIDGE NO. 2

STATE OF TENNESSEE
DEPARTMENT OF TRANSPORTATION

BENT NO. 2
RIGHT LANE
STATE ROUTE 15
OVER
BIGBEE BRANCH
STATION 748+55.75
LOG MILE 20.85
HARDIN COUNTY
2012

CORRECT Wayne J. Feger
ENGINEER OF STRUCTURES

DESIGNED BY	DAN SHIKE	DATE	10-11
DRAWN BY	T. WISEMAN	DATE	10-11
SUPERVISED BY	MBC / KDM	DATE	10-11
CHECKED BY	DAN SHIKE	DATE	01-12

D:\dgn\Bnt\bnt1021.dgn
14:09
06-Nov-2012

U-52-131

BNT1021.DGN

CONST. NO. 36001-3290-14

PROJECT NO.	YEAR	SHEET NO.
NHE-15(108)	2012	

REVISIONS

NO.	DATE	BY	BRIEF DESCRIPTION

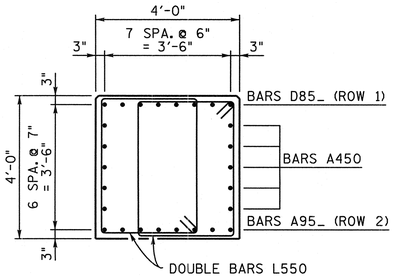

SECTION "A" -"A"

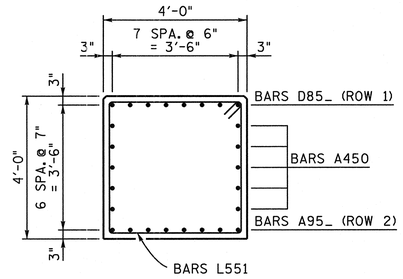

SECTION "B" -"B"

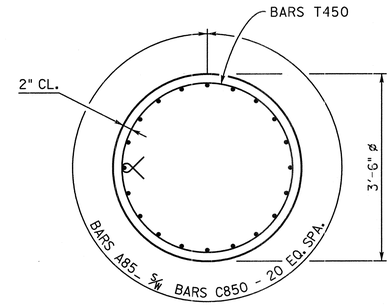

SECTION "C" -"C"

(TYP. @ COLUMNS)

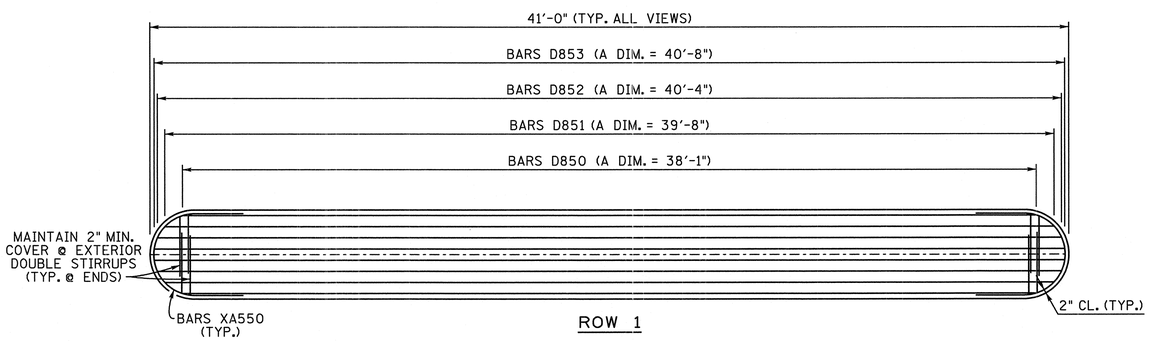

ROW 1

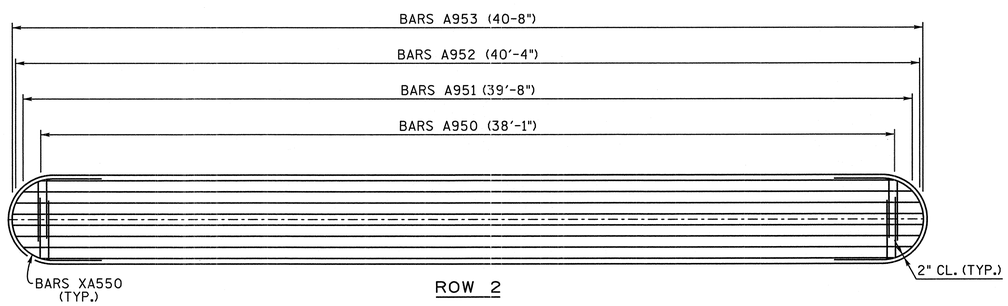

ROW 2

PLAN OF MAIN REINFORCEMENT

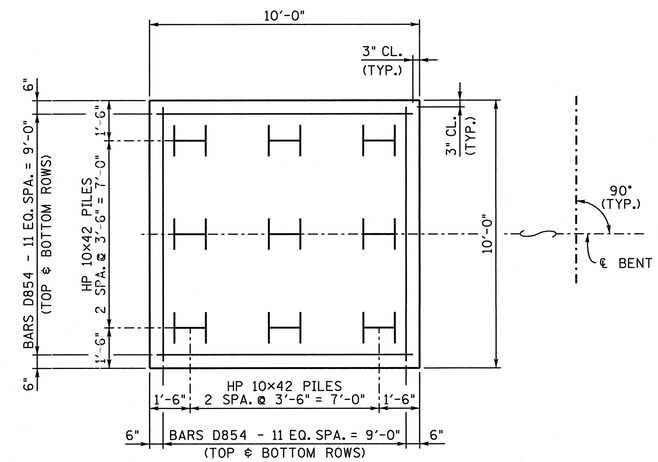

PLAN OF FOOTING

BRIDGE NO. 2

STATE OF TENNESSEE
DEPARTMENT OF TRANSPORTATION

BENT NO. 1 AND NO. 2 DETAILS
LEFT LANE AND RIGHT LANE
STATE ROUTE 15
OVER
BIGBEE BRANCH
STATION 748+55.75
LOG MILE 20.85
HARDIN COUNTY
2012

KATHLEEN D. McLAUGHLIN — STATE OF TENNESSEE — REGISTERED PROFESSIONAL ENGINEER — No. 101881 — 6/28/12

CORRECT Wayne G. Sieger
ENGINEER OF STRUCTURES

U-52-132

DESIGNED BY	DAN SHIKE	DATE	10-11
DRAWN BY	T. WISEMAN	DATE	10-11
SUPERVISED BY	MBC / KDM	DATE	10-11
CHECKED BY	DAN SHIKE	DATE	01-12

D:\dgn\Bnt\bnt1021.dgn
6/28/2012
15:25

FFD1021.DGN

CONST. NO. 36001-3290-14

PROJECT NO.	YEAR	SHEET NO.
NHE-15(108)	2012	

REVISIONS

NO.	DATE	BY	BRIEF DESCRIPTION

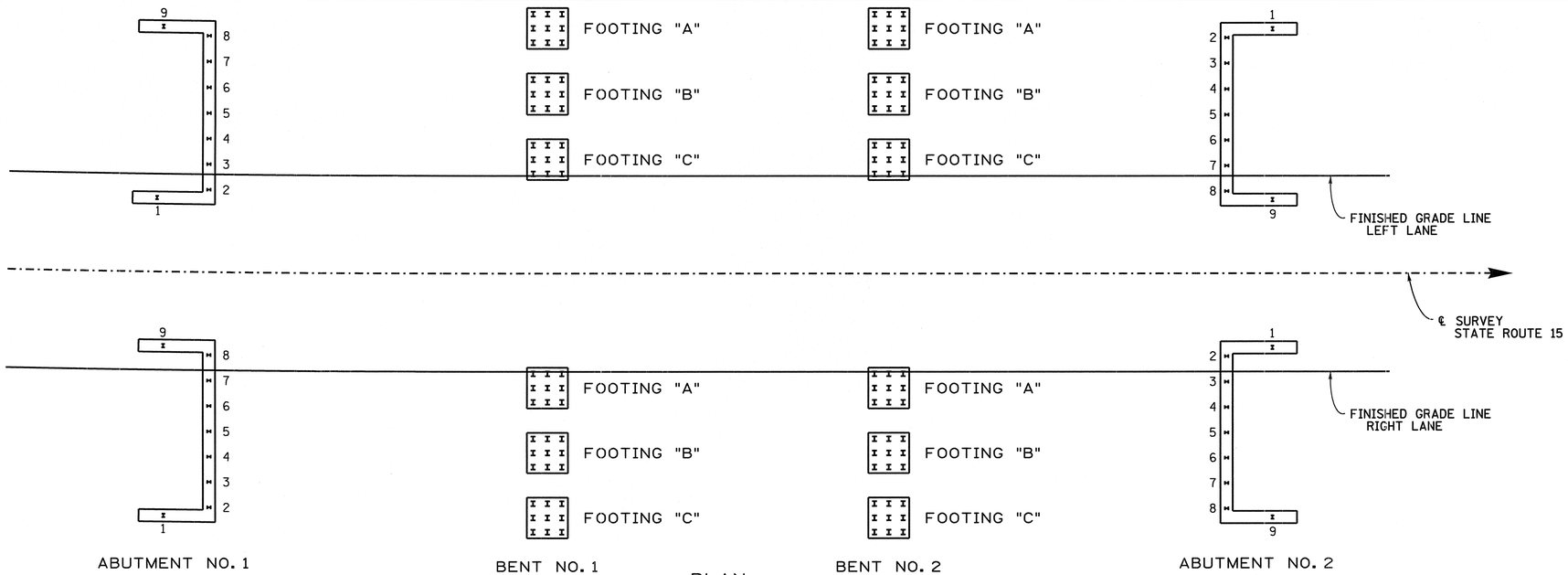

PLAN

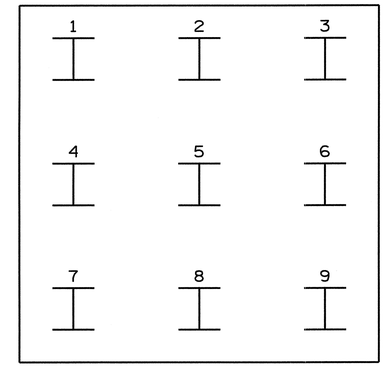

PLAN OF FOOTING

TABLE OF PILE DATA

				1	2	3	4	5	6	7	8	9
LEFT LANE		ABUTMENT NO. 1	PILE CUT-OFF ELEVATION									
			PILE TIP ELEVATION									
			IN PLACE PILE LENGTH									
	BENT NO. 1	FOOTING "A"	PILE CUT-OFF ELEVATION									
			PILE TIP ELEVATION									
			IN PLACE PILE LENGTH									
		FOOTING "B"	PILE CUT-OFF ELEVATION									
			PILE TIP ELEVATION									
			IN PLACE PILE LENGTH									
		FOOTING "C"	PILE CUT-OFF ELEVATION									
			PILE TIP ELEVATION									
			IN PLACE PILE LENGTH									
	BENT NO. 2	FOOTING "A"	PILE CUT-OFF ELEVATION									
			PILE TIP ELEVATION									
			IN PLACE PILE LENGTH									
		FOOTING "B"	PILE CUT-OFF ELEVATION									
			PILE TIP ELEVATION									
			IN PLACE PILE LENGTH									
		FOOTING "C"	PILE CUT-OFF ELEVATION									
			PILE TIP ELEVATION									
			IN PLACE PILE LENGTH									
		ABUTMENT NO. 2	PILE CUT-OFF ELEVATION									
			PILE TIP ELEVATION									
			IN PLACE PILE LENGTH									

				1	2	3	4	5	6	7	8	9
RIGHT LANE		ABUTMENT NO. 1	PILE CUT-OFF ELEVATION									
			PILE TIP ELEVATION									
			IN PLACE PILE LENGTH									
	BENT NO. 1	FOOTING "A"	PILE CUT-OFF ELEVATION									
			PILE TIP ELEVATION									
			IN PLACE PILE LENGTH									
		FOOTING "B"	PILE CUT-OFF ELEVATION									
			PILE TIP ELEVATION									
			IN PLACE PILE LENGTH									
		FOOTING "C"	PILE CUT-OFF ELEVATION									
			PILE TIP ELEVATION									
			IN PLACE PILE LENGTH									
	BENT NO. 2	FOOTING "A"	PILE CUT-OFF ELEVATION									
			PILE TIP ELEVATION									
			IN PLACE PILE LENGTH									
		FOOTING "B"	PILE CUT-OFF ELEVATION									
			PILE TIP ELEVATION									
			IN PLACE PILE LENGTH									
		FOOTING "C"	PILE CUT-OFF ELEVATION									
			PILE TIP ELEVATION									
			IN PLACE PILE LENGTH									
		ABUTMENT NO. 2	PILE CUT-OFF ELEVATION									
			PILE TIP ELEVATION									
			IN PLACE PILE LENGTH									

NOTE TO CONTRACTOR AND CONSTRUCTION OFFICE:
THE BLANKS ON THIS SHEET ARE TO BE FILLED IN BY THE CONSTRUCTION OFFICE AND/OR FIELD ENGINEER GIVING AS BUILT CONDITIONS. AFTER COMPLETION IT IS TO BE SENT TO THE DIVISION OF STRUCTURES TO BECOME PART OF FINAL BRIDGE DOCUMENTS.

BRIDGE NO. 2
STATE OF TENNESSEE
DEPARTMENT OF TRANSPORTATION

FINAL FOUNDATION DATA
LEFT AND RIGHT LANES
STATE ROUTE 15
OVER
BIGBEE BRANCH
STATION 748+55.75
LOG MILE 20.85
HARDIN COUNTY
2012

CORRECT Wayne G. Sieger
ENGINEER OF STRUCTURES

U-52-133

DESIGNED BY DAN SHIKE DATE 10-11
DRAWN BY T. WISEMAN DATE 10-11
SUPERVISED BY MBC / KDM DATE 10-11
CHECKED BY DAN SHIKE DATE 01-12

D:\dgn\ffd\ffd1021.dgn
DGN-2012
14:28

BILL OF STEEL

SUPERSTRUCTURE

BAR	LOCATION	SIZE	NO. REQ'D	BENDING DIMENSIONS A	B	C	D	LENGTH
A500	DIAPHRAGM	5	24					37'-10"
L400	DIAPHRAGM	4	20	1'-2"	1'-2"			5'-5"
L401	DIAPHRAGM	4	56	1'-2"	4'-4"			11'-9"

SUPERSTRUCTURE EPOXY

BAR	LOCATION	SIZE	NO. REQ'D	BENDING DIMENSIONS A	B	C	D	LENGTH
A501E	SLAB	5	662					42'-11"
A502E	SLAB	5	90					43'-4"
A503E	SLAB	5	136					60'-0"
A504E	SLAB	5	34					21'-10"
A700E	SLAB	7	90					25'-0"
A701E	SLAB	7	45					26'-2"
A800E	SLAB	8	90					53'-0"
A801E	SLAB	8	80					36'-0"
B570E	SLAB/PARAPET	5	1,512	2'-1"				2'-8"

ABUTMENT NO. 1

BAR	LOCATION	SIZE	NO. REQ'D	BENDING DIMENSIONS A	B	C	D	LENGTH
A440	WINGWALLS	4	32					5'-4"
A441	WINGWALLS	4	14					16'-11"
A442	ROADWAY BRACKET	4	1					39'-11"
A540	ABUTMENT BEAM	5	2					44'-5"
A541	WING BEAMS	5	4					18'-5"
A640	ENDWALL	6	12					42'-11"
A641	WINGWALLS	6	32					5'-4"
A643	ABUT. BEAM/ENDWALL	6	8					3'-8"
A644	WINGWALLS	6	14					16'-11"
A740	ABUTMENT BEAM	7	10					44'-5"
A741	WING BEAMS	7	20					18'-5"
B640	ENDWALL	6	12	5'-0"				5'-8"
H540	ENDWALL	5	40	2'-2"	6"			3'-2"
H640	ABUT. BEAM	6	40	1'-2"	3'-8"			8'-6"
H641	WING BEAMS	6	32	1'-2"	4'-4"			9'-10"
L540	ABUT. BEAM/WING BEAMS	5	74	2'-8"	2'-8"			11'-7"

ABUTMENT NO. 1 EPOXY

BAR	LOCATION	SIZE	NO. REQ'D	BENDING DIMENSIONS A	B	C	D	LENGTH
A640E	ENDWALL	6	2					42'-11"
A642E	ENDWALL	6	88					5'-3"
B570E	WINGWALL/PARAPET	5	60	2'-1"				2'-8"
F640E	ENDWALL/P.A.B.E.	6	41	1'-1"	1'-3"	1'-1"	1'-3"	4'-0"
HP570E	PARAPET/WINGWALLS	5	16	4"	3'-10"	1'-1"		7'-11"
R640E	ENDWALL/SLAB	6	40	2'-0"	2'-0"			4'-0"

ABUTMENT NO. 2

BAR	LOCATION	SIZE	NO. REQ'D	BENDING DIMENSIONS A	B	C	D	LENGTH
A441	WINGWALLS	4	12					16'-11"
A442	ROADWAY BRACKET	4	1					39'-11"
A443	WINGWALLS	4	32					4'-8"
A540	ABUTMENT BEAM	5	2					44'-5"
A541	WING BEAMS	5	4					18'-5"
A640	ENDWALL	6	10					42'-11"
A643	ABUT. BEAM/ENDWALL	6	8					3'-8"
A644	WINGWALLS	6	12					16'-11"
A645	WINGWALLS	6	32					4'-8"
A740	ABUTMENT BEAM	7	10					44'-5"
A741	WING BEAMS	7	20					18'-5"
B640	ENDWALL	6	10	5'-0"				5'-8"
H540	ENDWALL	5	40	2'-2"	6"			3'-2"
H640	ABUT. BEAM	6	40	1'-2"	3'-8"			8'-6"
H641	WING BEAMS	6	32	1'-2"	4'-4"			9'-10"
L540	ABUT. BEAM/WING BEAMS	5	74	2'-8"	2'-8"			11'-7"

ABUTMENT NO. 2 EPOXY

BAR	LOCATION	SIZE	NO. REQ'D	BENDING DIMENSIONS A	B	C	D	LENGTH
A640E	ENDWALL	6	2					42'-11"
A642E	ENDWALL	6	88					5'-3"
B570E	WINGWALL/PARAPET	5	60	2'-1"				2'-8"
F640E	ENDWALL/P.A.B.E.	6	41	1'-1"	1'-3"	1'-1"	1'-3"	4'-0"
HP570E	PARAPET/WINGWALLS	5	16	4"	3'-10"	1'-1"		7'-11"
R640E	ENDWALL/SLAB	6	40	2'-0"	2'-0"			4'-0"

BENT NO. 1

BAR	LOCATION	SIZE	NO. REQ'D	BENDING DIMENSIONS A	B	C	D	LENGTH
A450	CAP	4	10					38'-1"
A850	CAP/COLUMNS	8	60					34'-8"
A950	CAP	9	2					38'-1"
A951	CAP	9	2					39'-8"
A952	CAP	9	2					40'-4"
A953	CAP	9	2					40'-8"
C850	COLUMNS/FOOTINGS	8	60	7'-4"				8'-8"
D850	CAP	8	2	38'-1"				39'-11"
D851	CAP	8	2	39'-8"				41'-6"
D852	CAP	8	2	40'-4"				42'-2"
D853	CAP	8	2	40'-8"				42'-6"
D854	FOOTINGS	8	144	9'-6"				11'-4"
L550	CAP	5	72	2'-8"	3'-8"			13'-7"
L551	CAP	5	24	3'-8"	3'-8"			15'-7"
T450	COLUMNS	4	96	3'-2"				10'-9"
XA550	CAP	5	14	1'-10"	2'-2"			10'-1"

BENT NO. 2

BAR	LOCATION	SIZE	NO. REQ'D	BENDING DIMENSIONS A	B	C	D	LENGTH
A450	CAP	4	10					38'-1"
A851	CAP/COLUMNS	8	60					31'-4"
A950	CAP	9	2					38'-1"
A951	CAP	9	2					39'-8"
A952	CAP	9	2					40'-4"
A953	CAP	9	2					40'-8"
C850	COLUMNS/FOOTINGS	8	60	7'-4"				8'-8"
D850	CAP	8	2	38'-1"				39'-11"
D851	CAP	8	2	39'-8"				41'-6"
D852	CAP	8	2	40'-4"				42'-2"
D853	CAP	8	2	40'-8"				42'-6"
D854	FOOTINGS	8	144	9'-6"				11'-4"
L550	CAP	5	72	2'-8"	3'-8"			13'-7"
L551	CAP	5	24	3'-8"	3'-8"			15'-7"
T450	COLUMNS	4	87	3'-2"				10'-9"
XA550	CAP	5	14	1'-10"	2'-2"			10'-1"

CONST. NO. 36001-3290-14

PROJECT NO.	YEAR	SHEET NO.
NHE-15(108)	2012	

REVISIONS

NO.	DATE	BY	BRIEF DESCRIPTION

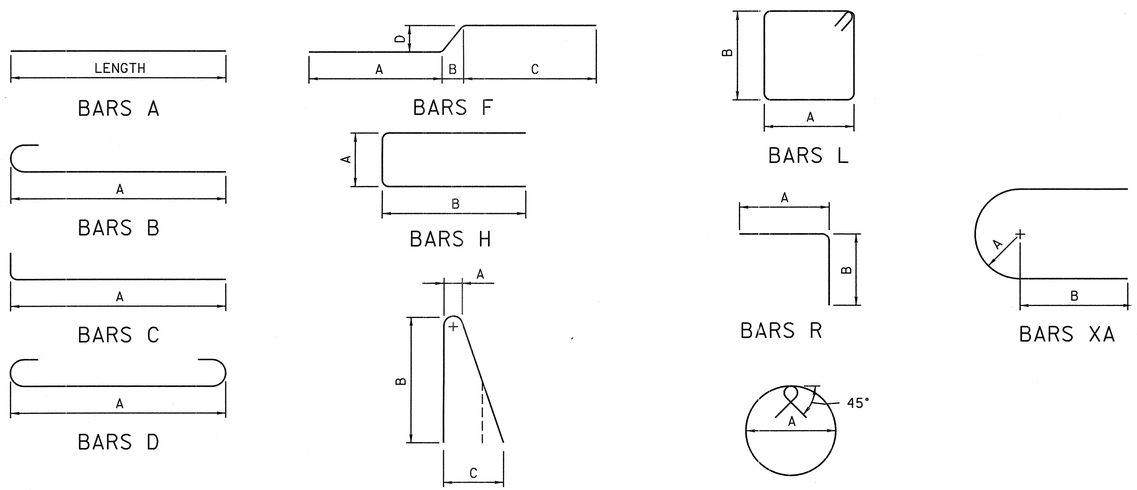

REINFORCING STEEL CODE

TYPE	SIZE	SERIES
A	5	06

NOTE: DIMENSIONS SHOWN ON THIS SHEET ARE OUTSIDE TO OUTSIDE OF BAR. STANDARD C.R.S.I. HOOK DETAILS SHALL APPLY, EXCEPT AS NOTED.

NOTE: THE SUFFIX E FOR BARS SO MARKED DENOTES EPOXY COATED REINFORCEMENT.

BRIDGE NO. 2
STATE OF TENNESSEE
DEPARTMENT OF TRANSPORTATION

BILL OF STEEL
LEFT LANE
STATE ROUTE 15
OVER
BIGBEE BRANCH
STATION 748+55.75
LOG MILE 20.85
HARDIN COUNTY
2012

KATHLEEN D. McLAUGHLIN — STATE OF TENNESSEE — No. 101551 — PROFESSIONAL ENGINEER — AGRICULTURE — 1/28/12

CORRECT _____ ENGINEER OF STRUCTURES

U-52-134

DESIGNED BY	D. SHIKE	DATE	09-10
DRAWN BY	B. EASTON	DATE	10-11
SUPERVISED BY	KDM/MBC	DATE	10-11
CHECKED BY	DJS	DATE	01-12

D:\Dgn\Bos\BOS1021.DGN
10:38 JAN-2-2012

BILL OF STEEL

SUPERSTRUCTURE

BAR	LOCATION	SIZE	NO. REQ'D	BENDING DIMENSIONS A	B	C	D	LENGTH
A500	DIAPHRAGM	5	24					37'-10"
L400	DIAPHRAGM	4	20	1'-2"	1'-2"			5'-5"
L401	DIAPHRAGM	4	56	1'-2"	4'-4"			11'-9"

SUPERSTRUCTURE EPOXY

BAR	LOCATION	SIZE	NO. REQ'D	BENDING DIMENSIONS A	B	C	D	LENGTH
A501E	SLAB	5	662					42'-11"
A502E	SLAB	5	90					43'-4"
A503E	SLAB	5	136					60'-0"
A504E	SLAB	5	34					21'-10"
A700E	SLAB	7	90					25'-0"
A701E	SLAB	7	45					26'-2"
A800E	SLAB	8	90					53'-0"
A801E	SLAB	8	80					36'-0"
B570E	SLAB/PARAPET	5	1,512	2'-1"				2'-8"

ABUTMENT NO. 1

BAR	LOCATION	SIZE	NO. REQ'D	BENDING DIMENSIONS A	B	C	D	LENGTH
A440	WINGWALLS	4	32					5'-4"
A441	WINGWALLS	4	14					16'-11"
A442	ROADWAY BRACKET	4	1					39'-11"
A540	ABUTMENT BEAM	5	2					44'-5"
A541	WING BEAMS	5	4					18'-5"
A640	ENDWALL	6	12					42'-11"
A641	WINGWALLS	6	32					5'-4"
A643	ABUT. BEAM/ENDWALL	6	8					3'-8"
A644	WINGWALLS	6	14					16'-11"
A740	ABUTMENT BEAM	7	10					44'-5"
A741	WING BEAMS	7	20					18'-5"
B640	ENDWALL	6	12	5'-0"				5'-8"
H540	ENDWALL	5	40	2'-2"	6"			3'-2"
H640	ABUT. BEAM	6	40	1'-2"	3'-8"			8'-6"
H641	WING BEAMS	6	32	1'-2"	4'-4"			9'-10"
L540	ABUT. BEAM/WING BEAMS	5	74	2'-8"	2'-8"			11'-7"

ABUTMENT NO. 1 EPOXY

BAR	LOCATION	SIZE	NO. REQ'D	BENDING DIMENSIONS A	B	C	D	LENGTH
A640E	ENDWALL	6	2					42'-11"
A642E	ENDWALL	6	88					5'-3"
B570E	WING WALL/PARAPET	5	60	2'-1"				2'-8"
F640E	ENDWALL/P.A.B.E.	6	41	1'-1"	1'-3"	1'-1"	1'-3"	4'-0"
HP570E	PARAPET/WINGWALLS	5	16	4"	3'-10"	1'-1"		7'-11"
R640E	ENDWALL/SLAB	6	40	2'-0"	2'-0"			4'-0"

ABUTMENT NO. 2

BAR	LOCATION	SIZE	NO. REQ'D	BENDING DIMENSIONS A	B	C	D	LENGTH
A441	WINGWALLS	4	12					16'-11"
A442	WINGWALLS	4	1					39'-11"
A443	ROADWAY BRACKET	4	32					4'-8"
A540	ABUTMENT BEAM	5	2					44'-5"
A541	WING BEAMS	5	4					18'-5"
A640	ENDWALL	6	10					42'-11"
A643	ABUT. BEAM/ENDWALL	6	8					3'-8"
A644	WINGWALLS	6	12					16'-11"
A645	WINGWALLS	6	32					4'-8"
A740	ABUTMENT BEAM	7	10					44'-5"
A741	WING BEAMS	7	20					18'-5"
B640	ENDWALL	6	10	5'-0"				5'-8"
H540	ENDWALL	5	40	2'-2"	6"			3'-2"
H640	ABUT. BEAM	6	40	1'-2"	3'-8"			8'-6"
H641	WING BEAMS	6	32	1'-2"	4'-4"			9'-10"
L540	ABUT. BEAM/WING BEAMS	5	74	2'-8"	2'-8"			11'-7"

ABUTMENT NO. 2 EPOXY

BAR	LOCATION	SIZE	NO. REQ'D	BENDING DIMENSIONS A	B	C	D	LENGTH
A640E	ENDWALL	6	2					42'-11"
A642E	ENDWALL	6	88					5'-3"
B570E	WINGWALL/PARAPET	5	60	2'-1"				2'-8"
F640E	ENDWALL/P.A.B.E.	6	41	1'-1"	1'-3"	1'-1"	1'-3"	4'-0"
HP570E	PARAPET/WINGWALLS	5	16	4"	3'-10"	1'-1"		7'-11"
R640E	ENDWALL/SLAB	6	40	2'-0"	2'-0"			4'-0"

BENT NO. 1

BAR	LOCATION	SIZE	NO. REQ'D	BENDING DIMENSIONS A	B	C	D	LENGTH
A450	CAP	4	10					38'-1"
A850	CAP/COLUMNS	8	60					34'-8"
A950	CAP	9	2					38'-1"
A951	CAP	9	2					39'-8"
A952	CAP	9	2					40'-4"
A953	CAP	9	2					40'-8"
C850	COLUMNS/FOOTINGS	8	60	7'-4"				8'-8"
D850	CAP	8	2	38'-1"				39'-11"
D851	CAP	8	2	39'-8"				41'-6"
D852	CAP	8	2	40'-4"				42'-2"
D853	CAP	8	2	40'-8"				42'-6"
D854	FOOTINGS	8	144	9'-6"				11'-4"
L550	CAP	5	72	2'-8"	3'-8"			13'-7"
L551	CAP	5	24	3'-8"	3'-8"			15'-7"
T450	COLUMNS	4	96	3'-2"				10'-9"
XA550	CAP	5	14	1'-10"	2'-2"			10'-1"

BENT NO. 2

BAR	LOCATION	SIZE	NO. REQ'D	BENDING DIMENSIONS A	B	C	D	LENGTH
A450	CAP	4	10					38'-1"
A851	CAP/COLUMNS	8	60					31'-4"
A950	CAP	9	2					38'-1"
A951	CAP	9	2					39'-8"
A952	CAP	9	2					40'-4"
A953	CAP	9	2					40'-8"
C850	COLUMNS/FOOTINGS	8	60	7'-4"				8'-8"
D850	CAP	8	2	38'-1"				39'-11"
D851	CAP	8	2	39'-7"				41'-6"
D852	CAP	8	2	40'-4"				42'-2"
D853	CAP	8	2	40'-8"				42'-6"
D854	FOOTINGS	8	144	9'-6"				11'-4"
L550	CAP	5	72	2'-8"	3'-8"			13'-7"
L551	CAP	5	24	3'-8"	3'-8"			15'-7"
T450	COLUMNS	4	87	3'-2"				10'-9"
XA550	CAP	5	14	1'-10"	2'-2"			10'-1"

CONST. NO. 36001-3290-14

PROJECT NO.	YEAR	SHEET NO.
NHE-15(108)	2012	

REVISIONS

NO.	DATE	BY	BRIEF DESCRIPTION

BARS A

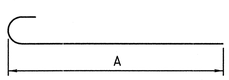

BARS B

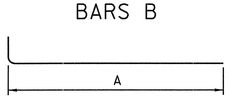

BARS C

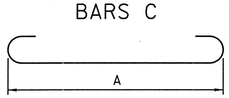

BARS D

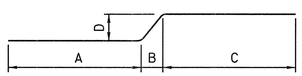

BARS F

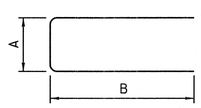

BARS H

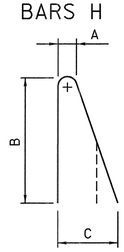

BARS HP
(BEND IN FIELD)

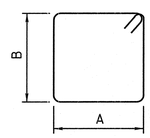

BARS L

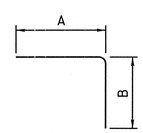

BARS R

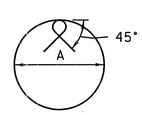

BARS T

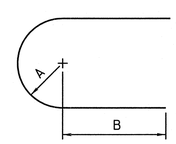

BARS XA

REINFORCING STEEL CODE

TYPE	SIZE	SERIES
A	5	06

NOTE: DIMENSIONS SHOWN ON THIS SHEET ARE OUTSIDE TO OUTSIDE OF BAR. STANDARD C.R.S.I. HOOK DETAILS SHALL APPLY, EXCEPT AS NOTED.

NOTE: THE SUFFIX E FOR BARS SO MARKED DENOTES EPOXY COATED REINFORCEMENT.

BRIDGE NO. 2
STATE OF TENNESSEE
DEPARTMENT OF TRANSPORTATION

BILL OF STEEL
RIGHT LANE
STATE ROUTE 15
OVER
BIGBEE BRANCH
STATION 748+55.75
LOG MILE 20.85
HARDIN COUNTY
2012

KATHLEEN D. McLAUGHLIN
REGISTERED ENGINEER
AGRICULTURE
No. 101888
STATE OF TENNESSEE
10/26/12

CORRECT Wayne J. Segui
ENGINEER OF STRUCTURES

U-52-135

DESIGNED BY	D. SHIKE	DATE	09-10
DRAWN BY	B. EASTON	DATE	10-11
SUPERVISED BY	KDM/MBC	DATE	10-11
CHECKED BY	DJS	DATE	01-12

D:\Dgn\Bos\BOS1021.DGN
10-24-2012
10:39

RET1020A.DGN

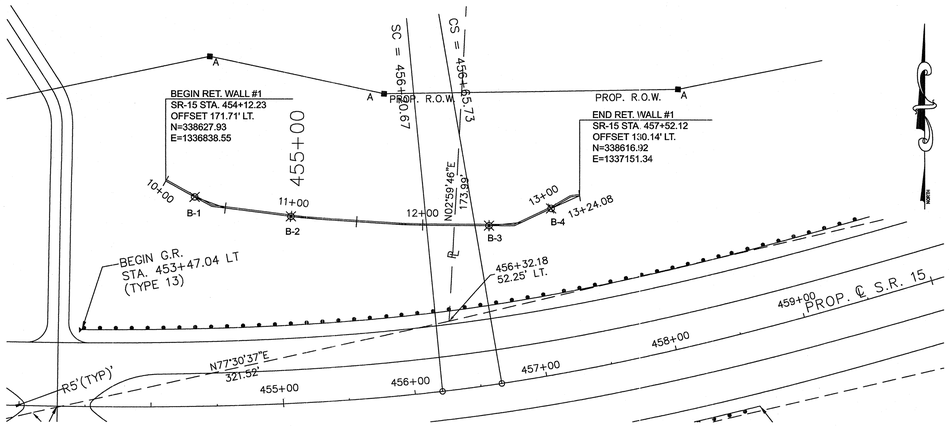

PLAN VIEW - RETAINING WALL #1 @ WILSON BRANCH
SCALE: 1"=50'

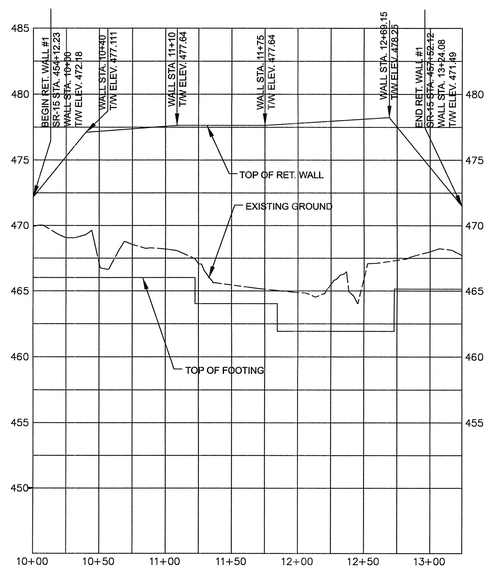

PROFILE VIEW - RETAINING WALL #1 @ WILSON BRANCH
SCALE: 1"=50' HORIZ. 1"=5' VERT.

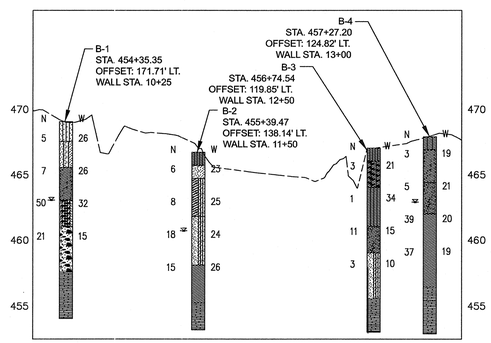

GEOTECHNICAL INFORMATION @ WILSON BRANCH
SCALE: 1"=5' VERT.

NOTES:

1. "BACK OF WALL" PERTAINS TO THE R.O.W. SIDE OF THE WALL.
2. "FACE OF WALL" PERTAINS TO THE ROADWAY SIDE OF THE WALL.

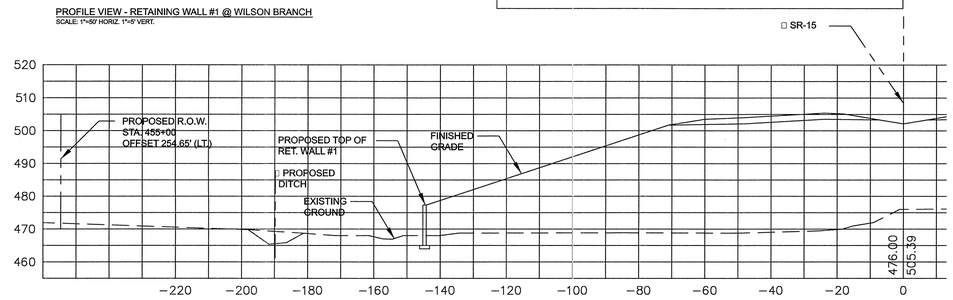

TYPICAL SECTION (STA. 455+00)
SCALE: 1"=20' HORIZ. 1"=20' VERT.

ESTIMATED QUANTITIES

604-07.01
RETAINING WALL NO. 1
S.F.
4034

LEGEND:

- HIGH PLASTICITY CLAY
- CLAY
- SANDY CLAY
- CLAYEY SAND
- SAND
- GRAVELY CLAY OR CLAYEY GRAVEL
- GRAVEL
- SANDY GRAVEL
- SILTY SAND
- SILTY CLAY
- ELASTIC SILT
- CLAYEY SILT
- ● LIMESTONE
- ● SHALE
- ● LIMESTONE WITH INTERBEDDED SHALE
- ● SANDSTONE
- ● SHALE WITH SANDSTONE
- VOID UNDER GROUND
- SILTY GRAVEL
- INTERBEDDED CHERT LIMESTONE AND SHALE
- ORGANIC MATERIAL
- ● = ROCK

ACCEPTABLE WALL TYPES

The different types of earth retaining structures listed below are considered suitable for the site.

- Gravity Wall
- MSE Wall (applicability to be determined by space constraints)
- Gabion
- Reinforced Soil Slope (RSS)
- Cast-in-Place Concrete Cantilever Gravity Wall

EXCAVATION AND BACKFILL

Temporary construction slopes should have a maximum allowable slope of 1:1. The Contractor shall ensure that these temporary back slopes are not and do not become unstable. If a slope is unstable, becomes unstable, or is unacceptable for other reasons, then temporary shoring shall be used. All walls must follow the design guidelines established in the TDOT Earth Retaining Structures Manual (version available at time of letting).

The 1:1 temporary construction slope should be backfilled with select backfill as specified later in this report. Refer to the enclosed Select Granular Backfill Material Table for engineering properties. The Engineer shall approve potential backfill materials before use. The backfill should extend vertically to the full height of the wall.

The backfill is to be placed in accordance with TDOT's Standard Specifications for Road and Bridge Construction (March 1, 2006). Prior to fill placement, the foundation soil and areas receiving fill shall be inspected by the Engineer. Any soft zones or unsuitable materials shall be removed and the cavity backfilled with approved fill materials.

GEOTECHNICAL DESIGN PROPERTIES AND PARAMETERS FOR BACKFILL MATERIAL

Backfill Material	Undrained Condition (Short Term)			Drained Condition (Long Term)		
	ϕ (°)	Cohesion (psf)	Density (pcf)	ϕ (°)	Cohesion (psf)	Density (pcf)
Coarse grained (select)	34	0	-	34	0	-
Fine grained (local)	0	1000	120	28	0	120

The sliding coefficient values shall be as follows for Cast-in-Place or MSE walls:

Fine grained material: 0.30
Select granular material: 0.50

The select fill shall conform to the specifications outlined in Item 4.5 of Section F, Chapter 3 of the TDOT Earth Retaining Structures Manual (version available at time of letting). It should also be reasonably free (maximum of 0.1%) from organic and otherwise deleterious materials. To utilize the angle of internal friction (ϕ) of the select backfill, the backfill must extend behind the wall for a minimum zone formed by a 1:1 slope behind the back edge of footing or reinforced zone. The unit weight of the select backfill is to be determined by contractor/wall designer depending upon the actual backfill material used.

FACTORS OF SAFETY

The following safety factors should be utilized upon conducting the wall design.

Mode of Failure	Minimum Safety Factors	
	Non-Seismic Condition	Seismic Condition
Sliding	1.50	1.13
Overturning	2.00	1.50
Bearing Capacity	2.50 For MSE Walls	1.88
	3.00 For All Other Types	2.25

BEARING CAPACITY RECOMMENDATIONS

The maximum gross allowable bearing pressure is as follows:

Station 10+00 to near 11+80 (bottom of footing = 464/462) = 1000 psf
(based on ultimate bearing pressure of 3000 psf and a Safety Factor of 3.0)
Station 11+80 to near 12+50 (bottom of footing = 461) = 550 psf
(based on ultimate bearing pressure of 1650 psf and a Safety Factor of 3.0)
Station 12+50 to End of Wall (bottom of footing = 463) = 700 psf
(based on ultimate bearing pressure of 2100 psf and a Safety Factor of 3.0)

It is recommended that the Geotechnical Engineer be present to inspect the excavation of the footings for the retaining structures. If the allowable bearing pressure values above are not sufficient to support the wall, soil improvement will be necessary. This can be accomplished by means of undercutting the soft surficial soil and replacing this material with approved select backfill material. Please note that other methods of improvement may also be applicable. The proposed improvement scheme should be reviewed and approved by the Engineer.

Undercutting and Backfilling with Select Fill Material

In general, the amount of undercutting/backfilling will depend on the desired bearing capacity, foundation width, and the type of backfill material. For this particular wall, the recommended depth of undercut should extend to elevation 462.00 or to the elevation where all soft materials are removed, whichever is deeper. If select granular backfill material as previously specified is used (ϕ angle of 34°), then the improved bearing capacity can be as stated below:

Station	Wall Height (feet)	Foundation Requirement	Minimum Elevation of Undercut (feet)	Allowable Bearing Capacity (psf) at Specific Depth of Replacement (ft)*
Length of Wall	Up to 16	Foundation on Select Granular Backfill	462.00	2500 (based on ultimate bearing pressure of 7500 psf, Safety Factor = 3.0)

*FOR BOTH MSE AND CANTILEVER/GRAVITY WALL TYPES

To utilize the above values, the Geotechnical Engineer should verify the soil conditions at the site, as deviations may exist between the borings.
The soil replacement should extend to a minimum of 5 feet beyond the overall proposed footing width at ground surface. The excavation should be widened at 2V: 1H to the desired depth.

SPECIFIC DESIGN REQUIREMENTS
The wall shall have a drainage gutter at the top designed to carry surface runoff to either or both ends of walls. A drainage gutter typical is shown for reference; however, actual details to be provided in contractor's wall design plans. If a Concrete Cantilever Wall is used, the wall designer must provide for a drainage layer behind the wall stem with adequate drainage provided via weep holes.

SPECIAL NOTE REGARDING RETAINING WALL

Unless specifically stated otherwise in the contract plans, the bidding for, the design of and the construction of retaining walls shown in the plans shall be governed by the TDOT Earth Retaining Structures Manual (version available at time of letting). This Manual is available on the TDOT Web Site under the Information for Contractors link. This Manual shall be considered as one of those documents which the Bidder/Contractor has examined and made himself familiar with as described in Section 102.04 - Examination of the Site, the Work, the Plans, and the Specifications in the TDOT Standard Specifications for Road and Bridge Construction.

CONST. NO. 36001-3290-14

PROJECT NO.	YEAR	SHEET NO.
NHE-15(108)	2012	

REVISIONS

NO.	DATE	BY	BRIEF DESCRIPTION

STATE OF TENNESSEE
DEPARTMENT OF TRANSPORTATION

CONCEPTUAL LAYOUT
RETAINING WALL NO. 1
ALONG STATE ROUTE 15
STATION 454+12.53 TO
STATION 457+12.12
HARDIN COUNTY
2012

CORRECT Wayne G. Sieger
ENGINEER OF STRUCTURES

U-50-99

DESIGNED BY _____ DATE _____
DRAWN BY C. BERNATEK (GEOTECH) DATE 01-12
SUPERVISED BY MBC/KDM DATE 01-12
CHECKED BY _____ DATE _____

D:\Dgn\Ret\RET\RET1020A.dgn
18-JAN-2012
15:03

RET1020B.DGN

CONST. NO. 36001-3290-14

PROJECT NO.	YEAR	SHEET NO.
NHE-15(108)	2012	

REVISIONS

NO.	DATE	BY	BRIEF DESCRIPTION

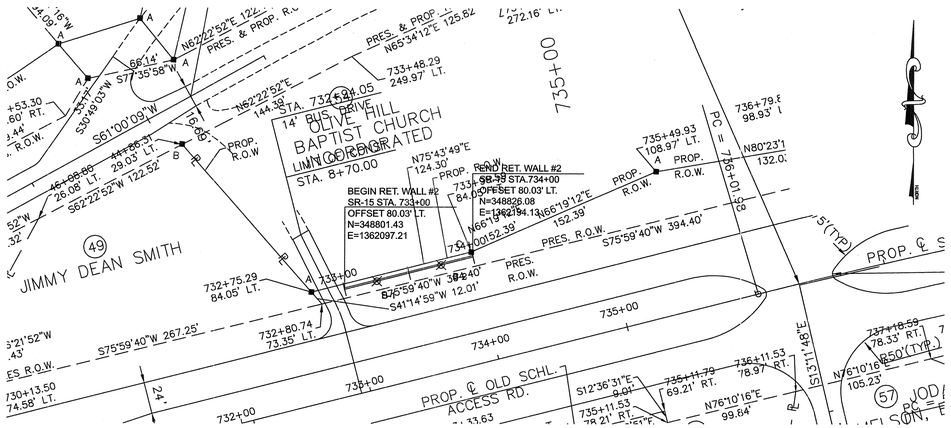

PLAN VIEW - RETAINING WALL #2 @ OLIVE HILL
SCALE: 1"=50'

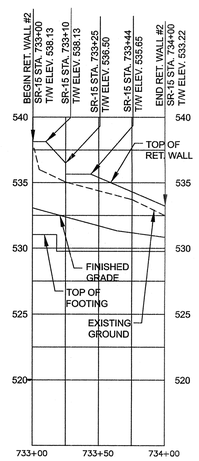

PROFILE VIEW - RETAINING WALL #2 @ OLIVE HILL
SCALE: 1"=50' HORIZ. 1"=5' VERT.

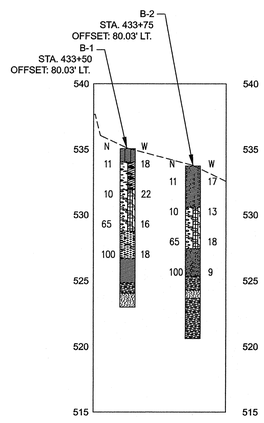

GEOTECHNICAL INFORMATION @ OLIVE HILL
SCALE: 1"=5' VERT.

LEGEND:

- HIGH PLASTICITY CLAY
- CLAY
- SANDY CLAY
- CLAYEY SAND
- SAND
- GRAVELY CLAY OR CLAYEY GRAVEL
- GRAVEL
- SANDY GRAVEL
- SILTY SAND
- SILTY CLAY
- ELASTIC SILT
- CLAYEY SILT
- LIMESTONE
- SHALE
- LIMESTONE WITH INTERBEDDED SHALE
- SANDSTONE
- SHALE WITH SANDSTONE
- VOID UNDER GROUND
- SILTY GRAVEL
- INTERBEDDED CHERT LIMESTONE AND SHALE
- ORGANIC MATERIAL
- = ROCK

NOTES:

1. "BACK OF WALL" PERTAINS TO THE R.O.W. SIDE OF THE WALL.
2. "FACE OF WALL" PERTAINS TO THE ROADWAY SIDE OF THE WALL.

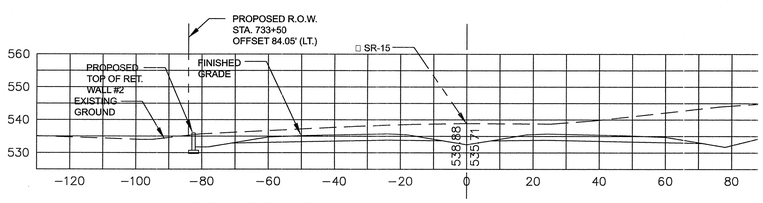

TYPICAL SECTION (STA. 733+50)
SCALE: 1"=20' HORIZ. 1"=20' VERT.

ESTIMATED QUANTITIES

604-07.02
RETAINING WALL NO. 2
S.F.
547

ACCEPTABLE WALL TYPES

The different types of earth retaining structures listed below are considered suitable for the site.

- Gravity Wall
- MSE Wall (applicability to be determined by space constraints)
- Gabion
- Reinforced Soil Slope (RSS)
- Cast-in-Place Concrete Cantilever Gravity Wall

EXCAVATION AND BACKFILL

Temporary construction slopes should have a maximum allowable slope of 1:1. The Contractor shall ensure that these temporary back slopes are not and do not become unstable. If a slope is unstable, becomes unstable, or is unacceptable for other reasons, then temporary shoring shall be used. All walls must follow the design guidelines established in the TDOT Earth Retaining Structures Manual (version available at time of letting).

The 1:1 temporary construction slope should be backfilled with select backfill as specified later in this report. Refer to the enclosed Select Granular Backfill Material Table for engineering properties. The Engineer shall approve potential backfill materials before use. The backfill should extend vertically to the full height of the wall.

The backfill is to be placed in accordance with TDOT's Standard Specifications for Road and Bridge Construction (March 1, 2006). Prior to fill placement, the foundation soil and areas receiving fill shall be inspected by the Engineer. Any soft zones or unsuitable materials shall be removed and the cavity backfilled with approved fill materials.

GEOTECHNICAL DESIGN PROPERTIES AND PARAMETERS FOR BACKFILL MATERIAL

Backfill Material	Undrained Condition (Short Term)			Drained Condition (Long Term)		
	ϕ (°)	Cohesion (psf)	Density (pcf)	ϕ (°)	Cohesion (psf)	Density (pcf)
Coarse-grained (select)	34	0	-	34	0	-
Fine-grained (local)	0	1000	120	28	0	120

The sliding coefficient values shall be as follows for Cast-in-Place or MSE walls:

Fine grained material: 0.30
Select granular material: 0.50

The select fill shall conform to the specifications outlined in Item 4.5 of Section F, Chapter 3 of the TDOT Earth Retaining Structures Manual (version available at time of letting). It should also be reasonably free (maximum of 0.1%) from organic and otherwise deleterious materials. To utilize the angle of internal friction (of the select backfill, the backfill must extend behind the wall for a minimum zone formed by a 1:1 slope behind the back edge of footing or reinforced zone. The unit weight of the select backfill is to be determined by contractor/wall designer depending upon the actual backfill material used.

FACTORS OF SAFETY

The following safety factors should be utilized upon conducting the wall design.

Mode of Failure	Minimum Safety Factors	
	NonSeismic Condition	Seismic Condition
Sliding	1.50	1.13
Overtuning	2.00	1.50
Bearing Capacity	2.50 For MSE Walls	1.88
	3.00 For All Other Types	2.25

BEARING CAPACITY RECOMMENDATIONS

The maximum gross allowable bearing pressure is as follows:

Station 733+00 to near 733+40 (bottom of footing = 530) = 1500 psf (based on ultimate bearing pressure of 4500 psf and a Safety Factor of 3.0)
Station 733+40 to End of Wall (bottom of footing = 527) = 2800 psf
(based on ultimate bearing pressure of 8400 psf and a Safety Factor of 3.0)

It is recommended that the Geotechnical Engineer be present to inspect the excavation of the footings for the retaining structures. If the allowable bearing pressure values above are not sufficient to support the wall, soil improvement will be necessary. This can be accomplished by means of undercutting the marginal soils and replacing this material with approved select backfill material. Please note that other methods of improvement may also be applicable. The proposed improvement scheme should be reviewed and approved by the Engineer.

Undercutting and Backfilling with Select Fill Material

In general, the amount of undercutting/backfilling will depend on the desired bearing capacity, foundation width, and the type of backfill material. For this particular wall, the recommended depth of undercut should extend to elevation 528.00 or to the elevation where all loose materials are removed, whichever is deeper. If select granular backfill material as previously specified is used (ϕ angle of 34°), then the improved bearing capacity can be as stated in the table below:

Station	Wall Height (feet)	Foundation Requirement	Minimum Elevation of Undercut (feet)	Allowable Bearing Capacity (psf) at Specific Depth of Replacement (ft)*
733+00 to 733+40	Up to 6	Foundation on Select Granular Backfill	528.00	2800 (based on ultimate bearing pressure of 8400 psf, Safety Factor = 3.0)
733+40 to End of Wall		Soil	-----	

*FOR BOTH MSE AND CANTILEVER/GRAVITY WALL TYPES

To utilize the above values, the Geotechnical Engineer should verify the soil conditions at the site, as deviations may exist between the borings.

The soil replacement should extend to a minimum of 5 feet beyond the overall proposed footing width at ground surface. The excavation should be widened at 2V: 1H to the desired depth.

SPECIFIC DESIGN REQUIREMENTS
The wall shall have a drainage gutter at the top designed to carry surface runoff to either or both ends of walls. A drainage gutter typical is shown for reference; however, actual details to be provided in contractor's wall design plans. If a Concrete Cantilever Wall is used, the wall designer must provide for a drainage layer behind the wall stem with adequate drainage provided via weep holes.

SPECIAL NOTE REGARDING RETAINING WALL

Unless specifically stated otherwise in the contract plans, the bidding for, the design of and the construction of retaining walls shown in the plans shall be governed by the TDOT Earth Retaining Structures Manual (version available at time of letting). This Manual is available on the TDOT Web Site under the Information for Contractors link. This Manual shall be considered as one of those documents which the Bidder/Contractor has examined and made himself familiar with as described in Section 102.04 - Examination of the Site, the Work, the Plans, and the Specifications in the TDOT Standard Specifications for Road and Bridge Construction.

STATE OF TENNESSEE
DEPARTMENT OF TRANSPORTATION

CONCEPTUAL LAYOUT
RETAINING WALL NO. 2
ALONG STATE ROUTE 15
STATION 733+00.00 TO
STATION 734+00.00
HARDIN COUNTY
2012

CORRECT Wayne G. Sieger
ENGINEER OF STRUCTURES

U-50-100

DESIGNED BY _____ DATE _____
DRAWN BY C. BERNATEK (GEOTECH) DATE 01-12
SUPERVISED BY MBC/KDM DATE 01-12
CHECKED BY _____ DATE _____

D:\Dgn\Ret\RET1020B.dgn
03-JAN-2012
14:51

RET1020DET.DGN

CONST. NO. 36001-3290-14

PROJECT NO.	YEAR	SHEET NO.
NHE-15(108)	2012	

REVISIONS

NO.	DATE	BY	BRIEF DESCRIPTION

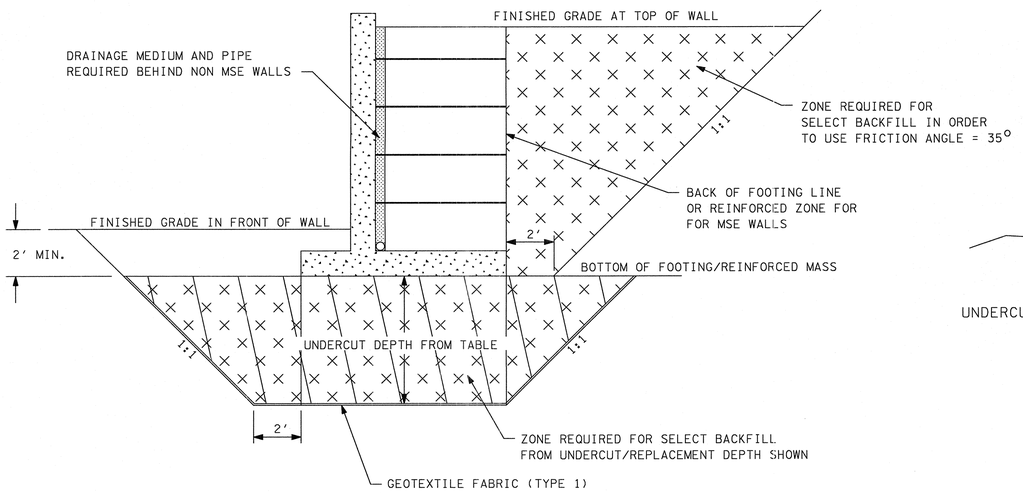

MSE WALL

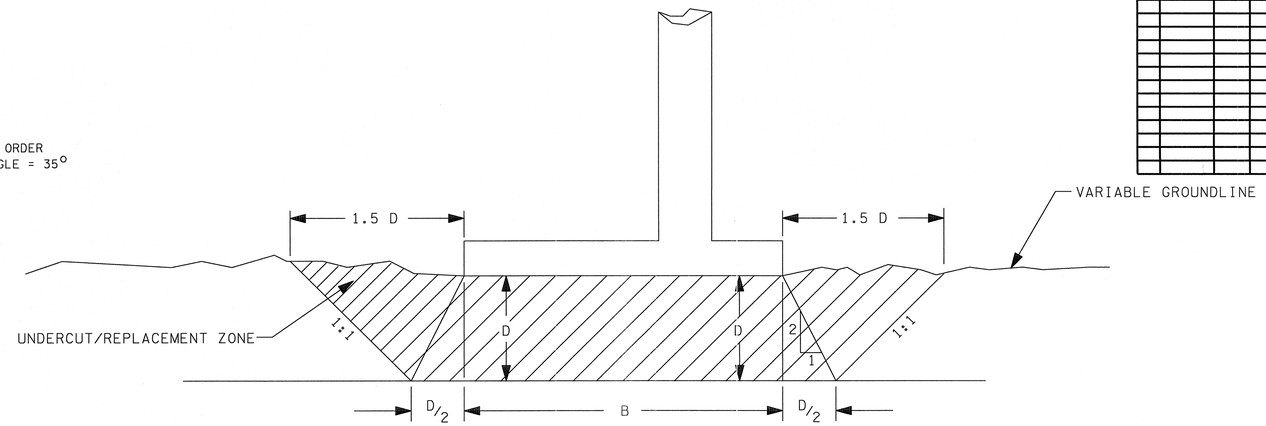

SCHEMATIC FOR UNDERCUT/REPLACEMENT -WHERE REQUIRED

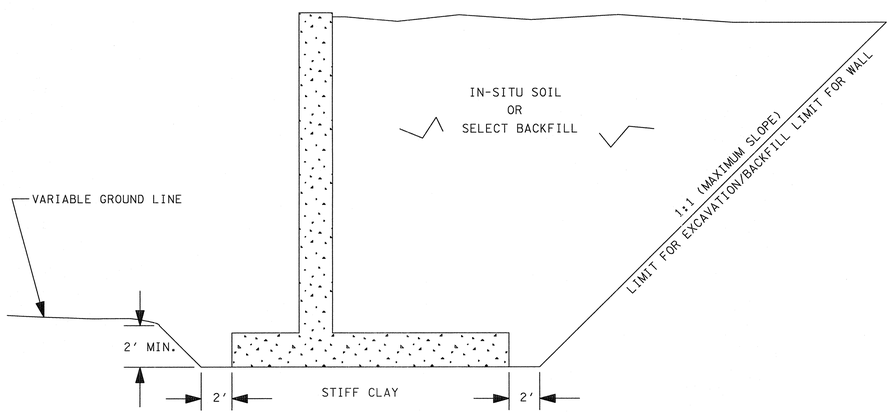

SPREAD FOOTING FOUNDATION ON SOIL

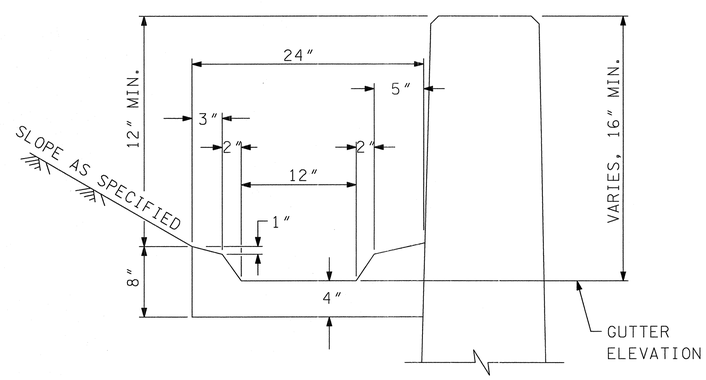

TYPICAL GUTTER DETAIL

STATE OF TENNESSEE
DEPARTMENT OF TRANSPORTATION

RETAINING WALL
NOS. 1 & 2 DETAILS
ALONG STATE ROUTE 15
HARDIN COUNTY
2012

DESIGNED BY _____ DATE _____
DRAWN BY C. BERNATEK (GEOTECH) DATE 01-12
SUPERVISED BY MBC/KDM DATE 01-12
CHECKED BY _____ DATE _____

CORRECT Wayne G. Sieger
ENGINEER OF STRUCTURES

U-50-101

D:\Ogr\Ret\RET\RET1020DET.dgn
01-12-2012
14:59