GN1021R1.DGN

GENERAL NOTES

SPECIFICATIONS: STANDARD ROAD AND BRIDGE SPECIFICATIONS OF THE TENNESSEE DEPARTMENT OF TRANSPORTATION (MARCH 1, 2006 EDITION).

LOADING: HL-93 LIVE LOADING, SEISMIC CATEGORY A WITH AS = 0.126, SDS = 0.294, SD1 = 0.097, (1000 YEAR RETURN PERIOD). DEAD LOAD INCLUDES 35 LB/FTy FOR FUTURE WEARING SURFACE.

DESIGN SPECIFICATIONS: AASHTO LRFD FIFTH EDITION 2010, WITH ADDENDA, AND THE 2009 AASHTO GUIDE SPECIFICATIONS FOR LRFD SEISMIC BRIDGE DESIGN, EDITION 1 (WITH INTERIMS.)

CONCRETE: TO BE CLASS "A" (CAST IN PLACE) f′c = 3,000 psi EXCEPT AS NOTED OTHERWISE.

CLASS "D" CONCRETE FOR BRIDGE DECKS SHALL BE IN ACCORDANCE WITH SECTION 604 OF THE STANDARD SPECIFICATIONS.

BRIDGE DECK SURFACE FINISH: TO BE IN ACCORDANCE WITH NOTE "C" IN ARTICLE 604.22 OF THE STANDARD SPECIFICATIONS.

BRIDGE DECK FORMS: BRIDGE DECK FORMS FOR CONCRETE DECKS SHALL BE CONSTRUCTED USING EITHER REMOVABLE FORMS OR PERMANENT FORMS. PERMANENT FORMS MAY BE EITHER REMAIN-IN-PLACE STEEL OR PRECAST, PRESTRESSED CONCRETE PANELS. IN EITHER CASE, FORMS SHALL BE ATTACHED BY MEANS OTHER THAN WELDING TO MAIN STRUCTURAL MEMBERS OR REINFORCING STEEL. TEMPORARY ERECTION DIAPHRAGMS MUST BE USED AT THE ENDS OF PRECAST CONCRETE GIRDERS WHERE END DIAPHRAGMS, SUPPORT DIAPHRAGMS, OR ABUTMENT BACKWALLS ARE TO BE POURED CONCURRENTLY WITH THE DECK AND SHALL BE PROVIDED ELSEWHERE IN ACCORDANCE WITH THE SPECIFICATIONS TO PREVENT GIRDER ROTATION. SEE STANDARD DRAWINGS STD-4-1 THRU 4, STD-14-1 AND ARTICLE 604.05 OF THE STANDARD SPECIFICATIONS.

SLAB OVERHANGS SUPPORTED BY BULB-TEE BEAMS: IT IS RECOMMENDED THAT SPACING OF OVERHANG BRACKETS FOR BULB-TEE BEAMS NOT EXCEED 2′-0" CENTER TO CENTER.

SPECIAL NOTE: FOUNDATIONS FOR BENTS SHALL BE EXCAVATED TO THE BOTTOM OF FOOTING ELEVATIONS SHOWN; ROD SOUNDINGS SHALL THEN BE MADE AS DIRECTED BY THE ENGINEER. FROM THE RESULTS OBTAINED, THE ENGINEER WILL DECIDE IF PILES WILL BE USED OR THE FOOTINGS CARRIED TO ROCK. COST OF ROD SOUNDING TO BE INCLUDED IN THE UNIT PRICE BID FOR OTHER ITEMS. NO REINFORCING STEEL FOR BENT COLUMNS OR FOOTINGS SHALL BE ORDERED UNTIL FINAL ELEVATIONS HAVE BEEN DETERMINED.

BRIDGE RAIL SYSTEM: BUILD BRIDGE RAILINGS ACCORDING TO STANDARD DRAWING STD-1-1SS. THE RAILING SHALL BE FORMED AND CAST PLUMB, NOT PERPENDICULAR TO THE SLAB. THE DIMENSIONS AT THE TRAFFIC FACE SHALL BE KEPT CONSTANT, WITH VARIATION DUE TO CROSS SLOPE ACCOMMODATED AT THE REAR FACE.

NOTE: THE CONTRACTOR SHALL PROVIDE 100% CONVENTIONAL FALL PROTECTION FOR WORKERS INSTALLING DECKING ABOVE 15 FEET.

SHOP DRAWINGS: SEE SECTION 105.02 OF THE STANDARD SPECIFICATIONS.

RIP-RAP: MACHINED RIP-RAP SHALL BE CLASS "A-1" IN ACCORDANCE WITH SECTION 709 OF THE STANDARD SPECIFICATIONS AND SHALL BE MEASURED AND PAID FOR UNDER ROADWAY ITEM 709-05.06.

MACHINED RIP-RAP: MACHINED RIP-RAP FOR SLOPE PROTECTION SHALL BE 2" TO 6" IN SIZE UNIFORMLY GRADED AND MEET THE REQUIREMENTS OF SECTION 709 OF THE STANDARD SPECIFICATIONS FOR ROAD AND BRIDGE CONSTRUCTION AND SHALL BE MEASURED AND PAID FOR UNDER ROADWAY ITEM 709-05.05 - TON

FINISHING CONCRETE SURFACES: CONCRETE FINISHING SHALL BE IN ACCORDANCE WITH SECTION 604.21 OF THE TENNESSEE STANDARD SPECIFICATION. A CLASS I FINISH FOLLOWED BY AN APPLIED TEXTURE FINISH SHALL BE USED IN LIEU OF A CLASS II FINISH. NO TEXTURE FINISH SHALL BE APPLIED PRIOR TO COMPLETION OF PAVING AND HAULING OPERATIONS AT THE BRIDGE SITE. THE APPLIED TEXTURE FINISH SHALL BE MEASURED AND PAID FOR UNDER ITEM NO. 604-04.01.

REINFORCING STEEL: SHALL BE ASTM A615 GRADE 60 UNLESS NOTED OTHERWISE. SEE SECTION 604 AND 907 OF THE STANDARD SPECIFICATIONS.

NOTE: THE FILLS AT THE ENDS OF THE BRIDGE SHALL BE IN PLACE AND THOROUGHLY COMPACTED BEFORE ANY ABUTMENT PILES ARE DRIVEN.

PILES: TO BE HP10 × 42 DRIVEN TO REFUSAL OR A MINIMUM BEARING OF 55 TONS FOR THE ABUTMENTS AND 55 TONS FOR THE BENTS.

VALUE ENGINEERING ALTERNATE BRIDGE DESIGN CRITERIA: ALTERNATE BRIDGE DESIGN PROPOSALS MAY NOT DIMINISH THE FUNCTIONAL OR STRUCTURAL EQUIVALENCY OF THE BRIDGE AND MUST MEET OR EXCEED BOTH THE SERVICE LEVEL AND ULTIMATE CAPACITIES OF THE CONTRACT PLANS STRUCTURE. ADDITIONALLY, THE WATERWAY OPENING AND FLOOD CLEARANCES MAY NOT BE REDUCED; FOR GRADE SEPARATIONS, THE HORIZONTAL CLEARANCES MAY NOT BE REDUCED, NOR MAY THE VERTICAL CLEARANCES BE LESS THAN THE MINIMUM ACCEPTABLE FOR THE TYPE FACILITY CROSSED.

FOUNDATION PREPARATION: SEE SECTION 204 OF THE STANDARD SPECIFICATIONS. IF COFFERDAMS ARE REQUIRED, THEY SHALL BE IN ACCORDANCE WITH SECTION 204.09 OF THE STANDARD SPECIFICATIONS.

NOTE: PILES SHALL BE EQUIPPED WITH CAST STEEL POINTS. ALSO, SEE STANDARD DRAWING STD-5-1 FOR ADDITIONAL NOTES.

CONST. NO. 36001-3290-14

PROJECT NO.	YEAR	SHEET NO.
NHE-15(108)	2012	

REVISIONS

NO.	DATE	BY	BRIEF DESCRIPTION
1	9/25/14	DJS	REV. REMOVAL NOTE

ESTIMATED QUANTITIES

NOTE	ITEM NO.	DESCRIPTION	UNIT	GRAND TOTAL	LEFT LANE TOTAL	LEFT LANE SUPERSTRUCTURE	LEFT LANE ABUTMENT NO. 1	LEFT LANE BENT NO. 1	LEFT LANE BENT NO. 2	LEFT LANE ABUTMENT NO. 2	RIGHT LANE TOTAL	RIGHT LANE SUPERSTRUCTURE	RIGHT LANE ABUTMENT NO. 1	RIGHT LANE BENT NO. 1	RIGHT LANE BENT NO. 2	RIGHT LANE ABUTMENT NO. 2
(11)	202-04.02	REMOVAL OF STRUCTURES (EXISTING BRIDGE NO. 36-SR15-20.85)	L.S.	1												
(2)	204-02.01	DRY EXCAVATION (BRIDGES)	C.Y.	580	290		86	73	47	84	290		86	73	47	84
(2)	204-03.01	WET EXCAVATION (BRIDGES)	C.Y.	892	446			223	223		446			223	223	
(10)	204-10.05	FOUNDATION PREPARATION (BENT NO. 1 LT. LN., STA. 748+14.08)	L.S.	1	1			1								
(10)	204-10.06	FOUNDATION PREPARATION (BENT NO. 2 LT. LN., STA. 748+97.42)	L.S.	1	1				1							
(10)	204-10.07	FOUNDATION PREPARATION (BENT NO. 1 RT. LN., STA. 748+14.08)	L.S.	1							1			1		
(10)	204-10.08	FOUNDATION PREPARATION (BENT NO. 2 RT. LN., STA. 748+97.42)	L.S.	1							1				1	
(8)	303-01.02	GRANULAR BACKFILL (BRIDGES)	TON	60	30		15			15	30		15			15
	604-02.03	EPOXY COATED REINFORCING STEEL	LB.	155,676	77,838	74,622	1,608			1,608	77,838	74,622	1,608			1,608
(7)	604-03.01	CLASS 'A' CONCRETE (BRIDGES)	C.Y.	604	302		51	102	99	50	302		51	102	99	50
	604-03.02	STEEL BAR REINFORCEMENT (BRIDGES)	LB.	86,938	43,469	1,459	5,670	15,767	15,168	5,405	43,469	1,459	5,670	15,767	15,168	5,405
(1)	604-03.04	PAVEMENT AT BRIDGE ENDS	S.Y.	430	215						215					
	604-03.09	CLASS 'D' CONCRETE (BRIDGE DECK)	C.Y.	628	314	314					314	314				
	604-04.01	APPLIED TEXTURE FINISH (NEW STRUCTURES)	S.Y.	2,627	1,312	1,037	31	113	101	30	1,315	1,037	31	115	102	30
	604-05.31	BRIDGE DECK GROOVING (MECHANICAL)	S.Y.	2,584	1,292						1,292					
	606-02.03	STEEL PILES (10 INCH)	L.F.	3,438	1,719		450	378	459	432	1,719		450	378	459	432
(12)	606-02.06	PILE TIPS (STEEL PILES, 10 INCH)	EA.	144	72		9	27	27	9	72		9	27	27	9
(5)(4)	615-01.10	PRESTRESSED CONCRETE BULB-TEE BEAM (6" WEB) (BT-54)	L.F.	2,456	1,228						1,228					
(9)	620-05.01	CONCRETE PARAPET SINGLE SLOPE (STD-1-1SS)	L.F.	1,132	566						566					
(6)	710-09.01	6" PERF. PIPE WITH VERTICAL DRAIN SYSTEM	L.F.	264	132		66			66	132		66			66
	710-09.02	6" PIPE UNDERDRAIN	L.F.	71	35		18			17	36		19			17

(1) NOTE: PRIOR TO CONSTRUCTION OF THE PAVEMENT AT BRIDGE ENDS, THE CONTRACTOR SHALL SUBMIT A PROPOSED BILL OF STEEL TO THE ENGINEER FOR APPROVAL.

(2) NOTE: EXCAVATION BASED ON FINAL PROFILE AT ABUTMENTS AND EXISTING GROUND AT BENTS.

(3) NOTE: THE COST OF BITUMINOUS-FIBERBOARD AND ALL MISCELLANEOUS JOINT MATERIAL TO BE INCLUDED IN THE UNIT PRICE BID FOR OTHER ITEMS.

(4) NOTE: COST OF ELASTOMERIC PADS AND RUBBER BONDING CEMENT TO BE INCLUDED IN THE UNIT PRICE BID FOR THE PRESTRESSED BEAM.

(5) NOTE: INTERMEDIATE DIAPHRAGMS SHALL BE PAID FOR IN ACCORDANCE WITH STANDARD DRAWING STD-14-1.

(6) NOTE: COST OF POLYETHYLENE SHEETING AND ALL MISCELLANEOUS ITEMS NECESSARY FOR INSTALLATION TO BE INCLUDED IN THE UNIT PRICE BID FOR PERFORATED PIPE.

(7) NOTE: THE COST OF ALL MATERIALS AND LABOR NECESSARY FOR THE INSTALLATION OF 76 ANCHOR BOLT ASSEMBLIES SHALL BE INCLUDED IN THE UNIT PRICE BID FOR CLASS "A" CONCRETE (BRIDGES), ITEM NO. 604-03.01.

(8) NOTE: GRANULAR BACKFILL SHALL BE CLASS "A" GRADING "D" MATERIAL. SEE STANDARD DRAWING STD-10-1.

(9) NOTE: COST OF 5 BRIDGE DECK DRAINS TO BE INCLUDED IN THE UNIT PRICE BID FOR THE PARAPET.

(10) NOTE: SEE FOUNDATION PREPARATION NOTE THIS SHEET.

△1 (11) NOTE: LUMP SUM: TO INCLUDE COMPLETE REMOVAL OF EXISTING BRIDGE NO. 36-SR15-20.85 TO NATURAL GROUND BETWEEN STA. 748+33.00 AND STA. 750+03.00. MAINTAIN TRAFFIC ON EXISTING STRUCTURE DURING PHASE CONSTRUCTION. EXISTING BRIDGE IS 142′-6" LONG, 34′-6" WIDE AND CONSISTS OF 5 SPANS OF CONCRETE DECK GIRDERS AND BOX BEAMS WITH CONCRETE SUBSTRUCTURES. TDOT MAINTENANCE WILL REVIEW AND RECLAIM ANY SLAVAGEABLE ITEMS ON EXISTING STRUCTURES. COORDINATION WITH REGION 4 BRIDGE REPAIR (731-935-0247) SHOULD BE MADE PRIOR TO BRIDGE REMOVAL.

(12) NOTE: THE UNIT PRICE BID FOR THE CAST STEEL POINTS SHALL INCLUDE FURNISHING AND INSTALLATION TO PILES.

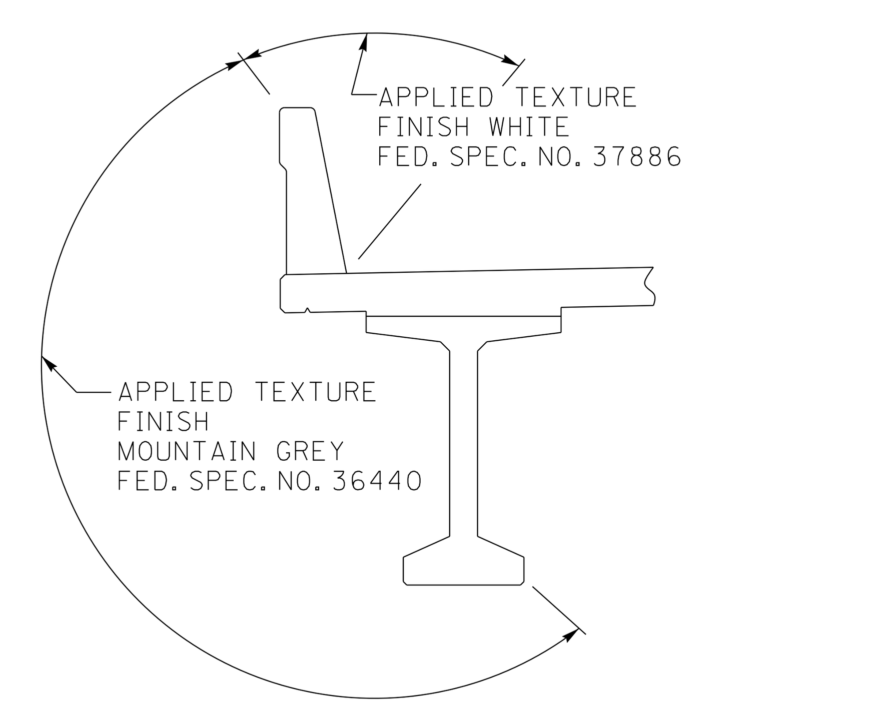

APPLIED TEXTURE FINISH SKETCH

NOTE: IN ADDITION TO THE SURFACES SHOWN IN THE APPLIED TEXTURE FINISH SKETCH ALL EXPOSED SURFACES OF WINGWALLS, ABUTMENT BEAMS, BENTS AND EXTERIOR PORTIONS OF ENDWALLS ARE TO RECEIVE AN APPLIED TEXTURE FINISH (MOUNTAIN GREY, FED. SPEC. NO. 36440).

DESIGNED BY D. SHIKE DATE 9-10
DRAWN BY P. MOSHER DATE 10-11
SUPERVISED BY MBC/KDM DATE 10-11
CHECKED BY DJS DATE 1-12

BRIDGE NO. 2

STATE OF TENNESSEE
DEPARTMENT OF TRANSPORTATION

GENERAL NOTES AND ESTIMATED QUANTITIES
STATE ROUTE 15
OVER
BIGBEE BRANCH
STATION 748+55.75
LOG MILE 20.85
HARDIN COUNTY
2012

Kathleen McLaughlin — KATHLEEN McLAUGHLIN, Registered Engineer, STATE OF TENNESSEE, No. 101334, 9/29/2014

CORRECT Wayne J. Seger
ENGINEER OF STRUCTURES

U-52-114