TENNESSEE D.O.T.
DESIGN DIVISION
FILE NO.

TENN.	YEAR	SHEET NO.
	2014	1
FED. AID PROJ. NO.		
STATE PROJ. NO.	71006-4111-04	

STATE OF TENNESSEE
DEPARTMENT OF TRANSPORTATION
BUREAU OF ENGINEERING

PUTNAM COUNTY

STATE ROUTE 56 OVER INTERSTATE 40

BRIDGE REPAIR

STATE HIGHWAY NO. 56 F.A.H.S. NO.

Index Of Sheets

SHEET NO.	DESCRIPTION
1	TITLE SHEET
1A	PROJECT COMMITMENT
2	BRIDGE GENERAL NOTES AND ESTIMATED QUANTITIES
2A	ESTIMATED ROADWAY QUANTITIES AND GENERAL NOTES
2B	ROADWAY NOTES AND DETAILS
2C	TRAFFIC CONTROL PLAN - PHASE I
2D	TRAFFIC CONTROL PLAN - PHASE II
2E	TRAFFIC CONTROL PLAN - I40
2F	EROSION CONTROL DETAILS AND NOTES

DRAWING NO.	CURRENT REVISION DATE	DESCRIPTION
		STANDARD ROADWAY DRAWINGS
RD-A-1	12-18-99	STANDARD ABBREVIATIONS
RD-L-1	10-26-94	STANDARD LEGEND
RD-L-3	4-15-04	STANDARD LEGEND FOR SIGNALIZATION AND LIGHTING
RD-L-4	4-15-04	STANDARD LEGEND FOR SIGNALIZATION AND LIGHTING
RD-L-5	5-01-08	STANDARD LEGEND FOR EROSION PREVENTION AND SEDIMENT CONTROL
		SAFETY APPURTENANCES AND FENCE
S-GR31-1		W-BEAM GUARDRAIL
S-GRC-1		GUARDRAIL CONNECTION TO BRIDGE ENDS OR BARRIER WALL
S-PL-1		SAFETY PLAN AT ROADSIDE HAZARDS
S-PL-3		SAFETY PLAN: MINIMUM INSTALLATION AT BRIDGE ENDS
S-GRT-2		TYPE 38 GUARDRAIL TERMINAL
S-GRT-2R		EARTH PAD FOR TYPE 38 TERMINAL (RETROFIT)
		TRAFFIC CONTROL APPURTENANCES
T-FAB-1	5-27-97	FLASHING YELLOW ARROW BOARD
T-M-1	11-01-11	DETAILS OF PAVEMENT MARKINGS FOR CONVENTIONAL ROADS AND MARKING ABBREVIATIONS
T-M-2	1-15-13	DETAILS OF PAVEMENT MARKINGS FOR CONVENTIONAL ROADS
T-M-4	11-01-11	STANDARD INTERSECTION PAVEMENT MARKINGS
T-PBR-1	6-30-09	INTERCONNECTED PORTABLE BARRIER RAIL
T-PBR-2	11-01-11	DETAIL FOR VERTICAL PANELS AND FLEXIBLE DELINEATORS
T-SG-1	11-01-11	WOODEN POLE DETAILS FOR SPAN MOUNTED SIGNALS
T-SG-2	7-29-04	LOOP LEAD-INS CONDUIT AND PULL BOXES
T-SG-3	11-11-04	STANDARD NOTES AND DETAILS OF INDUCTIVE LOOPS
T-SG-3A		ALTERNATE DETECTION DETAILS
T-SG-4		SPAN WIRE AND MESSENGER CABLE DETAILS
T-SG-5	12-04-13	CONTROLLER CABINET DETAILS
T-SG-7	11-01-11	SIGNAL HEAD ASSEMBLIES AND PEDESTRIAN PUSH BUTTON DETAILS
T-SG-7A	11-01-11	TYPICAL SIGN HEAD PLACEMENT
T-SG-12	11-01-11	TYPICAL WIRING FOR SIGNAL HEADS AND DETECTION LOOPS
T-WZ-10	4-02-12	ADVANCE ROAD WORK SIGNING ON HIGHWAYS AND FREEWAYS
T-WZ-11	3-13-09	ONE LANE CLOSURE DETAIL ON DIVIDED HIGHWAYS
T-WZ-16	3-13-09	LANE SHIFT ON DIVIDED HIGHWAYS AND FREEWAYS AT TWO LANE BRIDGE RECONSTRUCTION SITE
T-WZ-32	10-29-13	TRAFFIC CONTROL PLAN SIGNAL LAYOUT FOR TRAFFIC SIGNAL AT TWO LANE BRIDGE RECONSTRUCTION SITE
T-WZ-33	5-27-98	TRAFFIC CONTROL PLAN SIGNAL LAYOUT FOR CLOSE INTERSECTION CONDITIONS USING TRAFFIC SIGNAL AT TWO LANE BRIDGE RECONSTRUCTION SITE
T-WZ-34	9-01-05	TRAFFIC CONTROL PLAN GENERAL NOTES FOR TRAFFIC SIGNAL AT TWO LANE BRIDGE RECONSTRUCTION SITE
T-WZ-35	4-02-12	TRAFFIC CONTROL PLAN PAY ITEM AND SIGN DETAILS FOR TRAFFIC SIGNAL AT TWO LANE BRIDGE RECONSTRUCTION SITE
		EROSION PREVENTION & SEDIMENT CONTROL
EC-STR-2	8-01-12	SEDIMENT FILTER BAGS
EC-STR-3C	8-01-12	SILT FENCE WITH WIRE BACKING
EC-STR-3E	4-01-08	SILT FENCE FABRIC JOINING DETAILS

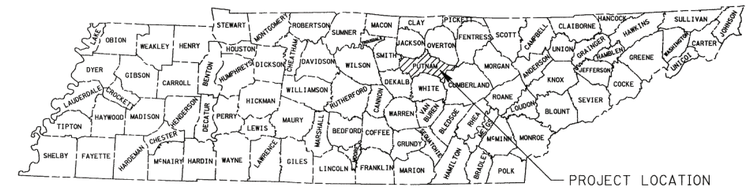

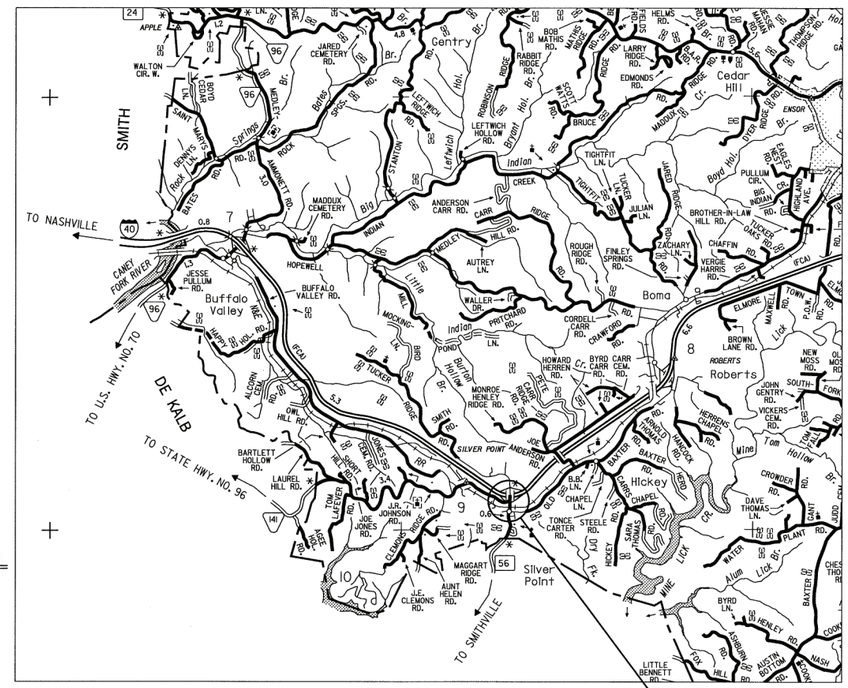

NOT TO SCALE

STATE ROUTE 56 OVER INTERSTATE 40
BRIDGE NO. 71-SR056-00.54

ROUTE	ADT	YEAR	POSTED SPEED LIMIT
STATE ROUTE 56	4098	2014	55 MPH

LIST OF BRIDGE DRAWINGS

DWG. NO.	REV.	DESCRIPTION
BR-116-130		LAYOUT OF BRIDGE TO BE REPAIRED
BR-116-131		BRIDGE GENERAL NOTES AND ESTIMATED QUANTITIES
BR-116-132		PHASED CONSTRUCTION DETAILS
BR-116-133		SUPERSTRUCTURE
BR-116-134		SLAB PLAN & DETAILS
BR-116-135		FRAMING PLAN & DETAILS
BR-116-136		WING REPLACEMENT DETAILS
BR-116-137		CONCRETE REPAIRS
BR-116-138		EPOXY INJECTION DETAILS

LIST OF REFERENCE DRAWINGS

(TO BE PRINTED WITH PLANS)

DWG. NO.	DESCRIPTION
BR-8-3	1993 BRIDGE REPAIRS
G-3-27A THRU G-3-27C	1985 BRIDGE REPAIRS
G-3-27 THRU G-3-31	1958 ORIGINAL PLANS

SPECIAL NOTES

PROPOSALS MAY BE REJECTED BY THE COMMISSIONER IF ANY OF THE UNIT PRICES CONTAINED THEREIN ARE OBVIOUSLY UNBALANCED, EITHER EXCESSIVE OR BELOW THE REASONABLE COST ANALYSIS VALUE.

THIS PROJECT TO BE CONSTRUCTED UNDER THE STANDARD SPECIFICATIONS OF THE TENNESSEE DEPARTMENT OF TRANSPORTATION DATED MARCH 1, 2006 AND ADDITIONAL SPECIFICATIONS AND SPECIAL PROVISIONS CONTAINED IN THE PLANS AND IN THE PROPOSAL CONTRACT.

TDOT STRUCTURAL SPECIALIST 2 VALERIE NEWBERRY

DESIGNER TRCWW, INC. CHECKED BY W. PETRONE

P.E. NO. 71006-4111-04

PIN NO. 119956.00

STANDARD BRIDGE DRAWINGS

STD-1-1SS STD-1-2SS	06-01-11	BRIDGE RAILING SINGLE SLOPE CONCRETE PARAPET STEEL SLIDER PLATE ASSEMBLIES FOR SINGLE SLOPE CONCRETE AND BRIDGE DECK DRAIN DETAILS - 2007
STD-1-10	3-28-94	BRIDGE END DRAIN W/O PABE
STD-1-11	8-24-11	BRIDGE END DRAIN W/O PABE
STD-1-12	3-28-94	BRIDGE END DRAIN 2'X8'7" W/O PABE
STD-2-1	11-01-10	BRIDGE MOUNTED INTERCONNECTED PORTABLE BARRIER RAIL
STD-2-2		VERTICAL PANEL DETAILS
STD-4-1	4-08-05	STD. PRECAST PRESTRESSED BRIDGE DECK PANELS GENERAL DETAILS
STD-4-2	4-08-05	STD. PRECAST PRESTRESSED BRIDGE DECK PANELS DESIGN CRITERIA
STD-4-3	3-02-02	STD. PRECAST PRESTRESSED BRIDGE DECK PANELS GENERAL DETAILS
STD-4-4	6-10-96	STD. PRECAST PRESTRESSED BRIDGE DECK PANELS CONSTRUCTION DETAILS
STD-9-1	10-07-08	REINFORCING BAR SUPPORT DETAILS FOR CONCRETE SLABS

UNOFFICIAL SET

NOT FOR BIDDING

APPROVED: Paul D. Degges
PAUL D. DEGGES, CHIEF ENGINEER

DATE

APPROVED:
JOHN SCHROER, COMMISSIONER

U.S. DEPARTMENT OF TRANSPORTATION
FEDERAL HIGHWAY ADMINISTRATION

APPROVED:

DIVISION ADMINISTRATOR DATE

TENNESSEE D.O.T.
DESIGN DIVISION
FILE NO.

TYPE	YEAR	PROJECT NO.	SHEET NO.
CONST.	2014	71006-4111-04	1A

PROJECT COMMITMENTS

COMMITMENT ID	SOURCE DIVISION	DESCRIPTION	STA./LOCATION
EDHZ001	ENVIRONMENTAL	AN ASBESTOS-CONTAINING MATERIAL (ACM) SURVEY WAS CONDUCTED ON BRIDGE #71100400007, SR-56 OVER I-40 LM 0.54 (71-SR056-0.54). NO ACM WAS DETECTED. NO SPECIAL ACCOMMODATIONS FOR DEMOLITION AND WASTE DISPOSAL ARE ANTICIPATED FOR THIS BRIDGE AND THE MATERIAL CAN BE DEPOSITED IN A C&D LANDFILL. PLEASE NOTE THAT EVEN THOUGH THE SAMPLES WERE FOUND TO CONTAIN NO ASBESTOS, THE DEMOLITION CONTRACTOR IS REQUIRED TO SUBMIT THE NATIONAL EMISSION STANDARDS FOR HAZARDOUS AIR POLLUTANTS STANDARD 10-DAY NOTICE OF DEMOLITION TO THE TENNESSEE DIVISION OF AIR POLLUTION CONTROL.	

UNOFFICIAL SET

NOT FOR BIDDING

STATE OF TENNESSEE
DEPARTMENT OF TRANSPORTATION

PROJECT COMMITMENTS

BR. NO. 71-SR056-00.54

ESTIMATED BRIDGE QUANTITIES

	ITEM NO.	DESCRIPTION	UNIT	TOTAL
10 2	202-04.01	REMOVAL OF STRUCTURES (EXISTING BRIDGE)	L.S.	1
	204-02.01	DRY EXCAVATION (BRIDGES)	C.Y.	28
3	303-01.02	GRANULAR BACKFILL (BRIDGES)	TON	58
	604-02.03	EPOXY COATED REINFORCING STEEL	LBS.	51,445
5	604-03.01	CLASS "A" CONCRETE (BRIDGES)	C.Y.	17
	604-03.02	STEEL BAR REINFORCEMENT (BRIDGES)	LBS.	2073
4	604-03.09	CLASS "D" CONCRETE (BRIDGE DECK)	C.Y.	185
	604-04.01	APPLIED TEXTURE FINISH (NEW STRUCTURES)	S.Y.	538
	604-04.02	APPLIED TEXTURE FINISH (EXISTING STRUCTURES)	S.Y.	484
	604-04.03	BRIDGE END DRAINS (2'X8')	EACH	4
	604-05.31	BRIDGE DECK GROOVING (MECHANICAL)	S.Y.	675
8 1	604-10.05	CONCRETE	S.F.	72
1 9	604-10.54	CONCRETE REPAIRS	S.F.	116
1	604-10.58	EPOXY INJECTION (INJECTION)	GAL.	6
1	604-10.62	EPOXY INJECTION REPAIR (COMPLETE AND IN PLACE)	L.F.	268
7	617-02	BRIDGE DECK CRACK SEALING	L.F.	609
6	617-05	SEALANT (HMWM)	GAL.	9
	620-05.01	CONCRETE PARAPET SINGLE SLOPE (STD-1-ISS)	L.F.	446

FOOTNOTES:

(1) ITEM QUANTITY SHALL BE INCREASED, DECREASED OR ELIMINATED AS DIRECTED BY THE ENGINEER.

(2) INCLUDES COMPLETE REMOVAL OF EXISTING COMPOSITE/CONCRETE DECK AND PARAPETS (AN APPROXIMATE AREA OF 34.33' X 203.0'). ALSO INCLUDES REMOVAL OF EXISTING WINGWALLS. THE CONTRACTOR SHALL BE RESPONSIBLE FOR REMOVAL AND DISPOSAL OF ALL MATERIALS FROM THE SITE.

(3) GRANULAR BACKFILL SHALL BE CLASS "A" GRADING, "D" MATERIAL AND INCLUDES ALL COST TO BACKFILL EXCAVATED AREAS AT ABUTMENT WING CONSTRUCTION AS SHOWN ON DWG BR-116-136.

(4) INCLUDES COST OF ALL LABOR, MATERIALS AND EQUIPMENT REQUIRED TO PLACE NEW 8¼" CONCRETE SLAB, AND BEAM FILLETS.

(5) INCLUDES COST OF ALL LABOR, EQUIPMENT AND MATERIALS REQUIRED TO PLACE CONCRETE FOR FOUR (4) NEW WINGWALLS.

(6) INCLUDES ALL COST TO FURNISH THE SEALER MATERIAL (HMWM) FOR SEALING THE CONSTRUCTION JOINTS. THE SEALER SHALL BE IN ACCORDANCE WITH SPECIAL PROVISION 604CR.

(7) INCLUDES ALL COST TO INSTALL BRIDGE DECK CRACK SEALER (HMWM) AT CONSTRUCTION JOINTS. COST SHALL INCLUDE DECK & SURFACE PREPARATION, CLEANING, LABOR AND ANY MISCELLANOUS MATERIALS REQUIRED TO SEAL THE JOINTS ACCORDING TO SPECIAL PROVISION 604CR AND MANUFACTURE'S SPECIFICATIONS. THIS ITEM DOES NOT INCLUDE THE COST OF FURNISHING THE BRIDGE DECK SEALER.

(8) INCLUDES ALL COST TO REPAIR SURFACE SPALL AREAS ON SUBSTRUCTURES WITH QUICK-SET PACTHING MATERIAL.

(9) INCLUDES ALL COST TO REPAIR DELAMINATED AREAS ON SUBSTRUCTURES WITH HIGH EARLY STRENGTH CONCRETE.

(10) THIS ITEM SHALL INCLUDE ALL LABOR, EQUIPMENT, AND MATERIALS REQUIRED TO PROVIDE 100% SHIELDING AGAINST THE POTENTIAL FOR FALLING DEBRIS. COST OF SHIELDING DESIGN AND SUBMITTAL DOCUMENTS SHALL ALSO BE INCLUDED.

GENERAL NOTES

SPECIFICATIONS: STANDARD ROAD AND BRIDGE SPECIFICATIONS OF THE TENNESSEE DEPARTMENT OF TRANSPORTATION (MARCH 1, 2006 EDITION).

LOADING: HL-93 (DEAD LOADS TO INCLUDE 35 PSF FOR FUTURE OVERLAY).

DESIGN SPECIFICATIONS: AASHTO 2007 EDITION W/ ADDENDA.

CONCRETE SHALL BE:
CLASS "A", F'c=3,000 P.S.I., EXCEPTIONS NOTED OTHERWISE.

BRIDGE DECK CONCRETE SHALL BE:
CLASS "D" IN ACCORDANCE WITH SECTION 604 OF THE STANDARD SPECIFICATIONS.

BRIDGE RAIL SYSTEM: BUILD BRIDGE RAILING ACCORDING TO STANDARD DRAWING NO. STD-1-ISS. THE RAILING SHALL BE FORMED AND CAST PLUMB, NOT PERPENDICULAR TO THE SLAB. THE DIMENSIONS AT THE TRAFFIC FACE SHALL BE KEPT CONSTANT, WITH VARIATION DUE TO CROSS SLOPE ACCOMMODATED AT THE REAR FACE.

BRIDGE DECK SURFACE FINISH: TO BE IN ACCORDANCE WITH NOTE "C", SECTION 604.22 OF THE STANDARD SPECIFICATIONS. THE LIMITS OF THE GROOVING SHALL BE WITHIN ONE FOOT OF RAIL FACE FOR THE FULL LENGTH OF THE BRIDGE.

NOTE: THE CONTRACTOR SHALL PROVIDE 100% CONVENTIONAL FALL PROTECTION FOR WORKERS INSTALLING DECKING ABOVE 15 FEET.

CONCRETE CURING: ALL CONCRETE IN REPAIR AREA SHALL BE CURED ACCORDING TO THE STANDARD SPECIFICATIONS.

MECHANICAL BAR SPLICERS: MUST BE ON THE APPROVED LIST MAINTAINED BY THE DIVISION OF MATERIALS AND TESTS. THE BAR SPLICER SHALL MEET AASHTO STANDARD SPECIFICATIONS FOR MECHANICAL CONNECTION. WHEN EPOXY COATING IS REQUIRED, THE EXPOSED THREADS SHALL BE REPAIRED AFTER SPLICING ACCORDING TO THE STD. SPECIFICAITION SECTION 907. THE COST OF FURNISHING THE BAR SPLICERS, (AND EXPOXY COATING WHEN REQUIRED) INCLUDING ALL LABOR AND MATERIALS NECESSARY FOR COMPLETE INSTALLATION, SHALL BE INCLUDED IN THE UNIT PRICE BID FOR ITEM NO. 604-02.03, LBS. OR, ITEM NO. 604-03.02, LBS.

FORMS AND FALSEWORK: CONCRETE FORM WORK, FALSEWORK, AND TEMPORARY SUPPORTS SHALL BE REMOVED FROM THE JOB SITE AFTER WORK IS COMPLETED. COST OF FORMS, FALSEWORK, AND TEMPORARY SUPPORT REMOVAL SHALL BE INCLUDED IN ITEMS BID ON. THIS WORK SHALL BE COMPLETED BEFORE FINAL PAYMENT IS APPROVED.

REINFORCING STEEL: SHALL BE ASTM A615, GRADE 60 UNLESS NOTED OTHERWISE. SEE SECTIONS 604 AND 907 OF THE STANDARD SPECIFICATIONS.

GROUTED BARS IN DRILLED HOLES: HORIZONTALLY DRILLED HOLES SHALL BE DRILLED ½" IN DIAMETER LARGER THAN THE BAR, CLEANED PACKED WITH NON-SHRINK GROUT, AND THE BAR ROTATED (NOT DRIVEN) TO ITS SEAT. VERTICALLY DRILLED HOLES SHALL BE DRILLED ¼" IN DIAMETER LARGER THAN THE BAR, CLEANED, PACKED WITH EPOXY GROUT AND THE BAR SHALL BE DRIVEN TO ITS SEAT. ALL GROUTING MATERIAL SHALL BE APPROVED BY T.D.O.T. MATERIALS AND TESTS.

REQUIREMENTS AND RESTRICTIONS FOR PHASE CONSTRUCTION: THE LOCATION OF LONGITUDINAL CONSTRUCTION JOINTS SHALL NOT BE CHANGED TO ACCOMMODATE REMAIN-IN-PLACE DECK FORMS. ONE TWELVE (12) FOOT MINIMUM WIDE TRAFFIC LANE SHALL BE MAINTAINED AT ALL TIMES.

SPECIAL NOTE FOR UTILITIES: CARE SHALL BE TAKEN WHILE REMOVING AND REPLACING BRIDGE COMPONENTS SO AS NOT TO DISTURB OR DAMAGE ANY UTILITIES.

NOTE: THE CONTRACTOR SHALL CUT ONE (1) INCH DEEP INTO THE SLAB BEFORE REMOVING CONCRETE. ALL TRANSVERSE REINFORCING STEEL AT ABUTMENT WINGWALLS SHALL REMAIN IN PLACE AND BE SPLICED WITH NEW REINFORCING. THE CONTRACTOR IS RESPONSIBLE FOR AND SHALL TAKE ALL PRECAUTIONS TO ENSURE STABILITY OF THE STRUCTURE DURING REPAIRS.

NOTE: THE CONTRACTOR SHALL FIELD VERIFY ALL DIMENSIONS AND QUANTITIES BEFORE ORDERING ANY MATERIALS.

BRIDGE DECK FORMS: BRIDGE DECK FORMS FOR CONCRETE DECKS SHALL BE CONSTRUCTED USING EITHER REMOVABLE FORMS OR PERMANENT FORMS. PERMANENT FORMS MAY BE EITHER REMAIN-IN-PLACE STEEL OR PRECAST, PRESTRESSED CONCRETE PANELS. IN EITHER CASE, FORMS SHALL BE ATTACHED BY MEANS OTHER THAN WELDING TO MAIN STRUCTURAL MEMBERS OR REINFORCING STEEL. TEMPORARY ERECTION DIAPHRAGMS MUST BE USED AT THE ENDS OF PRECAST CONCRETE GIRDERS WHERE END DIAPHRAGMS, SUPPORT DIAPHRAGMS, OR ABUTMENT BACKWALLS ARE TO BE POURED CONCURRENTLY WITH THE DECK AND SHALL BE PROVIDED ELSEWHERE IN ACCORDANCE WITH THE SPECIFICATIONS TO PREVENT GIRDER ROTATION. SEE STANDARD DRAWINGS STD-4-1 THRU STD-4-4, STD-14-3, AND SECTION 604.05 OF THE STANDARD SPECIFICATIONS.

THE HANGER ASSEMBLY SELECTED BY THE CONTRACTOR MUST BE APPROVED BY THE ENGINEER OF STRUCTURES BEFORE THE HANGER ASSEMBLY CAN BE INSTALLED AND THE PRE-STRESSED BEAM SHOP DRAWINGS APPROVED. IT IS SOLELY THE CONTRACTOR'S RESPONSIBILITY TO ENSURE THE OVERHANG FORMWORK, BRACKETS AND CONNECTIONS ARE BOTH STRUCTURALLY AND FUNCTIONALLY ADEQUATE AND COMPLIANT WITH THE AASHTO BRIDGE CONSTRUCTION SPECIFICATION REQUIREMENTS.

SHOP DRAWINGS: SHALL BE SUBMITTED ACCORDING TO TDOT STANDARD SPECIFICATIONS SECTION 105. SHOP DRAWINGS SHALL BE SUBMITTED TO THE DIVISION OF STRUCTURES OFFICE, OFFICE OF BRIDGE INSPECTION AND REPAIR.

NOTE: FOR QUICK-SET PATCHING, MATERIAL SHALL BE POLYMER-MODIFIED CEMENTITIOUS STRUCTURAL PATCHING MATERIAL FROM THE TDOT QUALIFIED PRODUCTS LIST 13, SECTION B.6.

PROJECT NO.	YEAR	SHEET NO.
71006-4111-04	2014	2

REVISIONS

NO.	DATE	BY	BRIEF DESCRIPTION

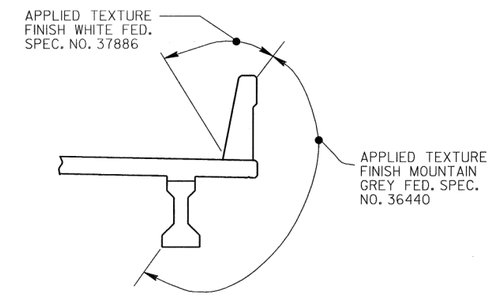

APPLIED TEXTURE FINISH SKETCHES

IN ADDITION TO THE SURFACES SHOWN IN THE APPLIED TEXTURE FINISH SKETCH, ALL EXPOSED SURFACES OF THE PIERS, WINGWALLS, ABUTMENT BEAMS AND EXTERIOR PORTIONS OF THE ENDWALL SHALL RECEIVE AN APPLIED TEXTURE FINISH.

COST OF CLEANING, FURNISHING AND APPLYING TEXTURE COATING INCLUDING LABOR AND NECESSARY MATERIALS SHALL BE INCLUDED IN ITEM NO. 604-04.01 AND 604-04.02, APPLIED TEXTURE FINISH (NEW STRUCTURES), S.Y. AND APPLIED TEXTURE FINISH (EXISTING STRUCTURES), S.Y.

THE CONTRACTOR SHALL USE CONTAINMENT SCREENS OR OTHER MEASURES AS NECESSARY TO PREVENT ANY TEXTURE COATING FROM ENTERING THE ENVIRONMENT OR ROADWAY BELOW. CONTAINMENT MEASURES SHALL BE APPROVED BY THE ENGINEER AND COST INCLUDED IN BID ITEMS.

THE EXISTING SURFACES THAT ARE TO RECEIVE A TEXTURE FINISH SHALL BE FREE OF ALL FLAKING TEXTURE COATING, RUST , DIRT, OIL, AND OTHER FOREIGN SUBSTANCES PRIOR TO THE APPLICATION OF THE TEXTURE FINISH. THE SURFACE SHALL BE CLEANED TO THE COMPLETE SATISFACTION OF THE ENGINEER. COST TO BE INCLUDED IN BID ITEMS. THE WASH WATER IS TO BE FILTERED AND PAINT CHIPS AND DEBRIS COLLECTED PRIOR TO RELEASE OF THE WATER.

A LIST OF APPROVED TEXTURE COATINGS MAY BE OBTAINED FROM THE TDOT DIVISION OF MATERIALS AND TESTS.

NO TEXTURE FINISH SHALL BE APPLIED PRIOR TO COMPLETION OF PAVING AND HAULING OPERATIONS AT BRIDGE SITE.

UNOFFICIAL SET
NOT FOR BIDDING

STATE OF TENNESSEE
DEPARTMENT OF TRANSPORTATION
BUREAU OF HIGHWAYS

BRIDGE GENERAL NOTES
& ESTIMATED QUANTITIES
STATE ROUTE 56
OVER
INTERSTATE 40
BRIDGE NO.71-SR056-00.54
PUTNAM COUNTY
2014

DESIGNED BY	WAP	DATE	01-14
DRAWN BY	MLP	DATE	01-14
SUPERVISED BY	WAP	DATE	01-14
CHECKED BY	WAP	DATE	01-14

BR-116-131

TENNESSEE D.O.T.
DESIGN DIVISION
FILE NO.

TYPE	YEAR	PROJECT NO.	SHEET NO.
CONST.	2014	71006-4111-04	2A

ESTIMATED ROADWAY QUANTITIES

	ITEM NO.	DESCRIPTION	UNIT	QUANTITY
	105-01	CONSTRUCTION STAKES, LINES AND GRADES	LS	1
2	209-05	SEDIMENT REMOVAL	CY	9
1	209-08.02	TEMPORARY SILT FENCE (WITH BACKING)	LF	232
	209-09.04	SEDIMENT FILTER BAG (15'X10')	EA.	1
	303-01	MINERAL AGGREGATE, TYPE A BASE, GRADING D	TON	21
2	303-10.01	MINERAL AGGREGATE (SIZE 57)	TON	14
	307-01.08	ASPHALT CONCRETE MIX (PG64-22) (BPMB-HM) GRADING B-M2	TON	27
	402-01	BITUMINOUS MATERIAL FOR PRIME COAT (PC)	TON	1
	402-02	AGGREGATE FOR COVER MATERIAL (PC)	TON	1
	403-01	BITUMINOUS MATERIAL FOR TACK COAT (TC)	TON	1
	411-01.10	ASPHALT CONCRETE MIX (PG64-22) GRADING D	TON	36
	415-01.02	COLD PLANING OF BITUMINOUS PAVEMENT	SY	572
	705-01.01	GUARDRAIL AT END OF BRIDGE	LF	98
	705-04.07	TAN ENERGY ABSORBING TERM (NCHRP 350, TL3)	EA.	4
	705-04.50	PORTABLE BARRIER RAIL DELINEATOR	EA.	15
3	705-08.51	PORTABLE IMPACT ATTENUATOR NCHRP350 TL-3	EA.	2
	706-01	GUARDRAIL REMOVED	LF	308
	712-01	TRAFFIC CONTROL	LS	1
	712-02.02	INTERCONNECTED PORTABLE BARRIER RAIL	LF	225
	712-02.47	BRIDGE MOUNTED INTERCONNECTED PORTABLE BARRIER RAIL	LF	203
	712-04.01	FLEXIBLE DRUMS (CHANNELIZING)	EA.	103
	712-05.01	WARNING LIGHTS (TYPE A)	EA.	8
	712-05.03	WARNING LIGHTS (TYPE C)	EA.	43
	712-06	SIGNS (CONSTRUCTION)	SF	1323
	712-08.03	ARROWBOARD (TYPE C)	EA.	2
	712-08.10	MOBILE MESSAGE SIGN UNIT W/ATTENUATOR	HR.	1000
	712-09.01	REMOVABLE PAVEMENT MARKING LINE	LF	12789
	712-09.04	REMOVABLE PAVEMENT MARKING LINE(STOP LINE)	LF	124
	716-13.06	SPRAY THERMO PAVEMENT MARKING (40 MIL) (4 IN LINE)	LM	.3
	717-01	MOBILIZATION	LS	1
	730-40	TEMPORARY TRAFFIC SIGNAL SYSTEM	EA.	1
2	740-10.03	GEOTEXTILE (TYPE III) (EROSION CONTROL)	S.Y.	40

*** MODIFIY S-GRC-1 BY OMITTING THE LAST 3'-1½" SPACE AND 6'-3" SPACE

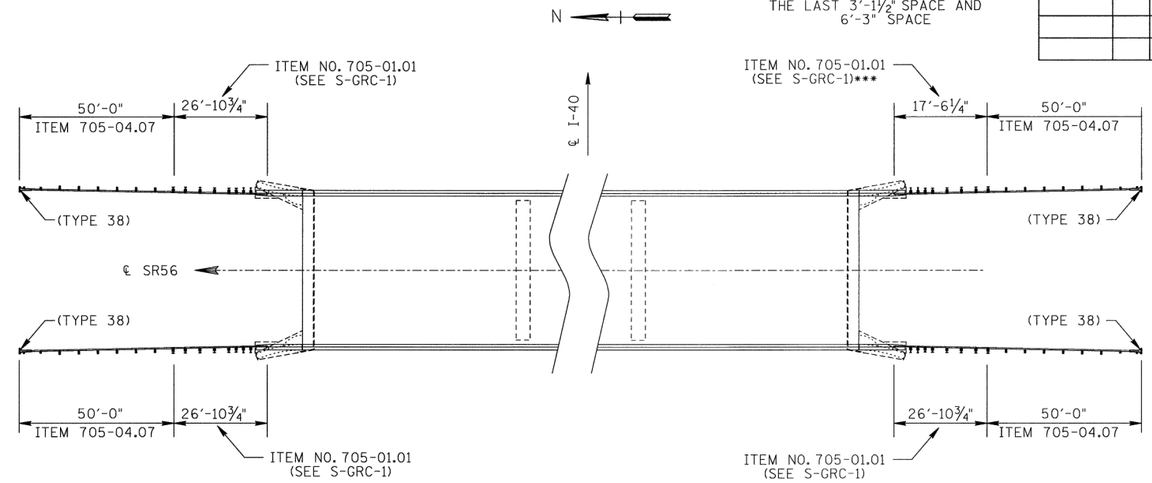

FOOTNOTES

1. INCLUDES THE COST OF ALL LABOR AND MATERAILS FOR FURNISHING AND INSTALLING THE TEMPORARY FILTER BARRIER WHERE LOCATED BY THE ENGINEER AND REMOVAL UPON PROJECT COMPLETION. SEE STD. DWG. EC-STR-3C. THE ENGINEER MAY INCREASE OR DECREASE OR ELIMINATE THE QUANTITY FOR THIS ITEM.

2. ITEM MAY BE INCREASED OR DECREASED AS DIRECTED BY THE ENGINEER.

3. THIS ITEM SHALL BE A PORTABLE ENERGY ABSORBING TERMINAL MEETING THE REQUIREMENTS OF NCHRP 350 FOR TEST LEVEL 3. EXAMPLES WOULD BE A QUAD-GUARD, A REACT 350 OR A TRACC. THE PAY ITEM WILL INCLUDE FURNISHING AND INSTALLING ALL COMPONENTS AS SHOWN ON THE MANUFACTURER'S DRAWING.

MISCELLANEOUS NOTES

1. NOTHING IN THE GENERAL NOTES OR SPECIAL PROVISIONS SHALL RELIEVE THE CONTRACTOR FROM HIS RESPONSIBILITIES TOWARD THE SAFETY AND CONVENIENCE OF THE GENERAL PUBLIC AND THE RESIDENTS ALONG THE PROPOSED CONSTRUCTION AREA.

2. THE CONTRACTOR SHALL BE RESPONSIBLE FOR ANY DAMAGE OR LOSS OF EXISTING SIGNS DURING CONSTRUCTION. EXISTING SIGNS SHALL BE REMOVED AND REPLACED AS NECESSARY.

GRADING NOTE

1. ANY AREA THAT IS DISTURBED OUTSIDE LIMITS OF CONSTRUCTION DURING THE LIFE OF THIS PROJECT SHALL BE REPAIRED BY THE CONTRACTOR AT HIS EXPENSE.

SPECIAL NOTES

1. TRAFFIC CONTROL PLAN - SEE SHEETS 2C THRU 2E AND STD. DWG. NOS. T-WZ-32, T-WZ-33, T-WZ-34, AND T-WZ-35.

2. THE CONTRACTOR SHALL NOT REMOVE, REWORK SHOULDERS OR FLATTEN SLOPES UNTIL THE APPROPRIATE WARNING DEVICES ARE INSTALLED.

GUARDRAIL NOTES

1. THE PROPOSED GUARDRAIL, INCLUDING ANY ANCHOR SYSTEM, SHALL BE INSTALLED QUICKLY TO MINIMIZE TRAFFIC EXPOSURE TO ANY HAZARD. NO PAYMENT WILL BE MADE FOR A SECTION OF PROPOSED GUARDRAIL, INCLUDING ANCHORS, UNTIL IT IS COMPLETE IN PLACE.

2. IF ANY APPROACH END OF A SECTION OF GUARDRAIL OR BRIDGE RAIL MUST TEMPORARILY BE LEFT INCOMPLETE BARRICADES OR DRUMS WITH TYPE A LIGHTS AND ROUNDED END ELEMENTS AS MINIMUM MEASURES TO PROTECT TRAFFIC FROM THE HAZARD OF AN EXPOSED END. ALL COST OF FURNISHING AND INSTALLING A TEMPORARY ROUNDED END ELEMENT SHALL BE INCLUDED IN THE COST OF THE PROPOSED GUARDRAIL.

UTILITY NOTES

1. THE LOCATIONS OF UTILITIES SHOWN WITHIN THESE PLANS ARE APPROXIMATE ONLY. EXACT LOCATIONS SHALL BE DETERMINED IN THE FIELD BY CONTACTING THE UTILITY COMPANIES INVOLVED. NOTIFICATION BY CALLING THE TENNESSEE ONE CALL SYSTEM, INC., AT 1-800-351-1111 AS REQUIRED BY TCA 65-31-106 WILL BE REQUIRED.

2. UNLESS OTHERWISE NOTED, ALL UTILITY ADJUSTMENTS WILL BE PERFORMED BY THE UTILITY OR IT'S REPRESENTATIVE. THE CONTRACTOR AND UTILITY OWNERS WILL BE REQUIRED TO COOPERATE WITH EACH OTHER IN ORDER TO EXPEDITE THE WORK REQUIRED BY THIS CONTRACT. ON CONTRACTS WHERE CONSTRUCTION STAKES, LINES, AND GRADES ARE CONTRACT ITEMS, THE CONTRACTOR WILL BE REQUIRED TO PROVIDE RIGHT-OF-WAY OR SLOPE STAKES, DITCH OR STREAM BED GRADES, OR OTHER ESSENTIAL SURVEY STAKING TO PREVENT CONFLICTS WITH THE HIGHWAY CONSTRUCTION. FREQUENTLY, THIS WILL BE REQUIRED AS THE FIRST ITEM OF WORK AND AT ANY LOCATION ON THE PROJECT DIRECTED BY THE ENGINEER.

3. THE CONTRACTOR WILL PROVIDE ALL NECESSARY PROTECTIVE MEASURES TO SAFEGUARD EXISITING UTILITIES FROM DAMAGE DURING CONSTRUCTION OF THIS PROJECT. IN THE EVENT THAT SPECIAL EQUIPMENT IS REQUIRED TO WORK OVER AND AROUND THE UTILITIES, THE CONTRACTOR WILL BE REQUIRED TO FURNISH SUCH EQUIPMENT. THE COST OF PROTECTING UTILITIES FROM DAMAGE AND FURNISHING SPECIAL EQUIPMENT WILL BE INCLUDED IN THE BID PRICE FOR OTHER ITEMS OF CONSTRUCTION.

4. PRIOR TO SUBMITTING HIS BID, THE CONTRACTOR WILL BE SOLELY RESPONSIBLE FOR CONTACTING OWNERS OF ALL AFFECTED UTILITIES IN ORDER TO DETERMINE THE EXTENT TO WHICH RELOCATIONS AND/OR ADJUSTMENTS WILL HAVE UPON THE SCHEDULE OF WORK FOR THE PROJECT. WHILE SOME WORK MAY BE REQUIRED "AROUND" UTILITY FACILITIES THAT WILL REMAIN IN PLACE. OTHER UTILITY FACILITIES MAY NEED TO BE ADJUSTED CONCURRENTLY WITH THE CONTRACTOR'S OPERATIONS. ADVANCE CLEAR CUTTING MAY BE REQUIRED BY THE ENGINEER AT ANY LOCATION WHERE CLEARING IS CALLED FOR IN THE SPECIFICATIONS AND CLEAR CUTTING IS NECESSARY FOR A UTILITY RELOCATION. ANY ADDITIONAL COST WILL BE INCLUDED IN THE UNIT PRICE BID FOR THE CLEARING ITEM SPECIFIED IN THE PLANS.

5. THE CONTRACTOR SHALL NOTIFY EACH INDIVIDUAL UTILITY OWNER OF HIS PLAN OF OPERATION IN THE AREA OF THE UTILITIIES. PRIOR TO COMMENCING WORK, THE CONTRACTOR SHALL CONTACT THE UTILITY OWNERS AND REQUEST THEM TO PROPERLY LOCATE THEIR RESPECTIVE UTILITY ON THE GROUND. THIS NOTIFICATION SHALL BE GIVEN AT LEAST THREE (3) BUSINESS DAYS PRIOR TO COMMENCEMENT OF OPERATIONS AROUND THE UTILITY IN ACCORDANCE WITH TCA 65-31-106.

CONSTRUCTION WORK ZONE & TRAFFIC CONTROL NOTES

1. ADVANCED WARNING SIGNS SHALL NOT BE DISPLAYED MORE THAN FORTY-EIGHT (48) HOURS BEFORE PHYSICAL CONSTRUCTION BEGINS. SIGNS MAY BE ERECTED UP TO ONE WEEK BEFORE NEEDED, IF THE SIGN FACE IS FULLY COVERED.

2. IF THE CONTRACTOR MOVES OFF THE PROJECT, HE SHALL COVER OR REMOVE ALL UNNEEDED SIGNS AS DIRECTED BY THE ENGINEER. COSTS OF REMOVAL, COVERING, AND REINSTALLING SIGNS SHALL NOT BE MEASURED AND PAID FOR SEPARATELY, BUT ALL COSTS SHALL BE INCLUDED IN THE ORIGINAL UNIT PRICE BID FOR ITEM NO. 712-06, SIGNS (CONSTRUCTION) PER SQUARE FOOT.

3. A LONG TERM BUT SPORADIC USE WARNING SIGN, SUCH AS FLAGGER SIGN, MAY REMAIN IN PLACE WHEN NOT REQUIRED PROVIDED THE SIGN FACE IS FULLY COVERED.

4. TRAFFIC CONTROL DEVICES SHALL NOT BE DISPLAYED OR ERECTED UNLESS RELATED CONDITIONS ARE PRESENT NECESSITATING WARNING.

5. USE OF BARRICADES, PORTABLE BARRIER RAILS, VERTICAL PANELS, AND DRUMS SHALL BE LIMITED TO THE IMMEDIATE AREAS OF CONSTRUCTION WHERE A HAZARD IS PRESENT. THESE DEVICES SHAL NOT BE STORED ALONG THE ROADWAY WITHIN THIRTY (30) FEET OF THE EDGE OF THE TRAVELED WAY BEFORE OR AFTER USE UNLESS PROTECTED BY GUARDRAIL, BRIDGE RAIL, AND/OR BARRIERS INSTALLED FOR OTHER PURPOSES FOR ROADWAYS WITH CURRENT ADT'S LESS THAN 1500 AND DESIGN SPEED OF LESS THAN 60 MPH. THIS DISTANCE SHALL INCREASE TO FORTY-FIVE (45) FEET FOR ROADWAYS WITH CURRENT ADT'S OF 1500 OR GREATER AND DESIGN SPEED OF 60 MPH OR GREATER OR ON THE OUTSIDE OF A HORIZONTAL CURVE. THESE DEVICES SHALL BE REMOVED FROM THE CONSTRUCTION WORK ZONE WHEN THE ENGINEER DETERMINES THEY ARE NO LONGER NEEDED. WHERE THERE IS INSUFFICIENT RIGHT-OF-WAY TO PROVIDE FOR THIS REQUIRED SETBACK, THE CONTRACTOR SHALL DETERMINE THE ALTERNATE LOCATIONS AND REQUEST THE ENGINEER'S APPROVAL TO USE THEM.

6. THE CONTRACTOR SHALL NOT BE PERMITTED TO PARK ANY VEHICLES OR CONSTRUCTION EQUIPMENT DURING PERIODS OF INACTIVITY, WITHIN THIRTY (30) FEET OF THE EDGE OF PAVEMENT WHEN THE LANE IS OPEN TO TRAFFIC UNLESS PROTECTED BY GUARDRAIL, BRIDGE RAIL, AND/OR BARRIERS INSTALLED FOR OTHER PURPOSES FOR ROADWAYS WITH CURRENT ADT'S LESS THAN 1500 AND DESIGN SPEED OF LESS THAN 60 MPH. THIS DISTANCE SHALL BE INCREASED TO FORT-FIVE (45) FEET FOR ROADWAYS WITH CURRENT ADT'S OF 1500 OR GREATER AND DESIGN SPEED OF 60 MPH OR GREATER OR ON THE OUTSIDE OF A HORIZONTAL CURVE. PRIVATELY OWNED VEHICLES SHALL NOT BE ALLOWED TO PARK WITHIN THIRTY (30) FEET OF A OPEN TRAFFIC LANE AT ANY TIME UNLESS PROTECTED AS DESCRIBED ABOVE FOR ROADWAYS WITH CURRENT ADT'S LESS THAN 1500 AND DESIGN SPEED OF LESS THAN 60 MPH. THIS DISTANCE SHALL BE INCREASED TO FORTY-FIVE (45) FEET FOR ROADWAYS WITH CURRENT ADT'S OF 1500 OR GREATER AND DESIGN SPEED OF 60 MPH OR GREATER OR ON THE OUTSIDE OF A HORIZONTAL CURVE. WHERE THERE IS INSUFFICIENT RIGHT-OF-WAY TO PROVIDE FOR THIS REQUIRED SETBACK, THE CONTRACTOR SHAL DETERMINE THE ALTERNATE LOCATIONS AND REQUEST THE ENGINEER'S APPROVAL TO USE THEM.

7. ALL DETOUR AND CONSTRUCTION SIGNING SHALL BE IN STRICT ACCORDANCE WITH THE MANUAL ON UNIFORM TRAFFIC CONTROL DEVICES.

UNOFFICIAL SET

NOT FOR BIDDING

STATE OF TENNESSEE
DEPARTMENT OF TRANSPORTATION

ESTIMATED ROADWAY QUANTITIES AND GENERAL NOTES

BR. NO. 71-SR056-00.54

TENNESSEE D.O.T.
DESIGN DIVISION
FILE NO.

TYPE	YEAR	PROJECT NO.	SHEET NO.
CONST.	2014	71006-4111-04	2B

PAVEMENT EDGE DROP-OFF TRAFFIC CONTROL NOTES

A. DIFFERENCES IN ELEVATION BETWEEN ADJACENT TRAFFIC LANES OR TRAFFIC LANE AND SHOULDER WHERE THE TRAFFIC LANE IS BEING USED BY TRAFFIC, CAUSED BY BASE, PAVING OR RESURFACING:

1. DIFFERENCES IN ELEVATION BETWEEN ADJACENT ROADWAY ELEMENTS GREATER THAN 0.75 INCH AND NOT EXCEEDING 2 INCHES:

   A. WARNING SIGNS, UNEVEN PAVEMENT (W8-11) AND/OR SHOULDER DROP-OFF (W8-9A), SHALL BE PLACED IN ADVANCE OF AND THROUGHOUT THE EXPOSED AREA. MAXIMUM SPACING BETWEEN SIGNS SHALL BE 2,000 FEET WITH A MINIMUM OF 2 SIGNS PER EXPOSED AREA. WHERE UNEVEN PAVEMENT IS ENCOUNTERED, SIGNS SHALL BE PLACED ON EACH SIDE OF THE ROADWAY.

   B. DIFFERENCES IN ELEVATION BETWEEN ADJACENT TRAFFIC LANES BEING UTILIZED BY TRAFFIC CAUSED BY ADDED PAVEMENT SHALL BE ELIMINATED WITHIN THREE WORKDAYS.

   C. DIFFERENCES IN ELEVATION BETWEEN ADJACENT TRAFFIC LANES BEING UTILIZED BY TRAFFIC CAUSED BY COLD PLANING SHALL BE ELIMINATED WITHIN THREE WORKDAYS.

   D. WHEN THE DIFFERENCE IN ELEVATION IS BETWEEN THE TRAFFIC LANE BEING UTILIZED BY TRAFFIC AND SHOULDER THE DIFFERENCE IN ELEVATION SHALL BE ELIMINATED WITHIN SEVEN WORKDAYS AFTER THE CONDITION IS CREATED.

2. DIFFERENCES IN ELEVATION BETWEEN ADJACENT ROADWAY ELEMENTS GREATER THAN 2 INCHES AND NOT EXCEEDING 6 INCHES. TRAFFIC IS NOT TO BE ALLOWED TO TRAVERSE THIS DIFFERENCE IN ELEVATION.

   A. SEPARATION SHALL BE ACCOMPLISHED BY DRUMS, BARRICADES OR OTHER APPROVED DEVICES IN ACCORDANCE WITH THE FOLLOWING:

      (1) WHERE POSTED SPEEDS ARE 50 MPH OR GREATER, SPACING OF THE PROTECTIVE DEVICES SHALL NOT EXCEED 100 FEET.

      (2) WHERE POSTED SPEEDS ARE LESS THAN 50 MPH, THE MAXIMUM SPACING OF THE PROTECTIVE DEVICES IN FEET SHALL NOT EXCEED TWICE THE POSTED SPEED IN MILES PER HOUR OR 50 FEET, WHICHEVER SPACING IS GREATER.

   B. IF THE DIFFERENCE IN ELEVATION IS ELIMINATED OR DECREASED TO 2 INCHES OR LESS BY THE END OF EACH WORKDAY, CONES MAY BE USED DURING DAYLIGHT HOURS IN LIEU OF DRUMS, BARRICADES OR OTHER APPROVED PROTECTIVE DEVICES MENTIONED IN PARAGRAPH A, PROVIDED WARNING SIGNS ARE ERECTED. WARNING SIGNS (UNEVEN PAVEMENT AND/OR LOW SHOULDER) SHALL BE PLACED IN ADVANCE OF AND THROUGHOUT THE EXPOSED AREA. MAXIMUM SPACING BETWEEN SIGNS SHALL BE 2,000 FEET WITH A MINIMUM OF 2 SIGNS PER EXPOSED AREA. WHERE UNEVEN PAVEMENT IS ENCOUNTERED, SIGNS SHALL BE PLACED ON EACH SIDE OF THE ROADWAY.

   C. WHEN THE DIFFERENCE IN ELEVATION IS BETWEEN THE THROUGH TRAFFIC LANE AND THE SHOULDER AND THE ELEVATION DIFFERENCE IS LESS THAN 3.5 INCHES, THE CONTRACTOR MAY USE WARNING SIGNS AND/OR PROTECTIVE DEVICES AS APPLICABLE AND APPROVED BY THE ENGINEER. SEE PARAGRAPH A REGARDING USE OF DRUMS, BARRICADES OR OTHER APPROVED PROTECTIVE DEVICES. WARNING SIGNS (UNEVEN PAVEMENT AND/OR LOW SHOULDER) WILL BE PLACED IN ADVANCE OF AND THROUGHOUT THE EXPOSED AREA. MAXIMUM SPACING BETWEEN SIGNS SHALL BE 2,000 FEET WITH A MINIMUM OF 2 SIGNS PER EXPOSED AREA. WHERE UNEVEN PAVEMENT IS ENCOUNTERED, SIGNS SHALL BE PLACED ON EACH SIDE OF THE ROADWAY. IN THESE SITUATIONS, THE CONTRACTOR SHALL LIMIT HIS OPERATIONS TO ONE WORK ZONE NOT EXCEEDING 2 MILES IN LENGTH UNLESS OTHERWISE NOTED ON THE PLANS OR APPROVED BY THE ENGINEER. ONCE THE CONTRACTOR BEGINS WORK IN A WORK ZONE, A CONTINUOUS OPERATION SHALL BE MAINTAINED UNTIL THE DIFFERENCE IN ELEVATION IS ELIMINATED. SIMULTANEOUS WORK ON SEPARATE ROADWAYS OF DIVIDED HIGHWAYS WILL BE CONSIDERED INDEPENDENTLY IN REGARD TO RESTRICTION OF WORK ZONE ACTIVITY.

B. THE DIFFERENCE IN ELEVATION IS FARTHER THAN 8 FEET FROM THE NEAREST TRAFFIC LANE BUT NOT MORE THAN 30 FEET FROM THE NEAREST TRAFFIC LANE: SEPARATION SHALL BE ACCOMPLISHED BY DRUMS, BARRICADES OR OTHER APPROVED DEVICES IN ACCORDANCE WITH THE FOLLOWING:

1. WHERE POSTED SPEEDS ARE 50 MPH OR GREATER, SPACING OF THE PROTECTIVE DEVICES SHALL NOT EXCEED 100 FEET.

2. WHERE POSTED SPEEDS ARE LESS THAN 50 MPH, THE MAXIMUM SPACING OF THE PROTECTIVE DEVICES IN FEET SHALL NOT EXCEED TWICE THE POSTED SPEED IN MILES PER HOUR OR 50 FEET, WHICHEVER SPACING IS GREATER. THE CONTRACTOR SHALL SCHEDULE THE WORK SO AS TO MINIMIZE THE TIME TRAFFIC IS EXPOSED TO AN ELEVATION DIFFERENCE. ONCE THE CONTRACTOR BEGINS AN ACTIVITY THAT CREATES AN ELEVATION DIFFERENCE, THE ACTIVITY SHALL BE PURSUED AS A CONTINUOUS OPERATION UNTIL THE ELEVATION DIFFERENCE IS ELIMINATED.

PAVEMENT MARKING NOTES

1. TEMPORARY PAVEMENT LINE MARKINGS ON INTERMEDIATE LAYERS OF PAVEMENT SHALL BE REFLECTIVE TAPE OR REFLECTORIZED PAINT INSTALLED TO PERMANENT STANDARDS AT THE END OF EACH DAY'S WORK. SHORT, UNMARKED SECTIONS WILL NOT BE ALLOWED. THESE MARKINGS WILL BE MEASURED AND PAID FOR UNDER ITEM NO. 712-09.01 REMOVABLE PAVEMENT MARKING LINE PER LINEAR FOOT.

2. PERMANENT PAVEMENT LINE MARKING SHALL BE 4" SPRAY THERMOPLASTIC (40 MIL) INSTALLED TO PERMANENT STANDARDS AT THE END OF EACH DAY'S WORK. SHORT UNMARKED SECTIONS SHALL NOT BE ALLOWED. PAVEMENT MARKINGS WILL BE MEASURED AND PAID FOR UNDER ITEM NO. 716-13.06 , SPRAY THERMO PVMT MRKNG (40 MIL) (4 IN LINE), L.M. THE CONTRACTOR SHALL HAVE THE OPTION OF USING REFLECTORIZED PAINT INSTALLED TO PERMANENT STANDARDS AT THE END OF EACH DAY'S WORK AND THEN INSTALLING THE PERMANENT MARKINGS AFTER THE PAVING OPERATION IS COMPLETED. THE TEMPORARY MARKINGS FOR THE FINAL SURFACE WILL NOT BE MEASURED AND PAID FOR DIRECTLY, BUT THE COSTS ARE TO BE INCLUDED IN THE PRICE BID FOR THE PERMANENT MARKINGS.

3. BEFORE OPENING THE LANE SHIFT TO TRAFFIC, THE TRANSITIONAL MARKINGS ON THE EXISTING ROADWAY MUST BE IN PLACE. THESE MARKINGS WILL BE MEASURED AND PAID FOR UNDER ITEM NO. 712-09.01 REMOVABLE PAVEMENT MARKING LINE, L.F. ALL EXISTING MARKINGS SHALL BE OBLITERATED AND ALL EXISTING RAISED PAVEMENT MARKERS SHALL BE REMOVED TO ELIMINATE CONFLICTING MARKINGS. REMOVAL OF THE EXISTING MARKINGS AND RAISED PAVEMENT MARKERS WILL NOT BE MEASURED AND PAID FOR DIRECTLY, BUT THE COST WILL BE INCLUDED IN ITEM NO. 712-01 TRAFFIC CONTROL, LUMP SUM.

PAVING RESURFACING NOTES

1. THE CONTRACTOR SHALL BE REQUIRED TO COLD PLANE AND PAVE IN THE DIRECTION OF TRAFFIC.

2. IN ALL CASES FOR THE LENGTH OF THE PAVEMENT TRANSITION THE THICKNESS AND WIDTH OF THE RESURFACING AND ANY ADDTIONAL PAVEMENT MATERIALS SHALL BE AS DIRECTED BY THE TDOT ENGINEER.

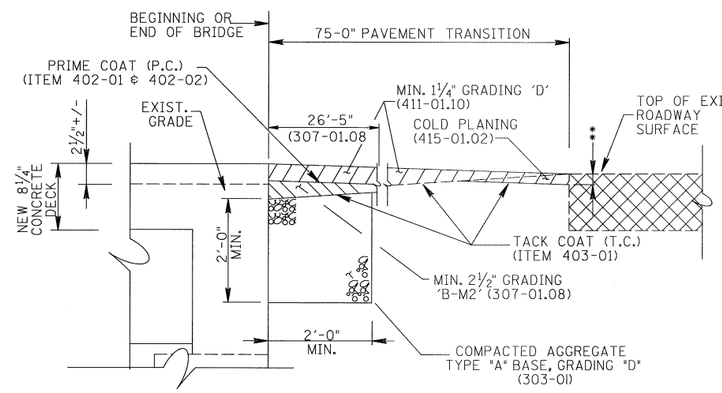

PAVEMENT TRANSITION DETAIL

NOTES:

PAVEMENT AT EACH END OF BRIDGE TO BE REPAIRED AFTER COMPLETION OF BRIDGE REPAIRS TO PROVIDE A SMOOTH RIDING SURFACE FROM EXISTING ASPHALT TO NEW CONCRETE DECK.

** DENOTES: 1" VERTICAL SAWCUT TO ENSURE SMOOTH EDGE AT END OF ASPHALT TRANSITION. SAWCUT TO BE INCLUDED IN BID ITEMS.

SEE SECTION 617 AND 906.04 OF THE TENNESSEE STANDARD SPECIFICATIONS FOR ROAD AND BRIDGE CONSTRUCTION.

REMOVAL OF 50' EXISTING ASPHALT TRANSITION FOR FULL WIDTH OF APPROACHES (TWO 12' LANES) TO BE PAID FOR UNDER ITEM NO. 415-01.02.

ASPHALT TO BE SLOPED OR FEATHERED AS NECESSARY TO OBTAIN DESIRED SURFACE SLOPE.

UNOFFICIAL SET

NOT FOR BIDDING

STATE OF TENNESSEE
DEPARTMENT OF TRANSPORTATION

ROADWAY NOTES AND DETAILS

BR. NO. 71-SR056-00.54

TENNESSEE D.O.T.
DESIGN DIVISION
FILE NO.

TYPE	YEAR	PROJECT NO.	SHEET NO.
CONST.	2014	71006-4111-04	2C

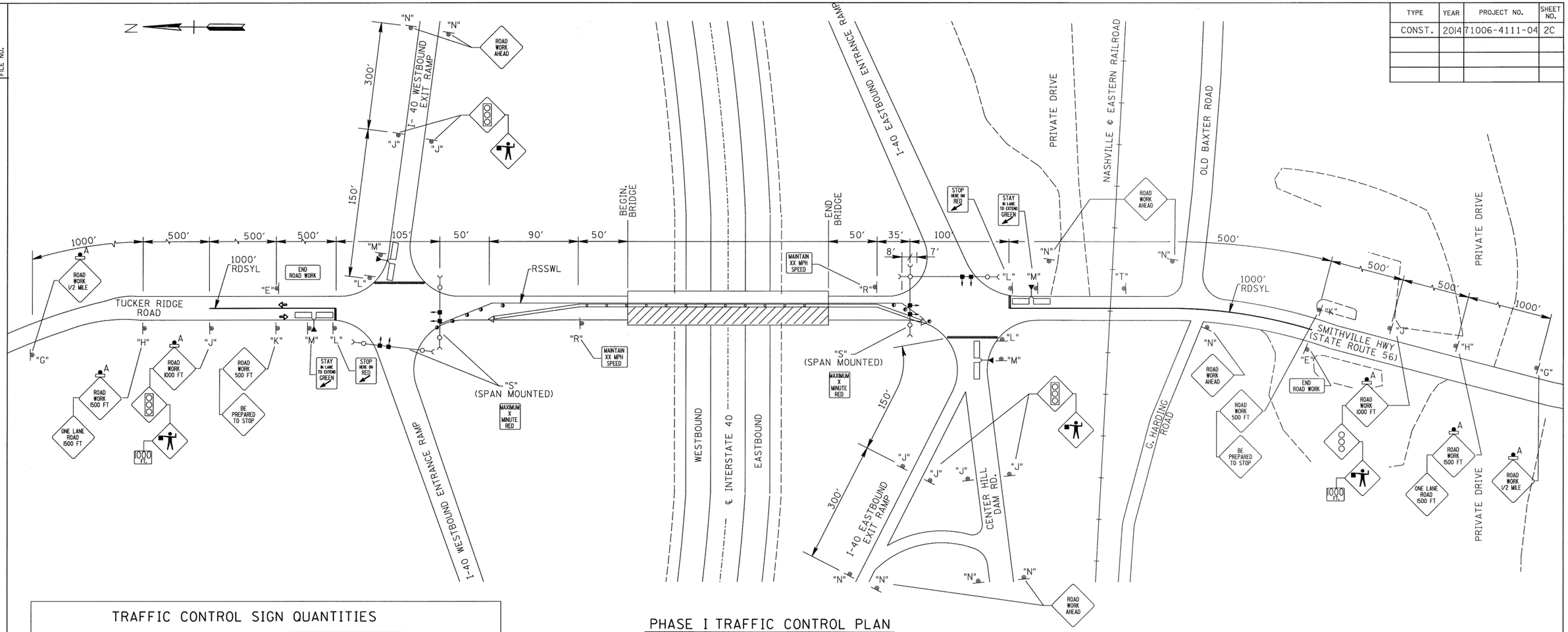

PHASE I TRAFFIC CONTROL PLAN

PHASE I CONSTRUCTION SHOWN

TRAFFIC CONTROL SIGN QUANTITIES

	TYPE	DESCRIPTION	SIZE	EACH	S.F.
	W20-1A	ROAD WORK 1 MILE (LOCATION "A")	48"X48"	4	64
	W20-1B	RIGHT LANE CLOSED ½ MILE (LOCATION "B")	48"X48"	4	64
	W20-1C	RIGHT LANE CLOSED 1500 FT. (LOCATION "C")	48"X48"	4	64
	W20-1D	LEFT LANE CLOSED ½ MILE (LOCATION "B")	48"X48"	4	64
	W20-1E	LEFT LANE CLOSED 1500 FT. (LOCATION "C")	48"X48"	4	64
	W4-2R	LANE SHIFT (SYMBOL)(LOCATION "D")	48"X48"	4	64
	W4-2L	LANE SHIFT (SYMBOL)(LOCATION "D")	48"X48"	4	64
	G20-2A	END ROAD WORK (LOCATION "E")	36"X18"	4	18
	W13-2A	SUPPLEMENTAL PLATE (60 MPH) (LOCATION "C")	24"X18"	4	12
1	W20-1G	ROAD WORK ½ MILE (LOCATION "G")	48"X48"	6	96
1	W20-1H	ROAD WORK 1500 FT. (LOCATION "H")	48"X48"	2	32
1	W20-1J	ROAD WORK 1000 FT. (LOCATION "J")	48"X48"	6	96
	W20-1K	ROAD WORK 500 FT. (LOCATION "K")	48"X48"	2	32
	W20-4B	ONE LANE ROAD 1500 FT. (LOCATION "H")	48"X48"	2	32
	W3-3	SIGNAL HEAD (SYMBOL) (LOCATION "J")	36"X36"	8	72
	W20-7A	FLAGGER AHEAD (SYMBOL) (LOCATION "J")	36"X36"	8	72
	W20-7B	BE PREPARED TO STOP (LOCATION "K")	48"X48"	2	32
	W13-2B	SUPPLEMENTAL PLATE (1000FT) (LOCATION "J")	24"X18"	8	6
	R10-6	STOP HERE ON RED (LOCATION "L")	24"X36"	4	24
	R10-6(MOD)	STAY IN LANE TO EXTEND GREEN (LOCATION "M")	30"X42"	4	35
	W20-1	ROAD WORK AHEAD (LOCATION "N")	48"X48"	9	144
	E5-1	EXIT (LOCATION "P")	48"X36"	2	24
	E5-2	EXIT OPEN (LOCATION "Q")	48"X36"	2	24
	SPECIAL	MAINTAIN 20 M.P.H. SPEED (LOCATION "R")	42"X36"	2	21
1	SPECIAL	MAXIMUM 3 MINUTE RED (LOCATION "S")	42"X48"	4	56
1	SPECIAL	HORIZ. CLEARANCE 10'-3" (LOCATION "L")	36"X36"	4	36
	SPECIAL	DO NOT STOP ON RAILROAD TRACK (LOCATION "T")	42"X36"	1	11
	TOTAL	712-06 SIGNS (CONSTRUCTION)			1323

1 DENOTES SIGN WITH TYPE "A" WARNING LIGHTS"

TRAFFIC CONTROL NOTES

ADVANCE WARNING SIGNS TO BE PLACED PRIOR TO CONSTRUCTION AND REMAIN IN PLACE UNTIL THE COMPLETION OF THIS PROJECT.

THE TRAFFIC CONTROL PLAN DOES NOT RELIEVE THE CONTRACTOR OF THE RESPONSIBILITY OF INSTALLING TRAFFIC CONTROL DEVICES IN ACCORDANCE WITH THE CURRENT EDITION OF THE "MANUAL ON UNIFORM TRAFFIC CONTROL DEVICES".

TRAFFIC SIGNALS SHALL BE PLACED IN FULL VIEW OF ALL PRIVATE DRIVES.

TYPE "A" WARNING LIGHTS SHALL BE PLACED ON DESIGNATED ADVANCED WARNING SIGNS.

IF ADDITIONAL SIGNS ARE DEEMED NECESSARY BY THE ENGINEER, THEY SHALL BE FURNISHED AND INSTALLED AT THE UNIT PRICE BID, ITEM NO. 712-06, SIGNS (CONSTRUCTION), S.F.

FOR ADDITIONAL DETAILS AND NOTES SEE STD. DWGS. T-WZ-32, T-WZ-33, T-WZ-34, AND T-WZ-35.

TRAFFIC CONTROL LEGEND

- FLEXIBLE DRUMS (CHANNELIZING) SPACED AS SHOWN
- PORTABLE BARRIER RAIL WITH RAIL DELINEATORS @ 20 +/-
- TRAFFIC SIGNAL SYSTEM
- SIGN
- RDSYL REMOVABLE DOUBLE SOLID YELLOW LINE
- RSSWL REMOVABLE SINGLE SOLID WHITE LINE
- REMOVABLE STOP LINE
- DETECTOR LOOP
- ATTENUATOR
- DENOTES : WORK ZONE
- DENOTES : DIRECTION OF TRAVEL
- DENOTES : TYPE "A" WARNING LIGHTS REQUIRED

UNOFFICIAL SET

NOT FOR BIDDING

STATE OF TENNESSEE
DEPARTMENT OF TRANSPORTATION

TRAFFIC CONTROL PLAN - PHASE I

BR. NO. 71-SR056-00.54

TENNESSEE D.O.T.	
DESIGN DIVISION	
FILE NO.	

TYPE	YEAR	PROJECT NO.	SHEET NO.
CONST.	2014	71006-4111-04	2D

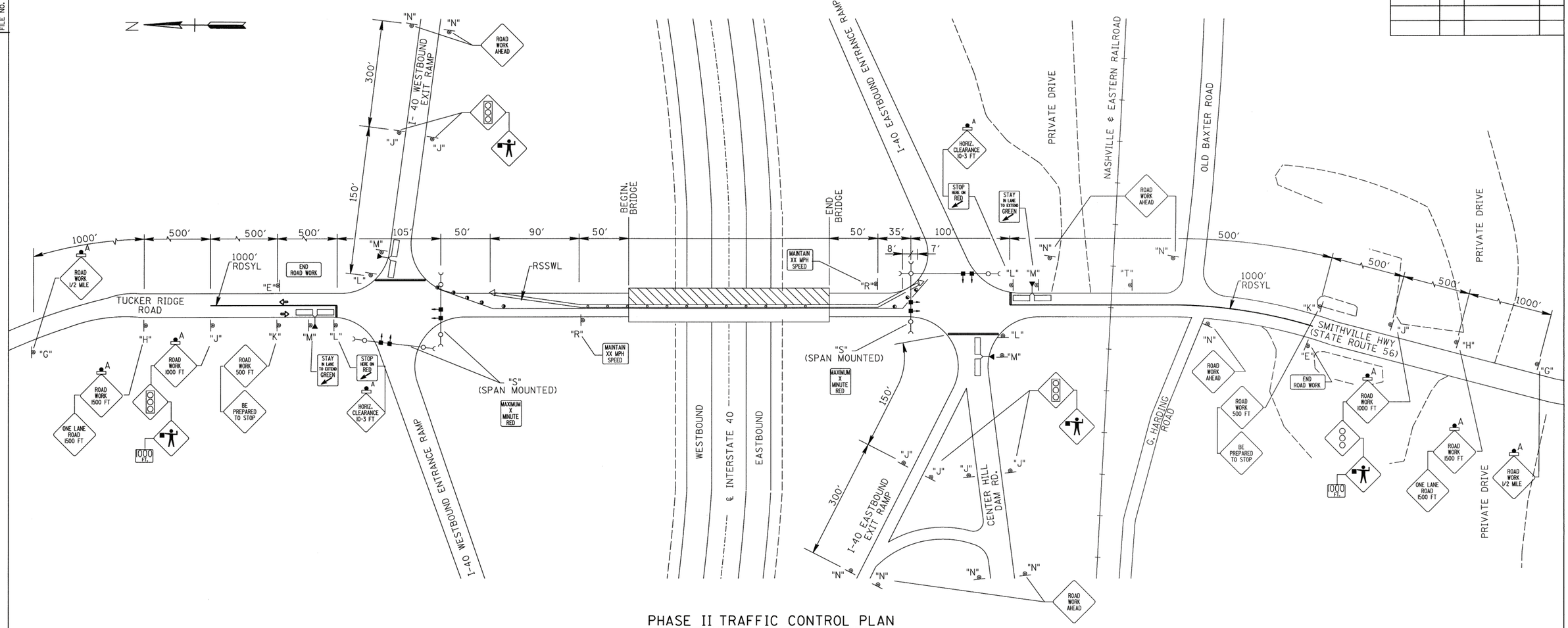

PHASE II TRAFFIC CONTROL PLAN

PHASE II CONSTRUCTION SHOWN

TRAFFIC CONTROL LEGEND

◑	FLEXIBLE DRUMS (CHANNELIZING) SPACED AS SHOWN
═══	PORTABLE BARRIER RAIL WITH RAIL DELINEATORS @ 20 +/-
	TRAFFIC SIGNAL SYSTEM
	SIGN
RDSYL	REMOVABLE DOUBLE SOLID YELLOW LINE
RSSWL	REMOVABLE SINGLE SOLID WHITE LINE
▬	REMOVABLE STOP LINE
	DETECTOR LOOP
△	ATTENUATOR
	DENOTES : WORK ZONE
	DENOTES : DIRECTION OF TRAVEL
A	DENOTES : TYPE "A" WARNING LIGHTS REQUIRED

JOHN C. PRICE
REGISTERED ENGINEER
4/02/14

UNOFFICIAL SET

NOT FOR BIDDING

STATE OF TENNESSEE
DEPARTMENT OF TRANSPORTATION

TRAFFIC CONTROL PLAN - PHASE II

BR. NO. 71-SR056-00.54

TENNESSEE D.O.T.	DESIGN DIVISION	FILE NO.

TYPE	YEAR	PROJECT NO.	SHEET NO.
CONST.	2014	71006-4111-04	2E

NOTES

TYPE "C" WARNING LIGHTS SHALL BE USED ON ALL CHANNELIZING DRUMS IN TAPERS ON THE INTERSTATE.

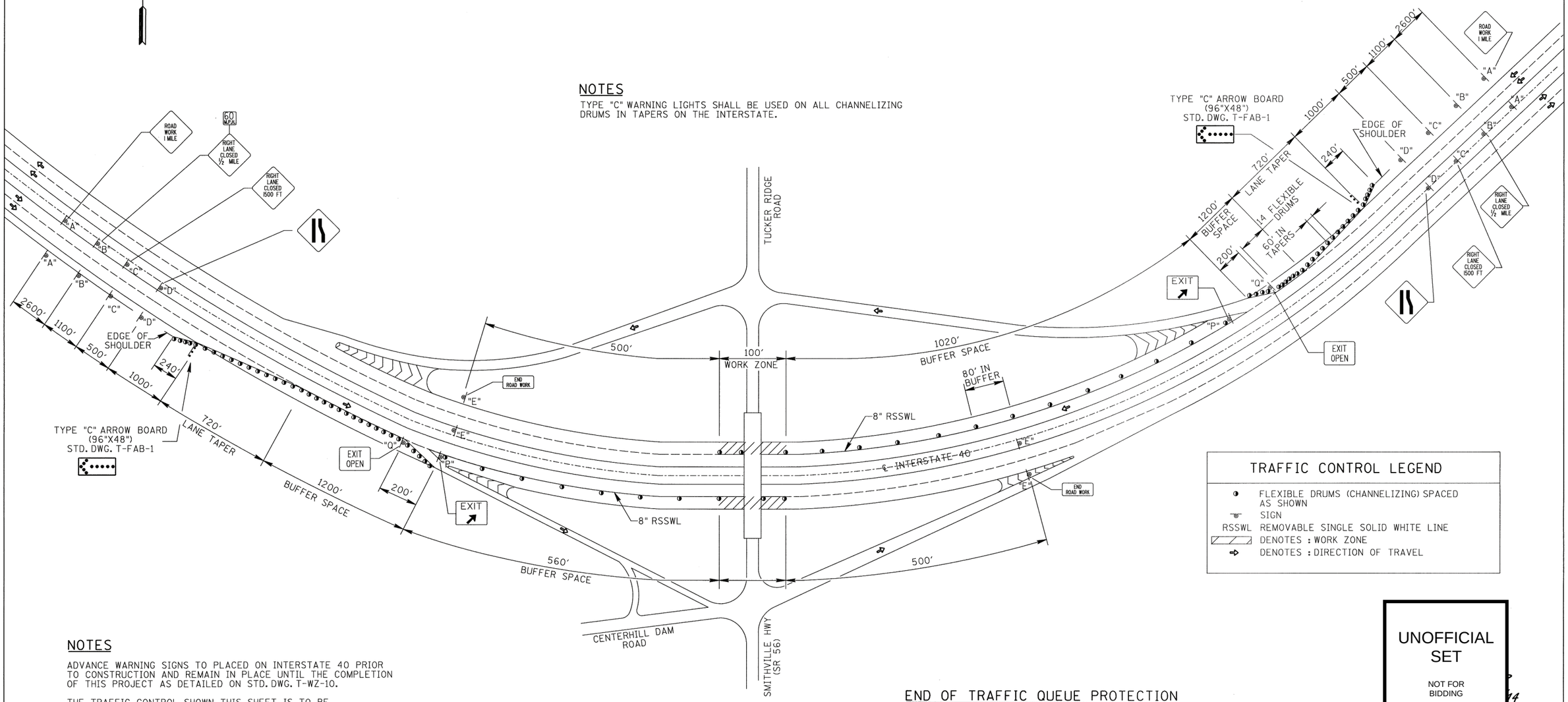

TRAFFIC CONTROL LEGEND

◐	FLEXIBLE DRUMS (CHANNELIZING) SPACED AS SHOWN
	SIGN
RSSWL	REMOVABLE SINGLE SOLID WHITE LINE
	DENOTES : WORK ZONE
	DENOTES : DIRECTION OF TRAVEL

UNOFFICIAL SET

NOT FOR BIDDING

NOTES

ADVANCE WARNING SIGNS TO PLACED ON INTERSTATE 40 PRIOR TO CONSTRUCTION AND REMAIN IN PLACE UNTIL THE COMPLETION OF THIS PROJECT AS DETAILED ON STD. DWG. T-WZ-10.

THE TRAFFIC CONTROL SHOWN THIS SHEET IS TO BE USED DURING INSTALLATION OF SHIELDING, DURING BENT REPAIRS, AND AT ANY OTHER TIME AS DIRECTED BY THE ENGINEER. SEE STD. DWGS. T-WZ-11 FOR OTHER DETAILS.

THE CONTRACTOR SHALL BE REQUIRED TO PROVIDE 100% SHIELDING TO PROTECT MOTORISTS FROM DEBRIS AND/OR OTHER MATERIALS THAT MAY BE A HAZARD OR PRODUCE HAZARDOUS CONDITIONS TO THE PUBLIC. CONTRACTOR SHALL SUBMIT SHIELDING PLAN SEALED BY A PROFESSIONAL ENGINEER LICENSED IN THE STATE OF TENNESSEE FOR APPROVAL.

ALL INTERSTATE LANE CLOSURES SHALL BE LIMITED TO SUNDAY THROUGH THURSDAY FROM 8 PM TO 6 AM. THE CONTRACTOR SHALL NOT BE ALLOWED TO INTERRUP TRAFFIC FLOW AND SHALL MAINTAIN ALL LANES OF TRAFFIC IN EACH DIRECTION DURING THE FOLLOWING DAYS:

A: OFFICIAL STATE HOLIDAYS
B. FRIDAY AFTERNOON UNTIL TUESDAY MORNING WHEN A STATE HOLIDAY OCCURS OR IS OBSERVED ON A MONDAY.
C. THURSDAY AFTERNOON UNTIL MONDAY MORNING WHEN A STATE HOLIDAY OCCURS OR IS OBSERVED ON FRIDAY.
D. LANE CLOSURES ON UT FOOTBALL WEEKENDS ARE NOT PERMITTED STARTING FRIDAY BEFORE: AUG. 30, SEPT. 6, OCT. 4, OCT. 11, OCT. 25, NOV. 15, NOV. 22

TYPICAL I-40 LANE CLOSURE

NOT TO SCALE
RIGHT LANE CLOSURE SHOWN
LEFT LANE CLOSURE SIMILAR

SEE SHEET 2C FOR OTHER TRAFFIC CONTROL NOTES AND INFORMATION

END OF TRAFFIC QUEUE PROTECTION

WHEN INTERSTATE LANE CLOSURES ARE PERFORMED, THE CONTRACTOR SHALL PROVIDE A MINIMUM OF TWO (2) MOBILE CHANGEABLE MESSAGE SIGN UNITS WITH MOUNTED ATTENUATOR FOR EACH TRAVELING DIRECTION IN WHICH LANES ARE CLOSED, TO PROTECT THE END OF THE TRAFFIC QUEUE WITH FOLLOWING CONDITIONS:

A. AT LEAST ONE UNIT SHALL BE POSITIONED ON THE SHOULDER UPSTREAM FROM THE END OF THE TRAFFIC QUEUE AT ALL TIMES, BUT NO FURTHER THAN ½ MILE FROM THE QUEUE.

B. THE CHANGEABLE MESSAGE SIGN SHALL DISPLAY TWO PHASES: "STOPPED TRAFFIC AHEAD" AND "BE PREPARED TO STOP".

C. IN THE EVENT THAT THE TRAFFIC QUEUE EXTENDS UPSTREAM BEYOND THE UNIT, A SECOND UNIT SHALL MOBILIZE IN ACCORDANCE WITH (A). THE DOWNSTREAM UNIT MAY DEPART WHEN THE SECOND UNIT HAS MOVED INTO POSITION.

D. CHANGEABLE MESSAGE SIGNS AND ATTENUATORS SHALL BE IN ACCORDANCE WITH THE NCHRP REPORT 350, MUTCD, INCLUDED IN THE TDOT QUALIFIED PRODUCTS LIST, AND MOUNTED PER THE MANUFACTURER'S RECOMMENDATIONS.

E. MOBILE CHANGEABLE MESSAGE SIGN UNITS WITH MOUNTED ATTENUATOR WILL BE PAID FOR AS ITEM NO. 712-08.10, MOBILE MESSAGE SIGN UNIT W/ ATTENUATOR, PER HOUR. ALL COSTS ARE TO BE INCLUDED IN THE PRICE BID.

STATE OF TENNESSEE
DEPARTMENT OF TRANSPORTATION

TRAFFIC CONTROL PLAN - I40

BR. NO. 71-SR056-00.54

TENNESSEE D.O.T.	
DESIGN DIVISION	
FILE NO.	

TYPE	YEAR	PROJECT NO.	SHEET NO.
CONST.	2014	71006-4111-04	2F

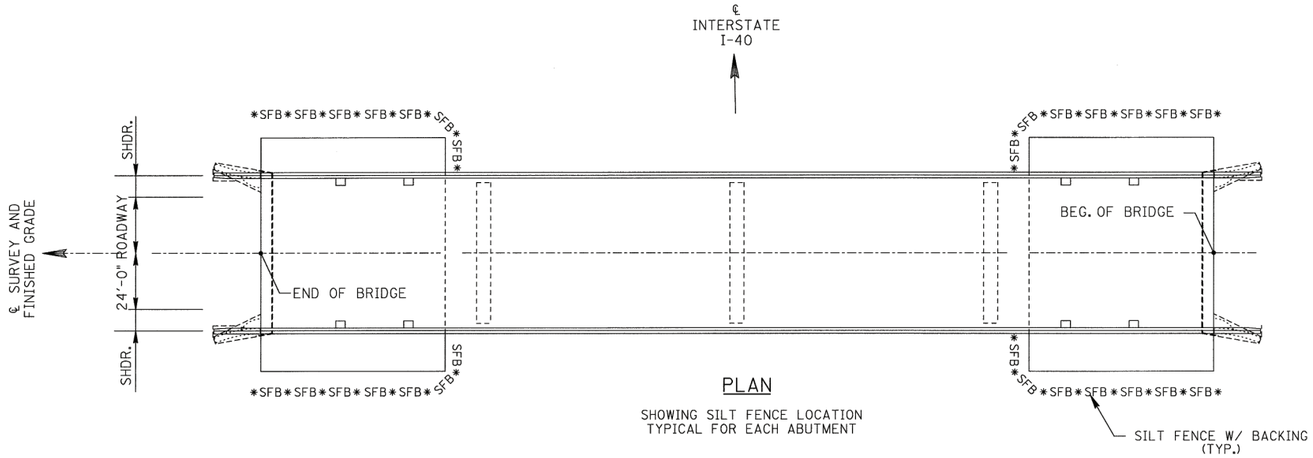

PLAN

SHOWING SILT FENCE LOCATION
TYPICAL FOR EACH ABUTMENT

EROSION PREVENTION AND SEDIMENT CONTROL NOTES

1. INSPECTION, REPAIR, AND MAINTENANCE OF EPSC MEASURES/STRUCTURES IS TO BE PERFORMED ON A REGULAR BASIS. SEDIMENT SHALL BE REMOVED FROM SEDIMENT CONTROL STRUCTURES WHEN THE DESIGN CAPACITY HAS BEEN REDUCED BY FIFTY PERCENT (50%). DURING SEDIMENT REMOVAL, THE CONTRACTOR SHALL TAKE CARE TO ENSURE THAT STRUCTURAL COMPONENTS OF EPSC MEASURES ARE NOT DAMAGED AND THUS MADE INEFFECTIVE. IF DAMAGE DOES OCCUR, THE CONTRACTOR SHALL REPAIR THE STRUCTURES AT THE CONTRACTOR'S OWN EXPENSE.

2. SEDIMENT REMOVED FROM SEDIMENT CONTROL STRUCTURES SHALL BE PLACED AND BE TREATED IN A MANNER SO THAT THE SEDIMENT IS CONTAINED WITHIN THE PROJECT LIMITS AND DOES NOT MIGRATE INTO WATERS OF THE STATE/U.S. COST FOR THIS TREATMENT IS TO BE INCLUDED IN PRICE BID FOR ITEM NO. 209-05 SEDIMENT REMOVAL, C.Y.

3. THE CONTRACTOR SHALL INSTALL A RAIN GAUGE EVERY LINEAR MILE AT ALL SITES WHERE CLEARING, GRUBBING, EXCAVATION, GRADING, CUTTING OR FILLING IS BEING ACTIVELY PERFORMED, OR EXPOSED SOIL HAS NOT YET BEEN PERMANENTLY STABILIZED. IF THE PROJECT LENGTH IS LESS THAN ONE LINEAR MILE, ONE RAIN GAUGE SHALL BE INSTALLED AT THE CENTER OF THE PROJECT OR AS INDICATED BY THE TDOT EPSC INSPECTOR. THE CONTRACTOR SHALL ENSURE THAT EACH GAUGE IS MAINTAINED IN GOOD WORKING CONDITION. TDOT AND/OR THE CONTRACTOR SHALL RECORD DAILY PRECIPITATION AND FORECASTED PERCENTAGE OF PRECIPITATION IN DETAILED RECORDS OF RAINFALL EVENTS INCLUDING DATES, AMOUNTS OR RAINFALL PER GAUGE, THE ESTIMATED DURATION (OR STARTING AND ENDING TIMES), AND FORECASTED PERCENTAGE OF PRECIPITATION FOR THE PROJECT. THIS INFORMATION SHALL BE PROVIDED TO THE ENGINEER ON A MONTHLY BASIS. THE COST FOR THE RAIN GAUGES IS TO BE INCLUDED IN THE UNIT BID PRICES FOR OTHER ITEMS. RAIN GAUGES SHALL BE AS SPECIFIED IN THE APPROVED TDOT RAINFALL MONITORING PLAN.

4. INSPECTION OF EPSC MEASURES SHALL BE DONE AT LEAST TWICE PER CALENDAR WEEK AT LEAST 72 HOURS APART. A CALENDAR WEEK IS DEFINED AS SUNDAY THROUGH SATURDAY.

5. OUTFALL POINTS SHALL BE INSPECTED TO ASCERTAIN WHETHER EPSC MEASURES ARE EFFECTIVE IN PREVENTING SIGNIFICANT IMPACTS TO SURROUDING WATERS. WHERE DISCHARGE LOCATIONS ARE INACCESSIBLE, NEARBY DOWNSTREAM LOCATIONS SHALL BE INSPECTED. LOCATIONS WHERE VEHICLES ENTER AND EXIT THE SITE SHALL BE INSPECTED FOR EVIDENCE OF OFF-SITE ROADWAY SEDIMENT TRACKING.

6. UPON CONCLUSION OF THE INSPECTIONS, EPSC MEASURES FOUND TO BE INEFFECTIVE SHALL BE REPAIRED, REPLACED OR MODIFIED BEFORE THE NEXT RAIN EVENT, IF POSSIBLE, BUT IN NO CASE MORE THAN 24 HOURS AFTER THE INSPECTION OR WHEN THE CONDITION IS IDENTIFIED. IF THE REPAIR, REPLACEMENT OR MODIFICATION IS NOT PRACTICAL WITHIN THE TIMEFRAME, WRITTEN DOCUMENTATION MUST BE PROVIDED IN THE FIELD BOOK AND AN ESTIMATED REPAIR, REPLACEMENT OR MODIFICATION SCHEDULE SHALL BE DOCUMENTED WITHIN 24 HOURS AFTER IDENTIFICATION.

7. THE CONTRACTOR SHALL ESTABLISH AND MAINTAIN A PROACTIVE METHOD TO PREVENT LITTER, CONSTRUCTION DEBRIS, AND CONSTRUCTION WASTES FROM ENTERING WATERS OF THE STATE/U.S.

8. THE CONTRACTOR SHALL TAKE APPROPRIATE STEPS TO ENSURE THAT PETROLEUM PRODUCTS OR OTHER CHEMICAL POLLUTANTS ARE PREVENTED FROM ENTERING WATERS OF THE STATE/U.S. ALL EQUIPMENT REFUELING, SERVICING, AND STAGING AREAS SHALL COMPLY WITH ALL LOCAL, STATE, AND FEDERAL LAWS, RULES, REGULATIONS, AND ORDINANCES, INCLUDING THOSE OF THE NATIONAL FIRE PROTECTION ASSOCIATION (NFPA). APPROPRIATE CONTAINMENT MEASURES FOR THESE AREAS SHALL BE USED. ALL SPILLS MUST BE REPORTED TO THE APPROPRIATE AGENCY, AND MEASURES SHALL BE TAKEN IMMEDIATELY TO PREVENT THE POLLUTION OF WATERS OF THE STATE/U.S., INCLUDING GROUNDWATER, SHOULD A SPILL OCCUR.

UNOFFICIAL SET

NOT FOR BIDDING

2/02/14

STATE OF TENNESSEE
DEPARTMENT OF TRANSPORTATION

EROSION CONTROL DETAILS & NOTES

BR. NO. 71-SR056-00.54

PROJECT NO.	YEAR	SHEET NO.
71006-4111-04	2014	

REVISIONS

NO.	DATE	BY	BRIEF DESCRIPTION

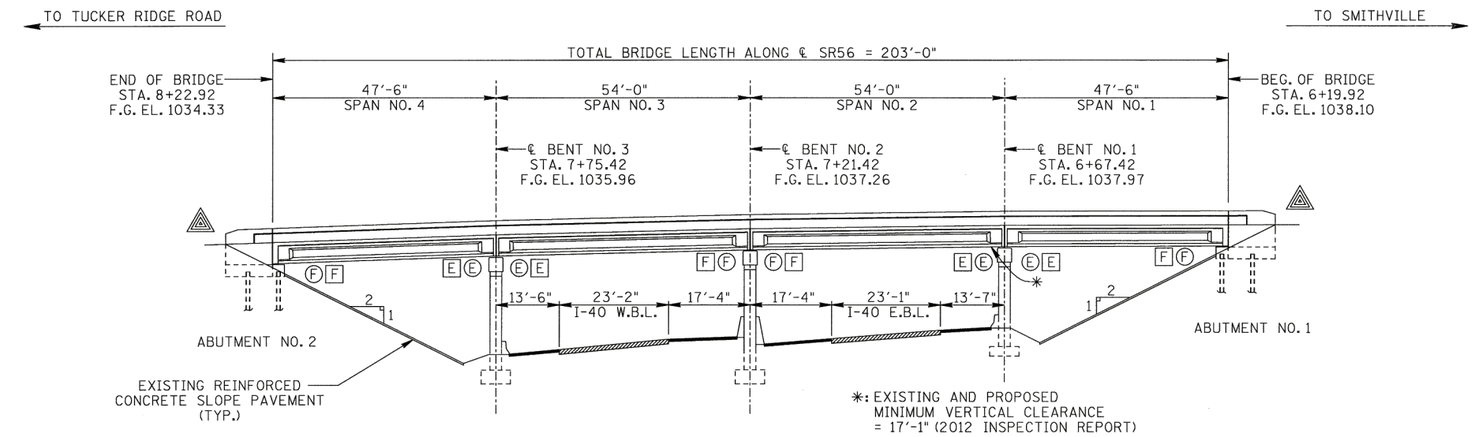

ELEVATION

E: DENOTES EXPANSION SUPPORT
F: DENOTES FIXED SUPPORT

○ : DENOTES EXISTING SUPPORT CONDITION

□ : DENOTES PROPOSED SUPPORT CONDITION

△ : PROVIDE GUARDRAIL ATTACHMENT TO PARAPET IN ACCORDANCE WITH TDOT STD. DWG. S-GRC-1.

N

LIST OF BRIDGE DRAWINGS

DWG. NO.	REV.	DESCRIPTION
BR-116-130		LAYOUT OF BRIDGE TO BE REPAIRED
BR-116-131		BRIDGE GENERAL NOTES AND ESTIMATED QUANTITIES
BR-116-132		PHASED CONSTRUCTION DETAILS
BR-116-133		SUPERSTRUCTURE
BR-116-134		SLAB PLAN & DETAILS
BR-116-135		FRAMING PLAN & DETAILS
BR-116-136		WING REPLACEMENT DETAILS
BR-116-137		CONCRETE REPAIRS
BR-116-138		EPOXY INJECTION DETAILS

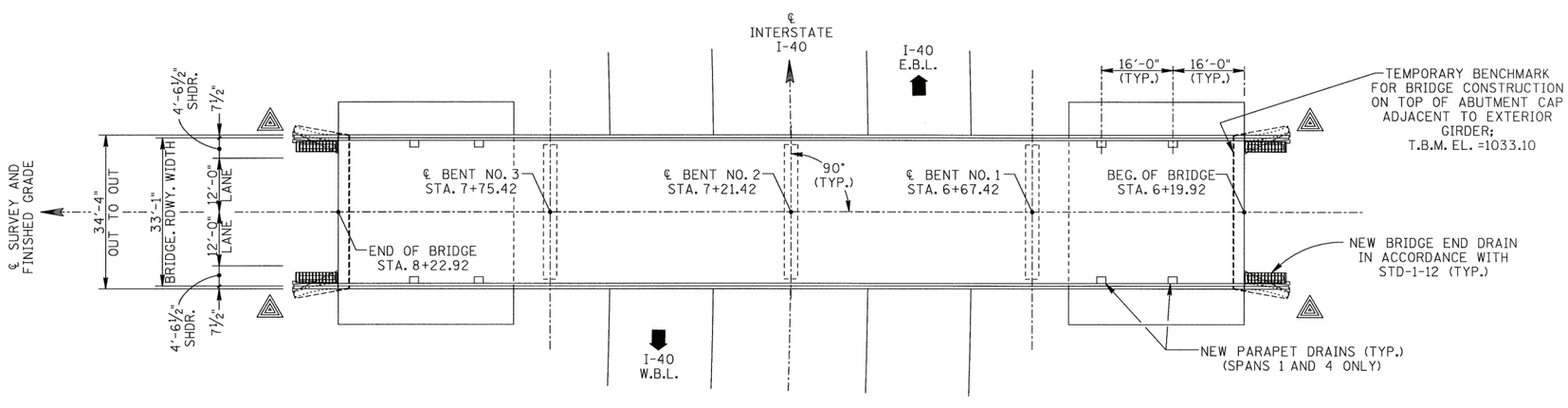

PLAN

LIST OF REFERENCE DRAWINGS

(TO BE PRINTED WITH PLANS)

DWG. NO.	DESCRIPTION
BR-8-3	1993 BRIDGE REPAIRS
G-3-27A THRU G-3-27C	1985 BRIDGE REPAIRS
G-3-27 THRU G-3-31	1958 ORIGINAL PLANS

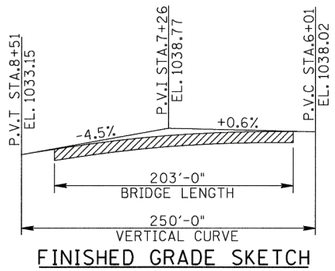

FINISHED GRADE SKETCH

NOTE: CONTRACTOR TO FIELD VERIFY THAT EXISTING SUBSTRUCTURE ELEVATIONS ARE IN CONFORMANCE WITH EXISTING PLANS PRIOR TO START OF CONSTRUCTION (UTILIZING THE TEMPORARY BENCH MARK AS DESCRIBED HEREIN). NOTIFY THE ENGINEER IF ABUTMENT AND BENT CAP ELEVATIONS ARE NOT WITHIN 0.04 FT. OF ORIGINAL PLANS ELEVATIONS.

NOTE: TEMPORARY BENCH MARK (T.B.M.) FOR BRIDGE CONSTRUCTION TO BE TOP OF CAP AT ABUTMENT NO. 1 ELEVATION 1033.10.

NOTE: THE TEMPORARY BENCH MARK AS DESCRIBED SHALL BE USED IN LIEU OF ACTUAL U.S.G.S. ELEVATIONS.

SCOPE OF WORK

1. PROVIDE SIGNALIZED TRAFFIC CONTROL TO ALLOW FOR PHASED DEMOLITION AND REPLACEMENT OF THE EXISTING 9½" THICK COMPOSITE DECK WITH A NEW 8¼" THICK COMPOSITE CONCRETE DECK. ONE 12'-0" LANE OF TRAFFIC SHALL REMAIN OPEN AT ALL TIMES DURING CONSTRUCTION.
2. PROVIDE TEMPORARY SLAB SUPPORT AND 100% SHIELDING DURING DEMOLITION AND CONSTRUCTION SO AS TO FULLY PROTECT INTERSTATE TRAFFIC AT ALL TIMES FROM FALLING DEBRIS.
3. DEMOLISH EXISTING WINGWALLS IN EACH PHASE TO THE TOP OF EXISTING WING FOOTINGS AND MODIFY FOOTINGS TO ACCEPT NEW REINFORCED CONCRETE WINGWALLS AND ENDPOSTS FOR TYPE STD-1-1SS BRIDGERAIL.
4. CONSTRUCT REQUIRED SUBSTRUCTURE REPAIRS TO ABUTMENTS AND BENT IN EACH PHASE.
5. DEMOLISH EXISTING FLUME DRAINS AND CONSTRUCT NEW BRIDGE END DR IN ACCORDANCE WITH STANDARD DRAWING STD-1-12.
6. CONSTRUCT NEW APPROACH GUARDRAIL, ASHPALT TRANSITIONS, AND ROAD STRIPING.
7. APPLY TEXTURE COATING TO NEW AND EXISTING SURFACES IN ACCORDA WITH PLANS DETAILS AND TDOT SPECIFICATIONS.

SR56 LOG MILE
DIRECTION →

NOTE: SR 56 LOG MILE RUNS IN OPPOSITE DIRECTION FROM THE BRIDGE REPAIR PLANS

UNOFFICIAL
SET

NOT FOR
BIDDING

STATE OF TENNESSEE
NO. 13774
STATE OF TENNESSEE

STATE OF TENNESSEE
DEPARTMENT OF TRANSPORTATION
BUREAU OF HIGHWAYS

LAYOUT OF BRIDGE TO BE REPAIRED
STATE ROUTE 56
OVER
INTERSTATE 40
BRIDGE NO. 71-SR056-00.54
PUTNAM COUNTY
2014

DESIGNED BY	WAP	DATE	01-14
DRAWN BY	WAP, MLP	DATE	01-14
SUPERVISED BY	WAP	DATE	01-14
CHECKED BY	WAP	DATE	01-14

BR-116-130

PROJECT NO.	YEAR	SHEET NO.
71006-4111-04	2014	

REVISIONS

NO.	DATE	BY	BRIEF DESCRIPTION

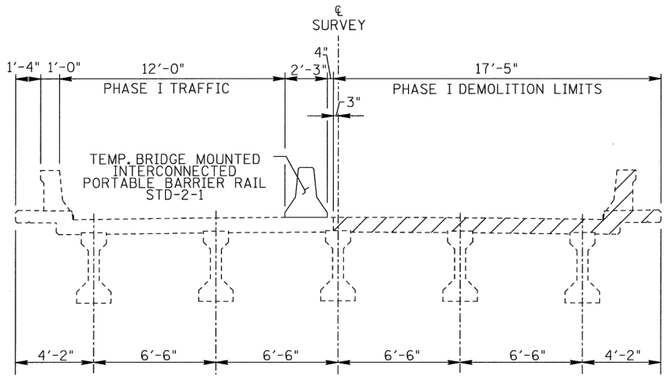

PHASE I TRAFFIC CONTROL & DEMOLITION

LOOKING BACK ON SURVEY

DENOTES AREAS OF CONCRETE DECK, CURB & RAILING REMOVAL

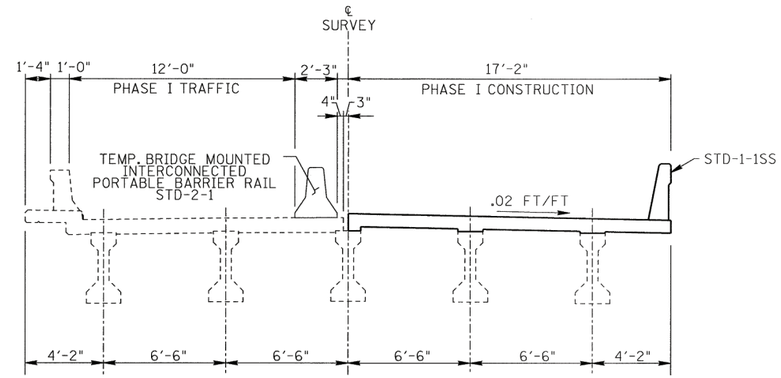

PHASE I CONSTRUCTION

LOOKING BACK ON SURVEY

NOTE: THE CONTRACTOR SHALL PROVIDE 100% SHIELDING DURING SLAB DEMOLITION AND CONSTRUCTION SO AS TO PREVENT DEBRIS OR CONSTRUCTION MATERIALS FROM FALLING ONTO THE ROADWAY BELOW.
SEE SPECIAL NOTE ON SHEET NO. 2E FOR ADDITIONAL INFORMATION.

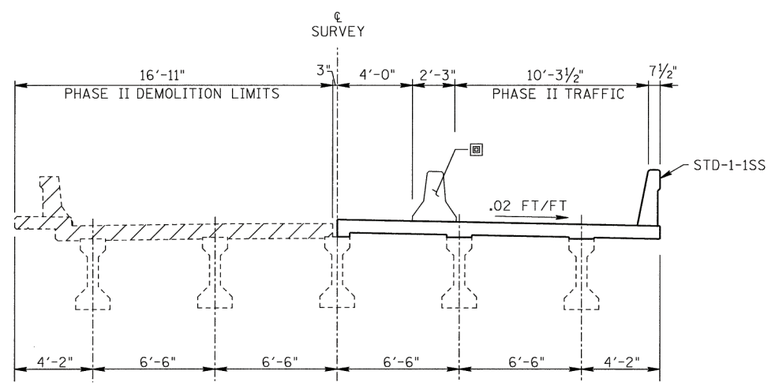

PHASE II TRAFFIC CONTROL & DEMOLITION

LOOKING BACK ON SURVEY

DENOTES AREAS OF CONCRETE DECK, CURB & RAILING REMOVAL

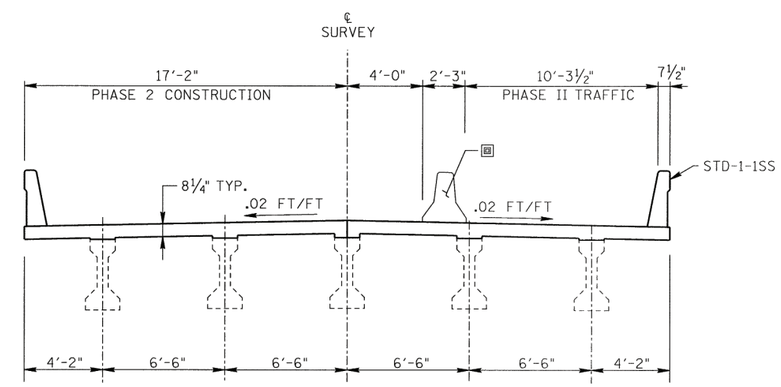

TEMP. BRIDGE MOUNTED INTERCONNECTED PORTABLE BARRIER RAIL STD-2-1 WITHOUT ANCHOR BOLTS ATTACHED TO NEW DECK

PHASE II CONSTRUCTION

LOOKING BACK ON SURVEY

UNOFFICIAL SET

NOT FOR BIDDING

STATE OF TENNESSEE

STATE OF TENNESSEE
DEPARTMENT OF TRANSPORTATION
BUREAU OF HIGHWAYS

PHASED CONSTRUCTION DETAILS
STATE ROUTE 56
OVER
INTERSTATE 40
BRIDGE NO.71-SR056-00.54
PUTNAM COUNTY
2014

DESIGNED BY	WAP	DATE	01-14
DRAWN BY	MLP	DATE	01-14
SUPERVISED BY	WAP	DATE	01-14
CHECKED BY	WAP	DATE	01-14

BR-116-132

PROJECT NO.	YEAR	SHEET NO.
71006-4111-04	2014	

REVISIONS

NO.	DATE	BY	BRIEF DESCRIPTION

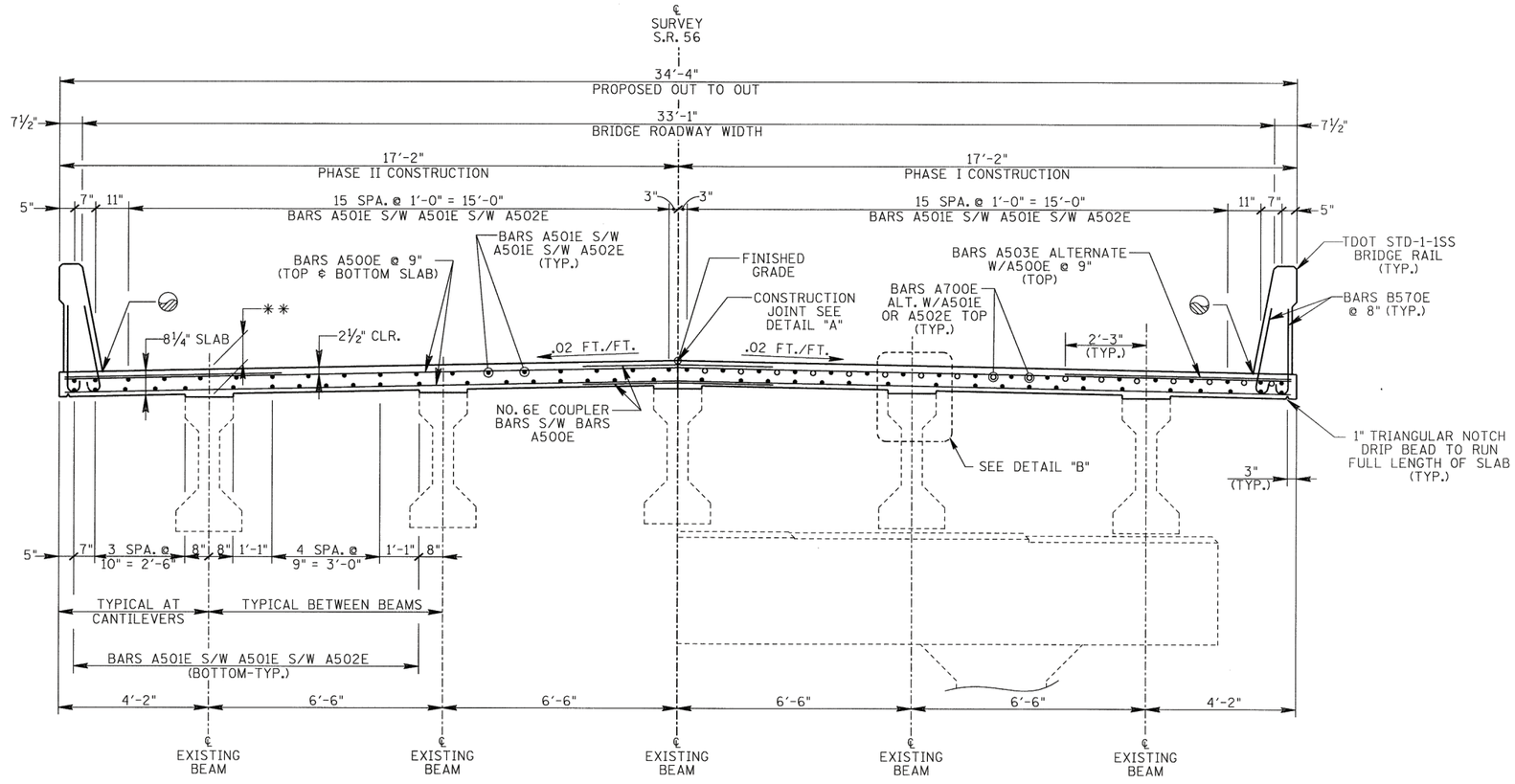

HALF SECTION @ MID-SPAN

HALF SECTION @ SUPPORT

TYPICAL CROSS SECTION

LOOKING BACK ON SURVEY

** : INDICATES 9¼" AT ℄ BEARINGS OVER EXTERIOR BEAMS

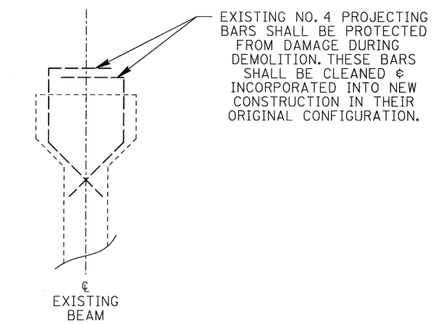

DETAIL "B"

SHOWING PRESERVATION OF EXISTING PROJECTING BARS

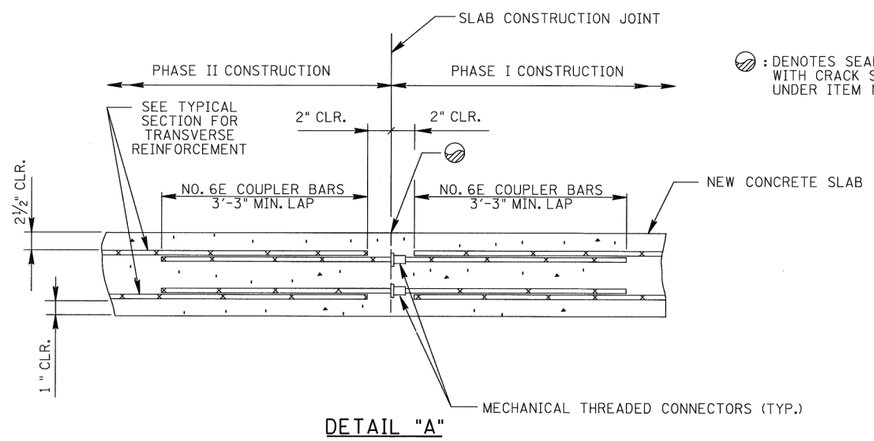

: DENOTES SEAL CONSTRUCTION JOINTS WITH CRACK SEALER TO BE PAID FOR UNDER ITEM NOS. 617-02 AND 617-05

DETAIL "A"

SHOWING TRANSVERSE REINFORCING STEEL SPLICING WITH MECHANICAL THREADED CONNECTORS

NOTE: COST OF MECHANICAL THREADED CONNECTORS AND NO. 6 COUPLER BARS WITHIN THE NEW CONCRETE SLAB SHALL BE PAID FOR UNDER ITEM NO. 604-02.03, EPOXY COATED REINFORCING STEEL.

SUPERSTRUCTURE NOTES:

NOTE: THE CONTRACTOR IS SOLELY RESPONSIBLE FOR SUPPORTING THE BEAMS TO PREVENT DAMAGE DUE TO TWISTING OR OVERTURNING DURING ALL PHASES OF CONSTRUCTION.

NOTE: WHEN POURING SLAB, PROVISIONS SHALL BE MADE FOR SETTING REINFORCING STEEL FOR PARAPET. THE PARAPET SHALL NOT BE POURED UNTIL THE SLAB IS POURED AND CURED. SEE STANDARD DRAWING NO. STD-1-1SS FOR PARAPET.

NOTE: ALL COSTS ASSOCIATED WITH THE NEW 8¼" CONCRETE DECK SLAB SHALL BE PAID FOR UNDER ITEM NO. 604-03.09, CLASS "D" CONCRETE (BRIDGE DECK), CY.

NOTE : COST OF EPOXY COATED REINFORCING STEEL INCLUDING MECHANICAL THREADED CONNECTORS SHALL BE PAID FOR UNDER ITEM NO. 604-02.03, EPOXY COATED REINFORCING STEEL , LB. SEE BILL OF STEEL AND BAR BENDS ON DWG NO. BR-116-134.

ESTIMATED QUANTITIES

ITEM NO. 604-03.09	ITEM NO. 604-02.03
CLASS "D" CONCRETE C.Y.	EPOXY COATED REINFORCING STEEL LBS.
185	51,445

STATE OF TENNESSEE
DEPARTMENT OF TRANSPORTATION
BUREAU OF HIGHWAYS

UNOFFICIAL SET
NOT FOR BIDDING

SUPERSTRUCTURE
STATE ROUTE 56
OVER
INTERSTATE 40
BRIDGE NO. 71-SR056-00.54
PUTNAM COUNTY
2014

DESIGNED BY	WAP	DATE	01-14
DRAWN BY	WAP, MLP	DATE	01-14
SUPERVISED BY	WAP	DATE	01-14
CHECKED BY	WAP	DATE	01-14

BR-116-133

PROJECT NO.	YEAR	SHEET NO.
71006-4111-04	2014	

REVISIONS

NO.	DATE	BY	BRIEF DESCRIPTION

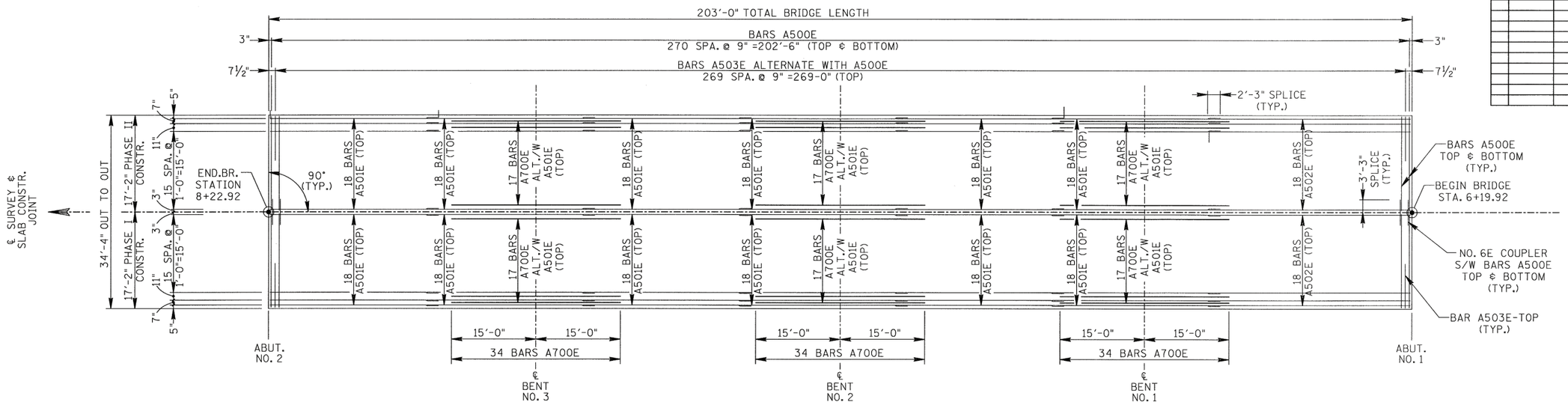

SHOWING REINFORCEMENT

NOTE: SEE SUPERSTRUCTURE CROSS SECTION FOR BOTTOM OF SLAB LONGITUDINAL BARS.

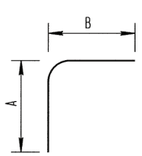

BARS R

SUPERSTRUCTURE EPOXY

BAR	LOCATION	SIZE	NO. REQ'D	BENDING DIMENSIONS A	B	C	D	LENGTH
A500E	SLAB	5	1088					16'-10"
A501E	SLAB	5	444					30'-0"
A502E	SLAB	5	74					36'-2"
A503E	SLAB	5	540					6'-3"
A700E	SLAB	7	102					30'-0"
R500E	SLAB	5	72	1'-9"	2'-3"			4'-0"
NO. 6 COUPLER BAR (EPOXY)		6	544					6'-10"

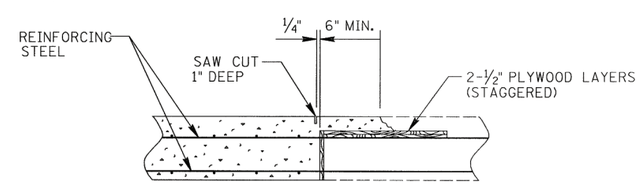

SLAB CONSTRUCTION JOINT DETAIL

NOTE: SLAB CONSTRUCTION JOINTS MAY BE LOCATED AT THE CONTRACTOR'S OPTION EXCEPT NO JOINT MAY BE LOCATED CLOSER THAN 1/5 SPAN LENGTH FROM AN INTERIOR SUPPORT. THE CONTRACTOR SHALL MAKE ADEQUATE PROVISIONS DURING PLACEMENT OF SLAB TO PREVENT THE EXTERIOR BEAM FROM TWISTING. NO EQUIPMENT SHALL BE PERMITTED ON THE BRIDGE UNTIL ALL POURS ARE MADE AND THE CONCRETE IS PROPERLY CURED. ALL SLAB CONSTRUCTION JOINTS SHALL BE IN ACCORDANCE WITH THE SLAB CONSTRUCTION JOINT DETAIL SHOWN ABOVE.

UNOFFICIAL SET

NOT FOR BIDDING

STATE OF TENNESSEE
DEPARTMENT OF TRANSPORTATION
BUREAU OF HIGHWAYS

SLAB PLAN AND DETAILS
STATE ROUTE 56
OVER
INTERSTATE 40
BRIDGE NO.71-SR056-00.54
PUTNAM COUNTY
2014

DESIGNED BY _____ DATE 01-14
DRAWN BY _____ DATE 01-14
SUPERVISED BY _____ DATE 01-14
CHECKED BY _____ DATE 01-14

BR-116-134

PROJECT NO.	YEAR	SHEET NO.
71006-4111-04	2014	

REVISIONS

NO.	DATE	BY	BRIEF DESCRIPTION

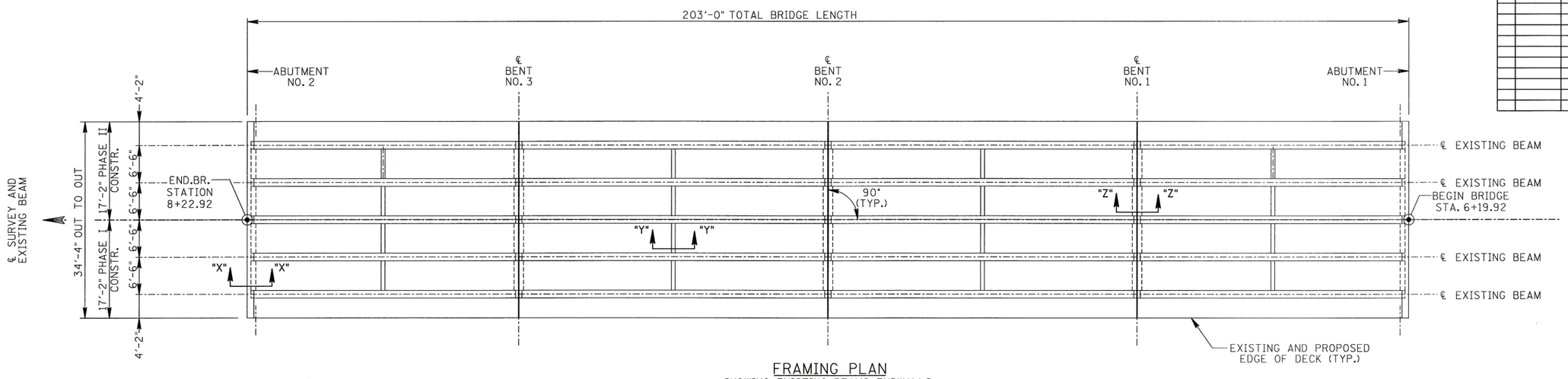

FRAMING PLAN
SHOWING EXISTING BEAMS, ENDWALLS, AND DIAPHRAGMS

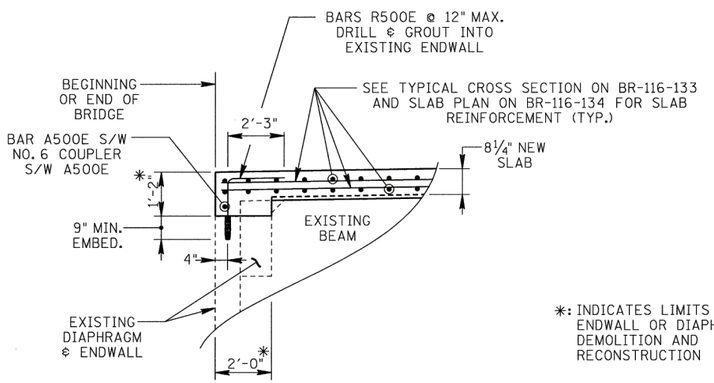

SECTION "X-X"

*: INDICATES LIMITS OF ENDWALL OR DIAPHRAGM DEMOLITION AND RECONSTRUCTION

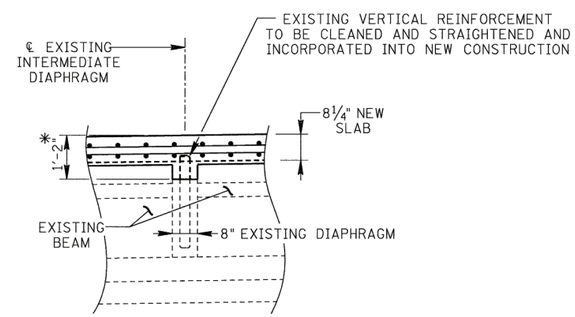

SECTION "Y-Y"

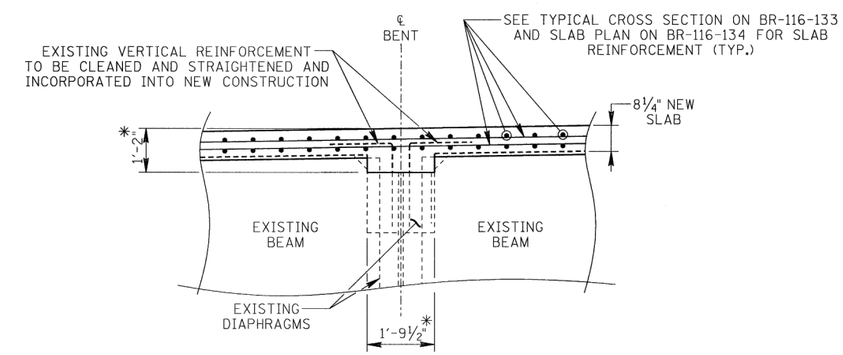

SECTION "Z-Z"

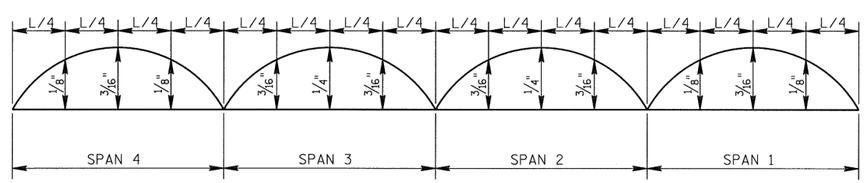

DEAD LOAD CORRECTION CURVE

DEAD LOAD CORRECTION CURVE: THIS CURVE IS FOR DEAD LOAD SLAB AND ALL DEAD LOADS THAT ARE APPLIED AFTER SLAB IS IN PLACE AND SHOULD BE CORRECTED TO COMPENSATE FOR EFFECTS DUE TO VERTICAL CURVE. IF PRESTRESSED DECK PANELS ARE USED AND THE BEAMS ARE PROFILED AFTER PANELS ARE IN PLACE, REDUCE THE DEAD LOAD CORRECTION VALUES SHOWN BY 25%.

UNOFFICIAL SET

NOT FOR BIDDING

STATE OF TENNESSEE
DEPARTMENT OF TRANSPORTATION
BUREAU OF HIGHWAYS

FRAMING PLAN AND DETAILS
STATE ROUTE 56
OVER
INTERSTATE 40
BRIDGE NO.71-SR056-00.54
PUTNAM COUNTY
2014

DESIGNED BY	WAP	DATE	01-14
DRAWN BY	MP/WAP	DATE	01-14
SUPERVISED BY	WAP	DATE	01-14
CHECKED BY	WAP	DATE	01-14

BR-116-135

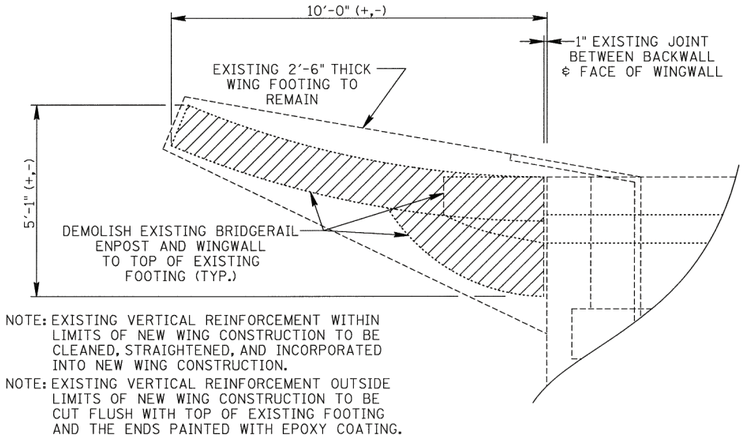

NOTE: EXISTING VERTICAL REINFORCEMENT WITHIN LIMITS OF NEW WING CONSTRUCTION TO BE CLEANED, STRAIGHTENED, AND INCORPORATED INTO NEW WING CONSTRUCTION.

NOTE: EXISTING VERTICAL REINFORCEMENT OUTSIDE LIMITS OF NEW WING CONSTRUCTION TO BE CUT FLUSH WITH TOP OF EXISTING FOOTING AND THE ENDS PAINTED WITH EPOXY COATING.

PLAN @ EXISTING WINGWALL

SHOWING WING DEMOLITION
(TYPICAL @ EACH WING)

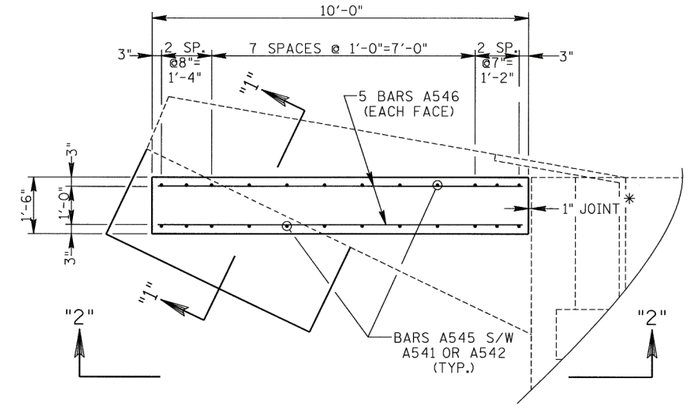

PLAN @ NEW WING

SHOWING REINFORCEMENT

*: SEE JOINT DETAIL THIS SHEET FOR SEALANT.

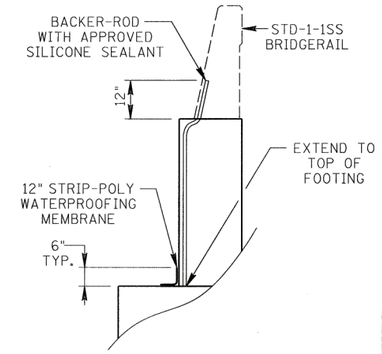

JOINT DETAIL

TO BE APPLIED INTO OPEN JOINT

PROJECT NO.	YEAR	SHEET NO.
71006-4111-04	2014	

REVISIONS

NO.	DATE	BY	BRIEF DESCRIPTION

NOTE: VIEWS ARE SHOWN AT END OF BRIDGE RIGHT WING OR BEGINNING OF BRIDGE LEFT WING. OTHER WINGS ARE SIMILAR BUT OPPOSITE HAND.

ESTIMATED QUANTITIES- TOTAL FOR ALL 4 WINGS	
ITEM NO. 604-03.01	ITEM NO. 604-03.02
CLASS "A" CONCRETE C.Y.	STEEL BAR REINFORCING LBS.
17	2073

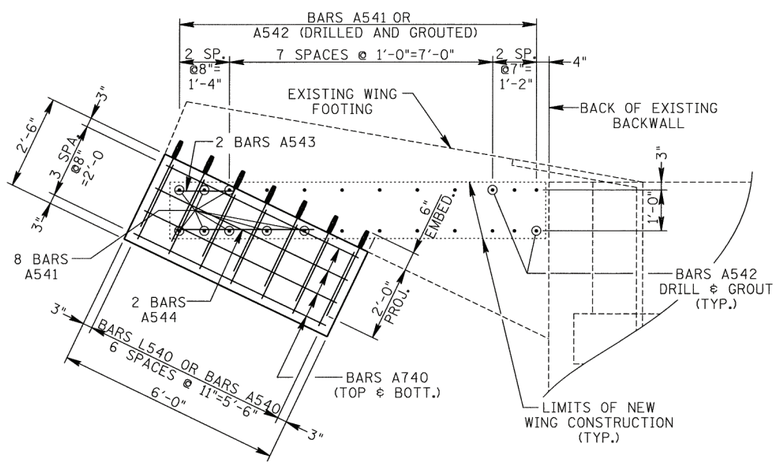

PLAN @ ADDITION TO EXISTING WINGWALL FOOTING

SHOWING FOOTING ADDITION AND REINFORCEMENT
(TYPICAL @ EACH WING FOOTING)

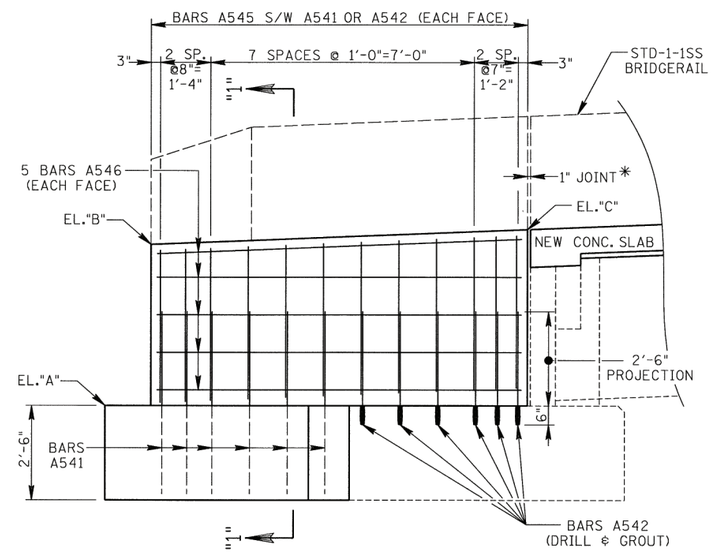

WING ELEVATION "2-2"

SHOWING WING REINFORCEMENT

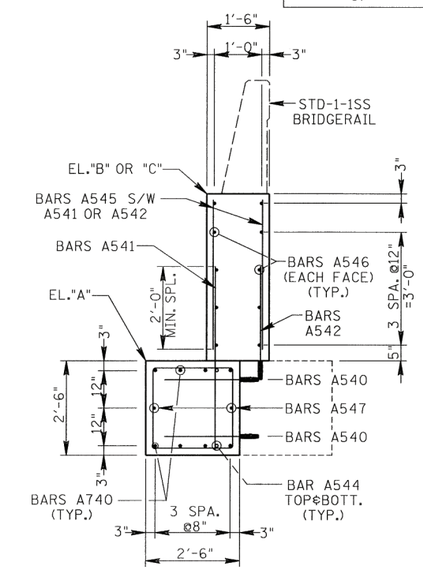

SECTION "1-1"

SHOWING WING & FOOTING REINFORCEMENT

TABLE OF ELEVATIONS

	EL."A"	EL."B"	EL."C"
ABUT. 1	1033.10	1037.75	1037.78
ABUT. 2	1033.60	1029.34	1034.01

BILL OF STEEL NON-EPOXY - TOTAL FOR ALL 4 WINGS

BAR	LOCATION	SIZE	NO. REQ'D	BENDING DIMENSIONS A	B	C	D	LENGTH	BAR	LOCATION	SIZE	NO. REQ'D	BENDING DIMENSIONS A	B	C	D	LENGTH
A540	WING	5	56					2'-8"	A545	WING	5	96					4'-1"
A541	WING	5	32					4'-10"	A546	WING	5	40					9'-8"
A542	WING	5	64					3'-0"	A547	WING	5	8					5'-8"
A543	WING	5	8					1'-5"	A740	WING	7	32					5'-8"
A544	WING	5	8					3'-8"	L540	WING	5	28	2'-2"	1'-0"	2'-2"		9'-8"

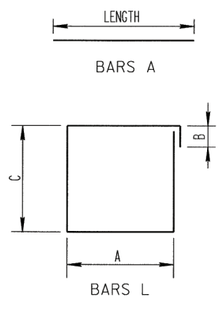

DESIGNED BY WAP DATE 01-14
DRAWN BY TRC CADD DATE 01-14
SUPERVISED BY WAP DATE 01-14
CHECKED BY WAP DATE 01-14

UNOFFICIAL SET
NOT FOR BIDDING

STATE OF TENNESSEE
DEPARTMENT OF TRANSPORTATION
BUREAU OF HIGHWAYS

WING REPLACEMENT DETAILS
STATE ROUTE 56
OVER
INTERSTATE 40
BRIDGE NO.71-SR056-00.54
PUTNAM COUNTY
2014

BR-116-136

PROJECT NO.	YEAR	SHEET NO.
71006-4111-04	2014	

REVISIONS

NO.	DATE	BY	BRIEF DESCRIPTION

DENOTES: APPROXIMATE AREAS TO BE REPAIRED WITH QUICK-SET PATCHING MATERIAL, ITEM NO. 604-10.54. SEE DETAILS AND NOTE ON THIS DRAWING.

DENOTES: APPROXIMATE AREAS TO BE REPAIRED WITH HIGH EARLY STRENGTH CONCRETE, ITEM NO. 604-10.05. SEE DETAILS AND NOTE ON THIS DRAWING.

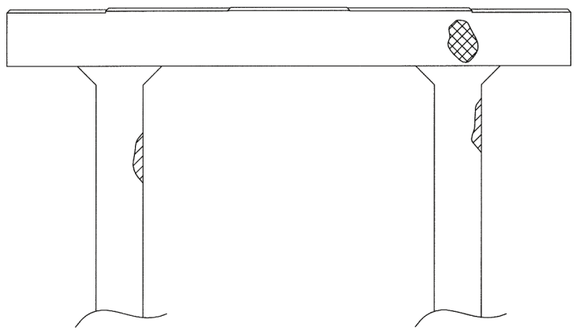

TYPICAL BENT ELEVATION

SHOWING TYPICAL REPAIR AREAS ON BENT NOS. 1, 2 & 3

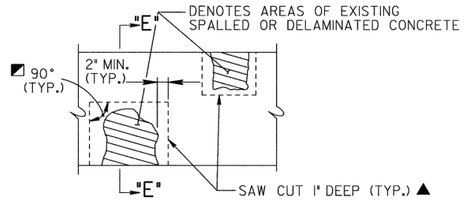

DETAIL SHOWING AREAS OF EXISTING SPALLED OR DELAMINATED CONCRETE SURFACES TO BE REMOVED AND REPAIRED

◪ DENOTES: SAW CUT EXISTING CONCRETE SURFACES SO AS TO OBTAIN SQUARED CORNERS. EDGES SHALL NOT BE FEATHERED OR TAPERED.

▲ DENOTES: SAW CUTS IN SUBSTRUCTURE SHALL BE ONE INCH DEEP. EXTREME CAUTION SHALL BE TAKEN TO PREVENT DAMAGE TO EXISTING REINFORCEMENT. APPROXIMATE CLEARANCE TO REINFORCEMENT SHALL BE DETERMINED IN THE FIELD BY THE CONTRACTOR PRIOR TO SAW CUTTING. ALL REINFORCING STEEL SHALL BE COMPLETELY CLEANED TO REMOVE ALL RUST. ALL EXISTING REINFORCING SHALL REMAIN IN PLACE. ALL WORK MUST MEET WITH FULL APPROVAL OF ENGINEER.

NOTE: LIMITS AND LOCATION OF REPAIRS TO BE DESIGNATED BY THE ENGINEER. MIN. DEPTH FOR QUICK-SET PATCHING REPAIR AREAS IS 2" AND FOR HIGH EARLY STRENGTH REPAIR AREAS IS 4". DEPTH MAY BE INCREASED TO EXTEND INTO SOUND CONCRETE AS DIRECTED BY THE ENGINEER.

ESTIMATED REPAIR QUANTITIES

LOCATION OF REPAIR	ITEM NO. 604-10.54 S.F.	ITEM NO. 604-10.05 S.F.
ABUT. NO. 1	18	24
BENT NO. 1	10	5
BENT NO. 2	10	5
BENT NO. 3	10	5
ABUT. NO. 2	68	23
SUPERSTRUCTURE	0	10
TOTAL	116	72

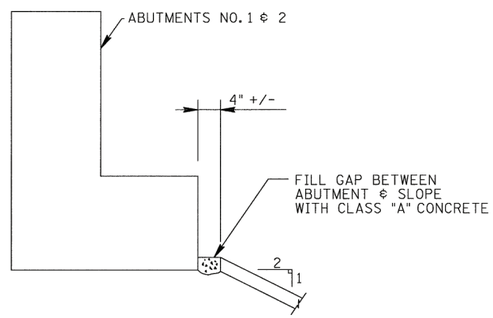

ABUTMENT CROSS SECTION

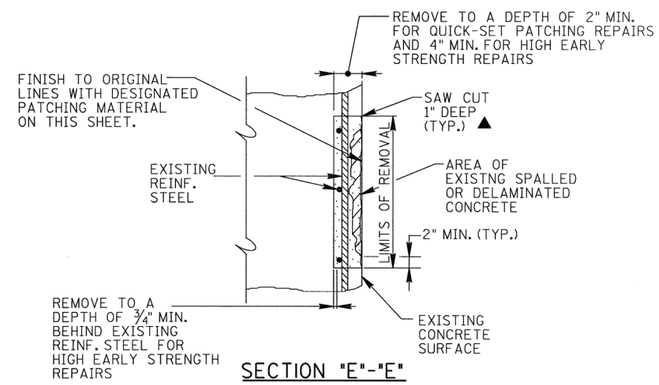

SECTION "E"-"E"

NOTE: THE COST OF REMOVING PORTIONS OF THE EXISTING CONCRETE WITHIN THE LIMITS SHOWN, SAW CUTTING, COMPLETELY CLEANING EXISTING REINFORCING STEEL, QUICK-SET PATCHING MATERIAL, HIGH EARLY STRENGTH CONCRETE, FORMING, LABOR AND ALL MISCELLANEOUS MATERIAL NECESSARY TO COMPLETE THE REPAIRS AS SHOWN SHALL BE INCLUDED IN PRICE BID FOR ITEM NO. 604-10.54 AND 604-10.05, CONCRETE REPAIRS, S.F.

NOTE: POWER DRIVEN HAND TOOLS USED FOR THE REMOVAL OF UNSOUND CONCRETE ARE SUBJECT TO THE FOLLOWING RESTRICTIONS:
1. PNEUMATIC HAMMERS HEAVIER THAN A 35 LB CLASS SHALL NOT BE USED.
2. CHIPPING HAMMERS OF THE 15 LB CLASS SHALL BE USED TO REMOVE CONCRETE FROM BEHIND THE REINFORCING STEEL.

NOTE: PATCHING MATERIAL SHALL BE POLYMER-MODIFIED CEMENTITIOUS STRUCTURAL PATCHING MATERIAL FROM THE TDOT QUALIFIED PRODUCTS LIST 13, SECTION B.6.

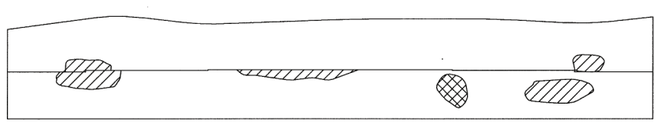

TYPICAL ABUTMENT ELEVATION

SHOWING TYPICAL REPAIR AREAS AT ABUTMENT NO. 1 (ABUTMENT NO. 2 SIMILAR)

UNOFFICIAL SET

NOT FOR BIDDING

STATE OF TENNESSEE

STATE OF TENNESSEE
DEPARTMENT OF TRANSPORTATION
BUREAU OF HIGHWAYS

CONCRETE REPAIRS
STATE ROUTE 56
OVER
INTERSTATE 40
BRIDGE NO. 71-SR056-00.54
PUTNAM COUNTY
2014

DESIGNED BY	WAP	DATE	01-14
DRAWN BY	MLP	DATE	01-14
SUPERVISED BY	WAP	DATE	01-14
CHECKED BY	WAP	DATE	01-14

BR-116-137

PROJECT NO.	YEAR	SHEET NO.
71006-4111-04	2014	

REVISIONS

NO.	DATE	BY	BRIEF DESCRIPTION

EPOXY INJECTION NOTES

UNLESS OTHERWISE NOTED THE INTENT OF THIS SPECIFICATION IS FOR DESIGNATED CRACKS TO BE INJECTED THEIR FULL LENGTH AND DEPTH. DESIGNATED CRACKS SHALL BE INJECTED WITH AN APPROVED EPOXY RESIN ADHESIVE FILLING ALL VOIDS FOR THE CRACK DEPTH OR THICKNESS OF THE MEMBER. THE EPOXY RESIN ADHESIVE SHALL BE ON THE CURRENT QUALIFIED PRODUCTS LIST MAINTAINED BY THE DIVISION OF MATERIALS AND TEST. ALL CRACKS SHALL BE INJECTED USING AN ADHESIVE SUITABLE FOR THE FIELD CONDITIONS (CRACK WIDTH, TEMPERATURE, HUMIDITY, ETC.) RECOMMENDED BY THE ADHESIVE MANUFACTURER AS SHOWN ON MATERIAL DATA SHEETS. FOLLOWING INJECTION, ALL INJECTION PORTS AND CAPPING MATERIAL SHALL BE REMOVED FROM EXPOSED SURFACES LEAVING THE SURFACE SMOOTH AND FLUSH WITH THE SURROUNDING CONCRETE SURFACES.

THE CONTRACTOR SHALL HAVE SUFFICIENT EXPERIENCE AND TRAINING TO PERFORM THE EPOXY INJECTION IN ACCORDANCE WITH THESE PLANS. PRIOR TO PERFORMING ANY WORK, THE CONTRACTOR SHALL SUBMIT TO THE ENGINEER A WRITTEN PROCEDURE FOR PERFORMING THE EPOXY INJECTION. THE PROCEDURE SHALL DESCRIBE IN DETAIL HOW THE WORK WILL BE PERFORMED. THE PROCEDURE SHALL INCLUDE, BUT NOT BE LIMITED TO THE FOLLOWING INFORMATION:

1. DESCRIPTION OF EQUIPMENT
   A. THE INJECTION EQUIPMENT SHALL BE OF THE TYPE THAT MIXES ADHESIVE COMPONENTS AT THE INJECTION HEAD.
   B. THE INJECTION EQUIPMENT SHALL BE CAPABLE OF DISCHARGING MIXED ADHESIVE AT ANY PRESSURE UP TO 300 PSI. THE INJECTION EQUIPMENT SHALL BE EQUIPPED WITH GAUGES WHICH CAN MEASURE THE INJECTION PRESSURE AND VOLUME.
2. EQUIPMENT CALIBRATION PROCEDURES AND SCHEDULE.
3. MATERIALS TO BE USED (INCLUDING MANUFACTURER DATA SHEETS).
   A. CAPPING MATERIAL
   B. EPOXY ADHESIVE (TYPE TO BE APPROPRIATE FOR CRACK SIZES TO BE INJECTED).
4. PORT SPACING
   A. PORT SPACING SHALL NOT BE LESS THAN THE THICKNESS OF THE CONCRETE IN THAT LOCATION.
5. INJECTION SEQUENCE
   A. INJECTION SHALL PROCEED FROM LOWER END OF CRACK ALONG ADJACENT PARTS.
   B. SKIPPING OF PORTS DURING INJECTIONS SHALL NOT BE ALLOWED.

THE CONTRACTOR SHALL HAVE THE MANUFACTURER'S INSTRUCTIONS FOR PROPORTIONING AND MIXING AVAILABLE AT THE JOB SITE AT ALL TIMES AND SHALL ENSURE THAT THE EQUIPMENT IS SUPPLYING THE MIXED ADHESIVE IN THE CORRECT PROPORTIONS.

TO ENSURE PROPER MIXING AND PROPORITONING, SAMPLES SHALL BE TAKEN FROM THE INJECTOR HEAD. SAMPLES SHALL BE TAKEN AT THE START OF EACH WORKDAY AND EACH TIME THE ADHESIVE RESERVOIRS ARE REFILLED. THE SAMPLES SHALL BE IN A TEST CUP. THE SAMPLE SHALL BE MONITORED TO ENSURE THAT THE CURE TIME IS IN COMPLIANCE WITH THE MANUFACTURER'S DATA SHEET. IF THE SAMPLES DO NOT CURE IN THE SPECIFIED TIME THEN THE EQUIPMENT USED TO PRODUCE THE SAMPLE SHALL NOT BE USED UNTIL THE PROBLEM IS CORRECTED.

CORE SAMPLES SHALL BE TAKEN AS VERIFICATION OF THE QUALITY OF WORK. THE CONTRACTOR SHALL TAKE ONE (1) ONE (1) INCH DIAMETER (FULL DEPTH OF CONCRETE AT LOCATION CORED) CORE SAMPLE STARTING WITH THE FIRST REPAIR LOCATION THEN EVERY 3RD REPAIR LOCATION AFTERWARDS. WORK SHALL NOT PROCEED UNTIL THE CORE SAMPLE IS TAKEN AND ACCEPTED. ALL CORE SAMPLES AND HOLES SHALL BE INDEXED FOR FUTURE REFERENCE. THE ENGINEER SHALL DESIGNATE ALL LOCATIONS TO BE CORED. IF ANY CORES SHOW UNACCEPTABLE RESULTS, ALL WORK SHALL BE STOPPED UNTIL THE CONTRACTOR SUBMITS A PROPOSAL FOR CORRECTING UNACCEPTABLE WORK.

THE INITIAL CORE WILL ALSO SERVE TO QUALIFY THE FOREMAN OF THIS WORK. IF AT ANY TIME A NEW FOREMAN IS USED, HE SHALL BE QUALIFIED WITH A CORE SAMPLE.

THE CONTRACTOR, AT HIS EXPENSE, SHALL REPAIR ALL CORE HOLES WITH AN APPROVED CEMENTIIOUS PATCHING MATERIAL.

CORE SAMPLES SHALL BE VISUALLY INSPECTED TO CONFIRM THAT CRACKS ARE COMPLETELY FILLED WITH ADHESIVE. ANY CORE HAVING LESS THAN 95% OF THE CRACK FILLED WITH ADHESIVE SHALL BE CONSIDERED UNACCEPTABLE AND BE REJECTED.

CORE SAMPLES SHALL BE TESTED FOR BOND STRENGTH. SAMPLES MAY BE FRACTURED BY HAMMER BLOW TO CRACK AREA OR THROWN AT A HARD SURFACE. IF ADHESIVE FAILURE OCCURS BEFORE CONCRETE FAILURE, THE CORE SHALL BE CONSIDERED UNACCEPTABLE AND REJECTED.

PAYMENT FOR EPOXY INJECTION CRACK REPAIR SHALL BE MADE UNDER ITEM NO. 604-10.62, EPOXY INJECTION REPAIR (COMPLETE AND IN PLACE), LF AND ITEM NO. 604-10.58, EPOXY INJECTION (INJECTION), GAL.

PLACE BID FOR ITEM NO. 604-10.62, EPOXY INJECITON REPAIR (COMPLETE AND IN PLACE), LF, SHALL INCLUDE COST OF ALL LABOR AND MATERIALS (EXCEPT ADHESIVE) FOR GRINDING AND FOR SURFACE PREPARATION, CRACK PREPARATION, CAPPING, INJECTION OF ADHESIVE, ALL SAMPLING AND TESTING, REMOVAL OF CAPPING MATERIAL AND PORTS, AND OTHER INCIDENTALS. CRACKS SHALL BE MEASURED FOR PAVEMENT ALONG THE LENGTH OF THE VISIBLE SURFACE CRACK.

PRICE BID FOR ITEM NO. 604-10.58, EPOXY INJECTION (INJECTION), GAL, SHALL INCLUDE COST FOR ADHESIVE MATERIAL INJECTED ONLY.

NO PAYMENT SHALL BE MADE FOR REWORK DEEMED NECESSARY BY FAILURE OF ADHESIVE SAMPLES OR CORE SAMPLES.

ALL WORK INCLUDING SAMPLING AND TESTING SHALL BE IN THE PRESENCE OF THE ENGINEER OR HIS REPRESENTATIVE OR CONTRACT INSPECTORS. ANY WORK DONE WITHOUT INSPECTORS PRESENT SHALL NOT BE PAID. THE CONTRACTOR SHALL PROVIDE THE ENGINEER WITH WEEKLY SCHEDULES OF WORK TO BE PERFORMED. SCHEDULES SHALL BE SUBMITTED AT LEAST THREE (3) DAYS IN ADVANCE OF WORK TO BE DONE. THE ENGINEER SHALL BE NOTIFIED OF ANY CHANGE IN THE SCHEDULE A MINIMUM OF TWENTY-FOUR (24) HOURS IN ADVANCE OF CHANGE.

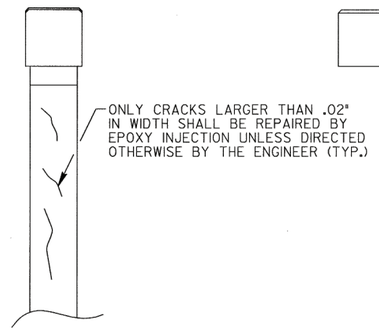

TYPICAL SIDE VIEW

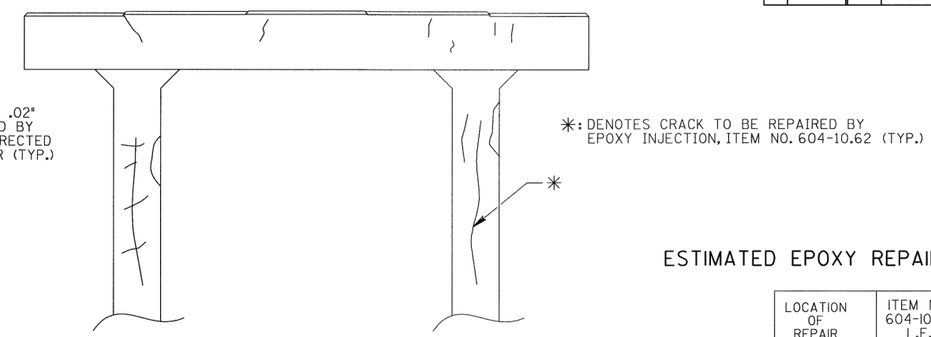

TYPICAL BENT ELEVATION

SHOWING TYPICAL EPOXY REPAIR AREAS ON BENT NOS. 1, 2 & 3

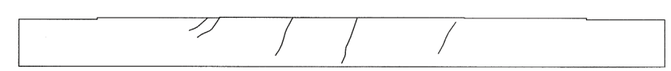

TYPICAL ABUTMENT ELEVATION

SHOWING TYPICAL EPOXY REPAIR AREAS AT ABUTMENT NO. 1 (ABUTMENT NO. 2 SIMILAR)

ESTIMATED EPOXY REPAIR QUANTITIES

LOCATION OF REPAIR	ITEM NO. 604-10.62 L.F.
ABUT. NO. 1	53
BENT NO. 1	65
BENT NO. 2	53
BENT NO. 3	71
ABUT. NO. 2	26
TOTAL	268

UNOFFICIAL SET

NOT FOR BIDDING

STATE OF TENNESSEE
DEPARTMENT OF TRANSPORTATION
BUREAU OF HIGHWAYS

EPOXY INJECTION REPAIRS
STATE ROUTE 56
OVER
INTERSTATE 40
BRIDGE NO.71-SR056-00.54
PUTNAM COUNTY
2014

DESIGNED BY	WAP	DATE	01-14
DRAWN BY	MLP	DATE	01-14
SUPERVISED BY	WAP	DATE	01-14
CHECKED BY	WAP	DATE	01-14

BR-116-138