Index Of Sheets
SEE SHEET IA

# STATE OF TENNESSEE
# DEPARTMENT OF TRANSPORTATION
# BUREAU OF ENGINEERING

| TENN. | YEAR | SHEET NO. |
|---|---|---|
| | 2014 | 1 |
| FED. AID PROJ. NO. | | |
| STATE PROJ. NO. | 83005-4246-04 | |

# SUMNER COUNTY

**SR-25 OVER LIBERTY CREEK**

## BRIDGE REPAIR

STATE HIGHWAY NO. 25 F.A.H.S. NO.

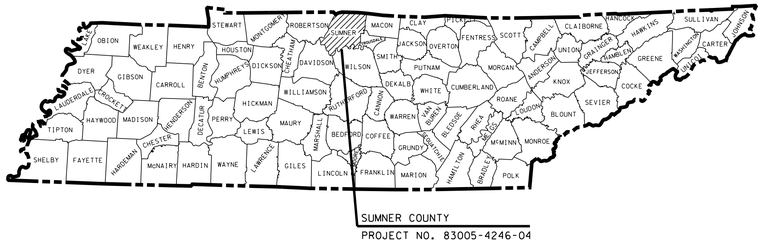


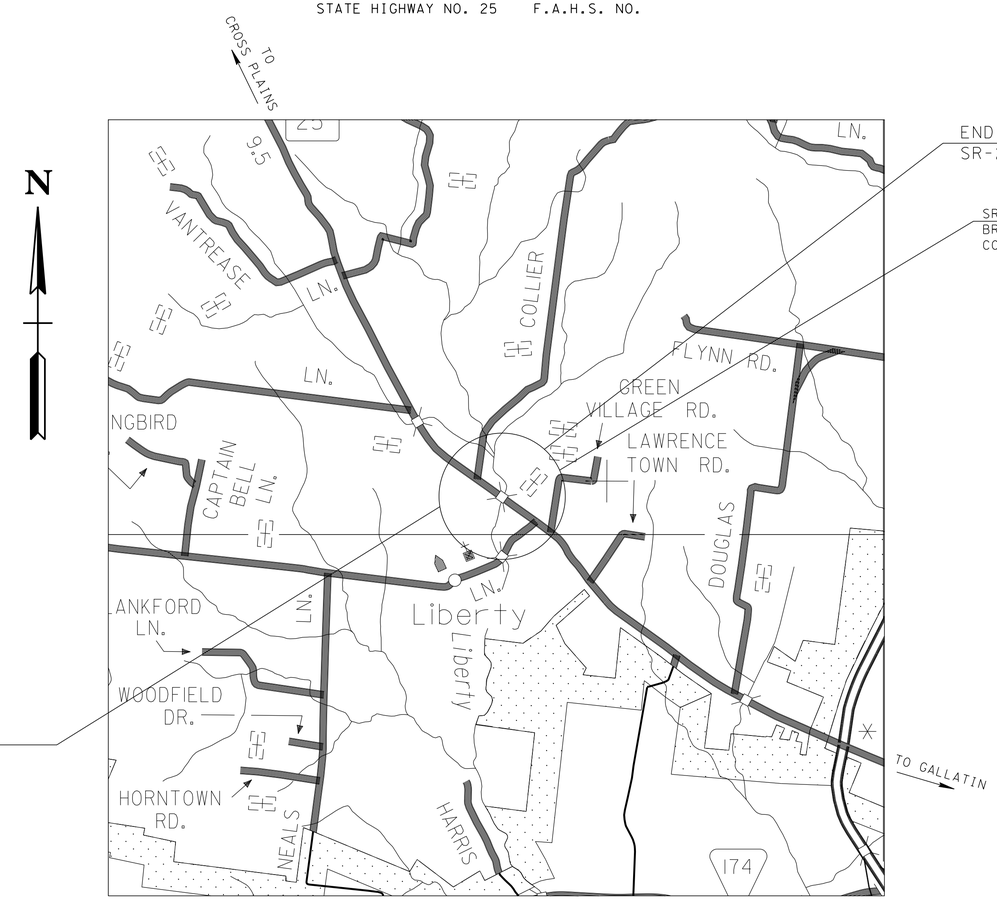


END CONST. PROJECT NO. 83005-4246-04
SR-25 STA. 12+14.50

SR-25 OVER LIBERTY CREEK
BRIDGE NO. 83-SR25-10.89
CONST. PROJECT NO. 83005-4246-04

BEGIN CONST. PROJECT NO. 83005-4246-04
SR-25 STA. 8+50.00

SCALE: 1"= 2000'

| |
|---|
| NO EXCLUSIONS |
| NO EQUATIONS |

UNOFFICIAL SET

NOT FOR BIDDING

STATE OF TENNESSEE
COMMISSIONER OF COMMERCE
NO. 029751

APPROVED: Paul D. Degges
PAUL D. DEGGES, CHIEF ENGINEER

DATE:

APPROVED:
JOHN SCHROER, COMMISSIONER

## SPECIAL NOTES

PROPOSALS MAY BE REJECTED BY THE COMMISSIONER IF ANY OF THE UNIT PRICES CONTAINED THEREIN ARE OBVIOUSLY UNBALANCED, EITHER EXCESSIVE OR BELOW THE REASONABLE COST ANALYSIS VALUE.

THIS PROJECT TO BE CONSTRUCTED UNDER THE STANDARD SPECIFICATIONS OF THE TENNESSEE DEPARTMENT OF TRANSPORTATION DATED MARCH 1, 2006 AND ADDITIONAL SPECIFICATIONS AND SPECIAL PROVISIONS CONTAINED IN THE PLANS AND IN THE PROPOSAL CONTRACT.

TDOT DESIGN MANAGER 1 TERRY MACKIE
DESIGNED BY GRESHAM, SMITH AND PARTNERS
DESIGNER TED KNIAZEWYCZ, P.E. CHECKED BY LARRY RIDLEN, P.E.
P.E. NO. 83005-4246-04
PIN NO. 120026.00

| | |
|---|---|
| ROADWAY LENGTH | 0.057 MILES |
| BRIDGE LENGTH | 0.012 MILES |
| PROJECT LENGTH | 0.069 MILES |

| TRAFFIC DATA | |
|---|---|
| ADT (2014) | 3650 |
| V | 50 MPH |

U.S. DEPARTMENT OF TRANSPORTATION
FEDERAL HIGHWAY ADMINISTRATION

APPROVED:

DIVISION ADMINISTRATOR DATE

8/5/2014 1:58:37 PM
P:\2807181\1\SUSR2500.sht

TENNESSEE D.O.T.
DESIGN DIVISION
FILE NO.

| TYPE | YEAR | PROJECT NO. | SHEET NO. |
|---|---|---|---|
| MAINT. | 2014 | 83005-4246-04 | 1A |
| | | | |
| | | | |
| | | | |

# INDEX OF SHEETS (CONSTRUCTION)

| SHEET | DESCRIPTION |
|---|---|
| 1 | TITLE SHEET |
| 1A | INDEX AND STANDARD DRAWINGS |
| 1B | PROJECT COMMITMENTS |
| 2 | ESTIMATED BRIDGE QUANTITIES |
| 2A-2B | BRIDGE GENERAL NOTES |
| 2C | ESTIMATED ROADWAY QUANTITIES AND TABULATED QUANTITIES |
| 2D | TYPICAL SECTION AND PAVING SCHEDULE |
| 2E-2F | ROADWAY GENERAL NOTES |
| 3 | PRESENT AND PROPOSED LAYOUT |
| 4-4A | TRAFFIC CONTROL PLAN |
| 5 | EXISTING UTILITIES |
| 6 | EROSION PREVENTION AND SEDIMENT CONTROL (EPSC) NOTES |
| 6A | EROSION PREVENTION AND SEDIMENT CONTROL (EPSC) PLAN |

# REFERENCE BRIDGE DRAWINGS

| SHEET | DESCRIPTION |
|---|---|

AN "AS-BUILT" SKETCH MAY BE AVAILABLE FROM TDOT BRIDGE INSPECTION OFFICE

# INDEX OF SHEETS (BRIDGE)

| SHEET | DESCRIPTION |
|---|---|
| BR-117-142 | ESTIMATED BRIDGE QUANTITIES |
| BR-117-143 | BRIDGE GENERAL NOTES SHEET 1 OF 2 |
| BR-117-144 | BRIDGE GENERAL NOTES SHEET 2 OF 2 |
| BR-117-145 | LAYOUT OF BRIDGE TO BE REPAIRED - ALT "A" |
| BR-117-146 | SUPERSTRUCTURE |
| BR-117-147 | SUPERSTRUCTURE DETAILS |
| BR-117-148 | SUPERSTRUCTURE DETAILS |
| BR-117-149 | SUPERSTRUCTURE DETAILS |
| BR-117-150 | PRECAST PAVEMENT AT BRIDGE ENDS - 1 OF 3 |
| BR-117-151 | PRECAST PAVEMENT AT BRIDGE ENDS - 2 OF 3 |
| BR-117-152 | PRECAST PAVEMENT AT BRIDGE ENDS - 3 OF 3 |
| BR-117-153 | ABUTMENT NO. 1 |
| BR-117-154 | ABUTMENT NO. 2 |
| BR-117-155 | EXISTING BENT DETAILS |
| BR-117-155A | BILL OF STEEL |
| BR-117-156 | LAYOUT OF BRIDGE TO BE REPAIRED - ALT "B" |
| BR-117-157 | SUPERSTRUCTURE |
| BR-117-158 | SUPERSTRUCTURE DETAILS |
| BR-117-159 | SUPERSTRUCTURE DETAILS |
| BR-117-160 | SUPERSTRUCTURE DETAILS |
| BR-117-161 | PRESTRESSED BOX BEAM DETAILS |
| BR-117-162 | PRECAST PAVEMENT AT BRIDGE ENDS - 1 OF 3 |
| BR-117-163 | PRECAST PAVEMENT AT BRIDGE ENDS - 2 OF 3 |
| BR-117-164 | PRECAST PAVEMENT AT BRIDGE ENDS - 3 OF 3 |
| BR-117-165 | ABUTMENT NO. 1 |
| BR-117-166 | ABUTMENT NO. 2 |
| BR-117-167 | EXISTING BENT DETAILS |
| BR-117-167A | BILL OF STEEL |

# STANDARD ROADWAY DRAWINGS

| DWG. NO. | REV. | DESCRIPTION |
|---|---|---|
| **ROADWAY DESIGN STANDARDS** | | |
| RD-A-1 | 12-18-99 | STANDARD ABBREVIATIONS |
| RD-L-1 | 10-26-94 | STANDARD LEGEND |
| RD-L-2 | 9-05-01 | STANDARD LEGEND FOR UTILITY INSTALLATIONS |
| RD-L-5 | 5-01-08 | STANDARD LEGEND FOR EROSION PREVENTION AND SEDIMENT CONTROL |
| RD-L-6 | 3-30-10 | STANDARD LEGEND FOR EROSION PREVENTION AND SEDIMENT CONTROL |
| RD-L-7 | 5-24-12 | STANDARD LEGEND FOR EROSION PREVENTION AND SEDIMENT CONTROL |
| RD01-S-11 | 4-04-03 | DESIGN AND CONSTRUCTION DETAILS FOR ROADSIDE SLOPE DEVELOPMENT |
| **EROSION PREVENTION AND SEDIMENT CONTROL** | | |
| EC-STR-2 | 08-01-12 | SEDIMENT FILTER BAGS |
| EC-STR-3C | 08-01-12 | SILT FENCE WITH WIRE BACKING |
| EC-STR-3E | 04-01-08 | SILT FENCE FABRIC JOINING DETAILS |
| EC-STR-25 | 08-01-12 | TEMPORARY CULVERT CROSSING, CONSTRUCTION EXIT, CONSTRUCTION FORD |
| EC-STR-30 | | INSTREAM DIVERSION (WITHOUT TRAFFIC) |
| EC-STR-30A | | INSTREAM DIVERSION (WITH TRAFFIC) |
| **TRAFFIC CONTROL APPURTENANCES** | | |
| T-FAB-1 | 5-27-97 | FLASHING YELLOW ARROW BOARD |
| T-M-1 | 11-01-11 | DETAILS OF PAVEMENT MARKINGS FOR CONVENTIONAL ROADS AND MARKING ABBREVIATIONS |
| T-M-2 | 1-15-13 | DETAILS OF PAVEMENT MARKINGS FOR CONVENTIONAL ROADS |
| T-M-3 | 9-19-91 | MARKINGS STANDARDS FOR TRAFFIC ISLANDS, MEDIANS, PAVED SHOULDERS ON CONVENTIONAL ROADS |
| T-PBR-1 | 6-30-09 | INTERCONNECTED PORTABLE BARRIER RAIL |
| T-S-6 | 2-12-91 | STANDARD MOUNTING DETAILS - BOLTED EXTRUDED PANELS |
| T-S-7 | 2-12-91 | HIGHWAY SHIELDS USED ON INTERSTATE AND U.S. NUMBERED ROUTES |
| T-S-8 | 7-15-91 | HIGHWAY SHIELDS USED ON STATE NUMBERED ROUTES AND ARROWS |
| T-S-9 | 11-01-11 | STANDARD LAYOUT GROUND MOUNTED SIGNS |
| T-S-10 | 04-04-12 | STANDARD MOUNTING DETAILS FLAT SHEET SIGNS ALUMINUM-STEEL DESIGN |
| T-S-16 | 11-01-11 | GROUND MOUNTED ROADSIDE SIGN AND DETAILS |
| T-S-16A | 11-01-11 | GROUND MOUNTED ROADSIDE SIGN PLACEMENT DETAILS |
| T-S-17 | 7-19-13 | STANDARD GROUND MOUNTED SIGN USING PERFORATED/KNOCKOUT SQUARE TUBE |
| T-S-19 | 07-19-13 | STANDARD STEEL SIGN SUPPORTS |
| T-S-20 | 11-01-11 | SIGN DETAILS |
| T-WZ-10 | 4-02-12 | ADVANCE ROAD WORK SIGNING ON HIGHWAYS AND FREEWAYS |
| **SAFETY APPURTENANCES** | | |
| S-GR31-1 | | W-BEAM GUARDRAIL |
| S-GRS-2 | | SPECIAL CASE: GUARDRAIL ATTACHMENT TO CONCRETE DECKS |
| S-GRC-1 | | GUARDRAIL CONNECTION TO BRIDGE ENDS OR BARRIER WALL |
| S-GRT-2 | | TYPE 38 GUARDRAIL TERMINAL |
| S-GRT-2P | | EARTH PAD FOR TYPE 38 TERMINAL |
| S-GRT-2R | | EARTH PAD FOR TYPE 38 (RETROFIT) |
| S-GRA-3 | | GUARDRAIL ANCHOR FOR TYPE 21, 13, AND IN-LINE TERMINALS |

# STANDARD BRIDGE DRAWINGS

| DWG. NO. | REV. | DESCRIPTION |
|---|---|---|
| STD-1-1SS | 5-01-14 | BRIDGE RAILING SINGLE SLOPE CONCRETE PARAPET |
| STD-1-2 | 3-28-08 | SLIDER PLATES AND DECK DRAINS |
| STD-9-1 | 10-07-08 | REINFORCING BAR SUPPORT DETAILS FOR CONCRETE SLABS |
| STD-14-3 | 10-15-08 | STANDARD DETAILS FOR PRESTRESSED BOX BEAMS |
| STD-1-5 | 3-26-14 | PAVEMENT AT BRIDGE ENDS |

UNOFFICIAL SET

NOT FOR BIDDING

STATE OF TENNESSEE
DEPARTMENT OF TRANSPORTATION

INDEX AND STANDARD DRAWINGS

8/5/2014 1:58:38 PM
P:\280718\1\SUSR2500la.sht

| TYPE | YEAR | PROJECT NO. | SHEET NO. |
|---|---|---|---|
| MAINT. | 2014 | 83005-4246-04 | 1B |
| | | | |
| | | | |
| | | | |

# PROJECT COMMITMENTS

| COMMITMENT ID | SOURCE DIVISON | DESCRIPTION | STA. / LOCATION |
|---|---|---|---|
| EDHZ001 | ENVIRONMENTAL DIVISION HAZARDOUS MATERIALS | To minimize the risk to construction workers, TDOT is committed to the removal of Asbestos-Containing Materials (ACM) from bridges that are being demolished, rehabilitated or repaired. Bridge No. 83SR0250013, SR-25 over Liberty Branch, LM 10.89 (83-SR25-10.88) has ACM in the utility pipe that is connected to the bridge. If this material is disturbed during repair activities, abatement should be accomplished per SP202ACM Special Provision Regarding Removal of Asbestos-Containing Materials. ACM abatement should be completed prior to any demolition activities. State of Tennessee asbestos accreditation requirements (TCA 1200-01-20) mandate that ACM abatement work be performed by an accredited firm (contractor) using accredited abatement workers and supervisors. The contractor shall be responsible for submitting a notice to the TDEC, Division of Air Pollution Control ten (10) days in advance of any ACM abatement or demolition. | GRAY COATING ON PIPE INSULATION JOINTS |
| | | | |
| | | | |
| | | | |
| | | | |
| | | | |
| | | | |

UNOFFICIAL SET

NOT FOR BIDDING

BY

STATE OF TENNESSEE
DEPARTMENT OF TRANSPORTATION

PROJECT COMMITTMENTS

8/5/2014 1:58:38 PM
P:\2807118\t\SUSR2500lb.sht

| CONST. NO. | | |
|---|---|---|
| PROJECT NO. | YEAR | SHEET NO. |
| 83005-4246-04 | 2014 | 2 |

REVISIONS

| NO. | DATE | BY | BRIEF DESCRIPTION |
|---|---|---|---|
| | | | |

## ESTIMATED BRIDGE QUANTITIES

| | ITEM NO. | DESCRIPTION | UNIT | BRIDGE 1 SR-25 OVER LIBERTY CREEK BR. NO 80-SR25-10.89 BRIDGE QUANTITIES | SUPERSTRUCTURE | ABUT. NO. 1 | ABUT. NO. 2 |
|---|---|---|---|---|---|---|---|
| (1) | 202-04.01 | REMOVAL OF STRUCTURES (PARTIAL, BR. NO. 80-SR25-10.89) | LS | 1 | | | |
| (2) | 204-04.10 | STRUCTURE EXCAVATION UNCLASSIFIED | C.Y. | 70 | | 35 | 35 |
| (3) | 303-01.02 | GRANULAR BACKFILL (BRIDGES) | TON | 54 | | 27 | 27 |
| (4) | 602-10.05 | BRACING REPAIRS | LS | 1 | | | |
| (5) | 604-03.04 | PAVEMENT @ BRIDGE ENDS | S.Y. | 120 | | | |
| (6) | 604-04.02 | APPLIED TEXTURE FINISH (EXISTING STRUCTURES) | S.Y. | 340 | 210 | 65 | 65 |
| | 604-10.14 | REMOVE EXISTING WEARING SURFACE | LS | 1 | | | |
| (7) | 617-01 | BRIDGE DECK SEALANT | S.Y. | 435 | | | |
| | 620-05.01 | CONC PARAPET SINGLE SLOPE (STD-1-1SS) | L.F. | 129 | | | |
| (8) | 710-09.01 | 6" PERFORATED PIPE WITH VERTICAL DRAIN SYSTEM | L.F. | 80 | | 40 | 40 |
| | 710-09.02 | 6" PIPE UNDERDRAIN | L.F. | 60 | | 30 | 30 |
| | | | | | | | |
| ALT. NO. 1 (10) | 602-10.01 | STRUCTURAL STEEL REPAIRS | LS | 1 | | | |
| ALT. NO. 1 (11) | 604-03.09 | CLASS D CONCRETE (BRIDGE DECK) | C.Y. | 65 | 65 | | |
| ALT. NO. 1 (12) | 604-10.18 | REINFORCING STEEL (REPAIRS) | LB. | 25582 | 25582 | | |
| ALT. NO. 1 (13) | 615-04.10 | NON-SHRINK GROUT | C.F. | 56 | | | |
| | | | | | | | |
| | | | | | | | |
| ALT. NO. 2 (14) | 615-02.04 | PRESTRESSED CONCRETE BOX BEAM (27" X 36") | L.F. | 253 | | | |
| ALT. NO. 2 (15) | 615-04.01 | FULL DEPTH PRCST/PRSTRSSD TYPE I DECK PANELS | S.Y. | 232 | | | |
| ALT. NO. 2 (16) | 615-04.30 | PRECAST BRIDGE ABUTMENT WALL | CY | 14 | | 7 | 7 |
| ALT. NO. 2 (13) | 615-04.10 | NON-SHRINK GROUT | C.F. | 134 | | | |
| | | | | | | | |

## FOOTNOTES:

(1) ITEM INCLUDES REMOVAL OF EXISTING BRIDGE SUPERSTRUCTURE, BENT TO ONE FOOT BELOW EXISTING GROUND LINE. PARTIAL REMOVAL OF ABUTMENT AND WINGWALLS, AND OTHER REMOVAL AREAS DESIGNATED IN THE PLANS. ITEM TO ALSO INCLUDE THE REMOVAL AND REINSTALLATION OF THE PIPE HANGER SUPPORT SYSTEM FOR THE EXISTING GAS LINE. CONTRACTOR TO COORDINATE THIS WORK WITH THE GAS UTILITY COMPANY.

(2) EXCAVATION BASED ON EXISTING GROUND LINE.

(3) NOTE: GRANULAR BACKFILL SHALL BE CLASS "A" GRADING "D" MATERIAL. SEE STANDARD DRAWING STD-10-1.

(4) BRACING MAY BE REQUIRED TO SUPPORT PORTIONS OF THE SUPERSTRUCTURE AND SUBSTRUCTURE DURING REPAIR PROJECT. BRACING ALSO INCLUDES ALL FORMWORK REQUIRED SO THAT NO DEBRIS IS ALLOWED TO FALL INTO THE STREAM.

(5) PAVEMENT AT BRIDGE ENDS SHALL BE PRECAST AND REINFORCED AS SHOWN IN THE PLANS. CLOSURE POUR JOINT MATERIAL SHALL BE MAGNESIUM PHOSPHATE PATCHING MORTAR SIMILAR TO SYSTEM USED ON SUPERSTRUCTURE UNITS. QUANTITIES BASED ON CONCRETE SURFACE AREAS AND DIMENSIONS SHOWN ON DRAWINGS.

(6) FOR NOTES AND LIMITS OF TEXTURE COATING, SEE DETAIL THIS SHEET.

(7) INCLUDES QUANTITY FOR SEALANT ON PAVEMENT AT BRIDGE END SLABS AND ADDITIONAL QUANTITY OVER JOINTS AS REQUIRED IN DETAILS SHOWN IN THE PLANS. SEALANT SHALL BE A TYPE THAT REQUIRES 100% TACK COAT COVERAGE PRIOR TO APPLYING MEMBRANE.

(8) COST OF POLYETHYLENE SHEETING AND OTHER MATERIALS NEEDED FOR INSTALLATION SHALL BE INCLUDED IN ITEMS BID ON.

(9) COST OF CORRUGATED METAL DUCTS, DRILLING AND EPOXY GROUTING BARS AND DOWEL RODS FOR PAVEMENT AT BRIDGE ENDS AND SUPERSTRUCTURE UNITS AND OTHER INCIDENTAL ITEMS SHALL BE INCLUDED IN OTHER ITEMS BID ON.

**ALTERNATE NO. 1 FOOTNOTES:**

(10) NOTE: LUMP SUM: TOTAL ESTIMATED WEIGHT OF 55,200 LBS. OF STRUCTURAL STEEL INCLUDES BEAMS, DIAPHRAGMS, BOLTS, STUDS, PLATES AND OTHER MISCELLANEOUS ITEMS. ALSO SEE TENNESSEE STANDARD SPECIFICATIONS SECTIONS 602.49 AND 602.50. STRUCTURAL STEEL PLATES AND SHAPES SHALL BE ASTM A588 AND BOLTS SHALL ALSO BE WEATHERING STEEL. SEE DRAWING NO. BR-117-143 AND BR-117-144 FOR ADDITIONAL NOTES AND DETAILS. PORTIONS OF STRUCTURAL STEEL TO BE ENCASED IN CONCRETE SHALL BE PRIMED AND PAINTED AS NOTED IN THE PLANS. COST TO INSTALL SUPERSTRUCTURE UNITS COMPLETE AND IN-PLACE SHALL BE INCLUDED IN LUMP SUM UNIT PRICE.

(11) CLASS "D" CONCRETE IS TO BE USED FOR FOR ALL SUPERSTRUCTURE UNIT CONCRETE. CLOSURE POUR MATERIAL SHALL BE MAGNESIUM PHOSPHATE PATCHING MORTAR.

(12) MECHANICAL BAR SPLICERS: MUST BE ON THE APPROVED LIST MAINTAINED BY THE DIVISION OF MATERIALS AND TESTS. THE BAR SPLICER SHALL MEET AASHTO STANDARD SPECIFICATIONS FOR MECHANICAL CONNECTION. WHEN EPOXY COATING IS REQUIRED, THE EXPOSED THREADS SHALL BE REPAIRED AFTER SPLICING ACCORDING TO THE STANDARD SPECIFICATIONS, SECTION 907. THE COST OF FURNISHING THE BAR SPLICERS, EPOXY COATING INCLUDING ALL LABOR AND MATERIALS NECESSARY FOR COMPLETE INSTALLATION, SHALL BE INCLUDED IN THE UNIT PRICE BID FOR ITEM NO. 604-10.18, LBS.

(13) ITEM TO BE USED IN JOINT BETWEEN SUPERSTRUCTURE UNITS. FOR MATERIAL SPECIFICATIONS, SEE DRAWING BR-117-144

**ALTERNATE NO. 2 FOOTNOTES:**

(13) ITEM TO BE USED IN JOINTS BETWEEN FULL DEPTH DECK PANELS, IN PANEL BLOCK-OUTS, AND IN CHANNELS OVER BEAMS. FOR MATERIAL SPECIFICATIONS, SEE BR-117-144.

(14) COST OF ELASTOMERIC PADS AND RUBBER BONDING CEMENT TO BE INCLUDED IN THE UNIT PRICE BID FOR ITEM NO. 615-02.04

(15) INCLUDES ALL COSTS FOR SUPPLYING AND INSTALLING FULL DEPTH PRECAST PRESTRESSED CONCRETE DECK PANELS INCLUDING CONCRETE, STEEL BAR REINFORCING, PRESTRESSING STRANDS, SPLICE BARS, BACKER RODS, BITUMINOUS FIBERBOARD, HAUNCH FORMS, SPACERS, SHIMS & ADHESIVE AND LIFTING HARDWARE. QUANTITIES BASED ON PANEL CONCRETE SURFACE AREAS AND DIMENSIONS SHOWN IN DECK PANEL DRAWINGS.

(16) INCLUDES ALL COSTS FOR SUPPLYING AND INSTALLING PRECAST ABUTMENT WALL ELEMENTS INCLUDING CLASS "A" CONCRETE, STEEL BAR REINFORCING, BACKER RODS, BITUMINOUS FIBERBOARD, FORMS, SPACERS, SHIMS & ADHESIVE AND LIFTING HARDWARE. QUANTITIES BASED ON PRECAST DIMENSIONS SHOWN IN THE CONTRACT DRAWINGS.

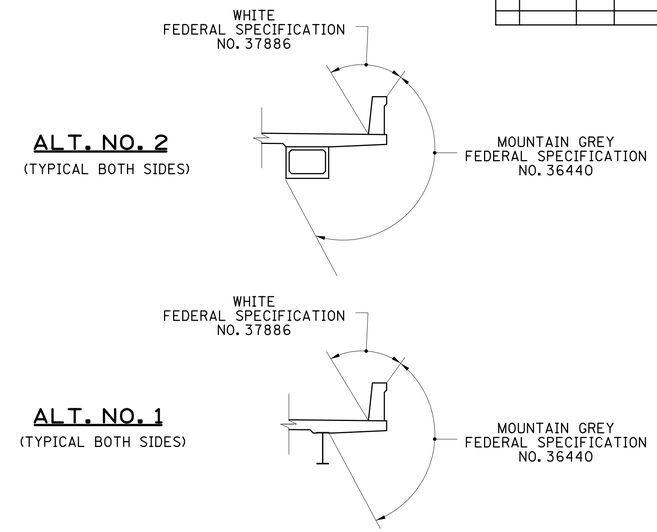


## DETAIL SHOWING LIMITS OF TEXTURE FINISH

NOTE: IN ADDITION TO PORTIONS SHOWN IN THE TEXTURE FINISH SKETCH, THE FOLLOWING EXPOSED CONCRETE IS TO RECEIVE AN APPLIED TEXTURE FINISH: ABUTMENT AND WINGS TO GROUND LINE.

NOTE: COST OF TEXTURE COATING SHALL BE INCLUDED IN ITEM NO. 604-04.02. ALSO INCLUDES EXPOSED SURFACES OF WING WALLS AND ABUTMENTS.

NOTE: BEFORE APPLYING ANY TEXTURE FINISH, ALL SURFACES SHALL BE COMPLETELY CLEANED OF ALL DEBRIS AND FOREIGN MATERIALS.

NOTE: THE CONTRACTOR SHALL USE CONTAINMENT SCREENS OR OTHER MEASURES AS NECESSARY TO PREVENT ANY TEXTURE COATING FROM ENTERING THE ENVIRONMENT. CONTAINMENT MEASURES SHALL BE APPROVED BY THE ENGINEER AND COST SHALL BE INCLUDED IN ITEMS BID NO.

NOTE: CONCRETE FINISHING SHALL BE IN ACCORDANCE WITH SECTION 604.22 OF THE TENNESSEE STANDARD SPECIFICATION. A CLASS I FINISH FOLLOWED BY AN APPLIED TEXTURE FINISH SHALL BE USED IN LIEU OF A CLASS II FINISH. THE COLOR OF THE FINISH SHALL BE SIMILAR TO MOUNTAIN GRAY, FEDERAL SPECIFICATION NO. 36440, FEDERAL COLOR STANDARD NO. 595A, EXCEPT THAT THE INSIDE FACE AND TOP OF THE PARAPET SHALL BE WHITE, FEDERAL SPECIFICATION NO. 37886. A COLOR SAMPLE SHALL BE SUBMITTED TO THE ENGINEER FOR APPROVAL. NO TEXTURE FINISH SHALL BE APPLIED PRIOR TO COMPLETION OF PAVING AND HAUL OPERATIONS AT THE BRIDGE SITE. THE APPLIED TEXTURE FINISH SHALL BE MEASURED AND PAID FOR UNDER ITEM

UNOFFICIAL SET

NOT FOR BIDDING

STATE OF TENNESSEE
DEPARTMENT OF TRANSPORTATION
ESTIMATED BRIDGE QUANTITIES
STATE ROUTE 25
OVER
LIBERTY BRANCH
BR. NO. 83-SR25-10.89
SUMNER COUNTY
2014

PIN NO. 120026.00

| | | | |
|---|---|---|---|
| DESIGNED BY | GRESHAM SMITH & PARTNERS | DATE | 5/2014 |
| DRAWN BY | R. PALMER | DATE | 5/2014 |
| SUPERVISED BY | T. KNIAZEWYCZ | DATE | 5/2014 |
| CHECKED BY | T. KNIAZEWYCZ | DATE | 6/2014 |

GRESHAM SMITH AND PARTNERS

gyoun
P:\2807118\b\8071b18bq.sht
8/5/2014
$PRF$

# GENERAL NOTES

(1) SPECIFICATIONS: STANDARD ROAD AND BRIDGE SPECIFICATIONS OF THE TENNESSEE DEPARTMENT OF TRANSPORTATION. (MARCH 2006 EDITION)

(2) DESIGN SPECIFICATIONS: 6TH EDITION AASHTO 2012 LRFD BRIDGE DESIGN SPECIFICATIONS WITH ADDENDA.

(3) LOADING: HL-93 (DEAD LOADS TO INCLUDE 35 PSF FOR FUTURE OVERLAY)

(4) DEMOLITION: THE CONTRACTOR SHALL TAKE SPECIAL CARE TO PROTECT ANY PARTS OF THE STRUCTURE THAT ARE NOT TO BE REMOVED SPECIFICALLY. THE CONTRACTOR IS NOT ALLOWED TO USE A HYDRAULIC RAM MOUNTED ON A BACKHOE (COMMONLY CALLED A HOE RAM) OR OTHER SIMILARLY HEAVY EQUIPMENT FOR ABUTMENT CONCRETE REMOVAL. PNEUMATIC HAMMERS MAY BE USED TO REMOVE UNSOUND CONCRETE. FOR SUPERSTRUCTURE SLAB AND BEAM REMOVAL, THE MAXIMUM HAMMER SIZE IS 90 POUND CLASS. SAWING OR CUTTING OF THE CONCRETE IS ACCEPTABLE SO LONG AS ANY SPECIFIED PROJECTION OF THE EXISTING REINFORCING STEEL IS MAINTAINED. ALL DEVICES PROPOSED FOR CONCRETE DEMOLITION SHALL MEET THE APPROVAL OF THE ENGINEER.

(5) FORMS AND FALSEWORK: ALL CONCRETE FORM WORK AND FALSEWORK SHALL BE REMOVED AFTER REPAIRS ARE COMPLETED. COST OF FORMS, FALSEWORK, AND THIS WORK SHALL BE COMPLETED BEFORE FINAL PAYMENT IS APPROVED.

(6) FINISHING CONCRETE SURFACES: CONCRETE FINISHING SHALL BE IN ACCORDANCE WITH SECTION 604.22 OF THE TENNESSEE STANDARD SPECIFICATIONS. A CLASS I FINISH FOLLOWED BY AN APPLIED TEXTURE FINISH SHALL BE USED IN LIEU OF A CLASS II FINISH. NO TEXTURE FINISH SHALL BE APPLIED PRIOR TO COMPLETION OF PAVING AND HAULING OPERATIONS AT THE BRIDGE SITE.

(7) QUICK SET PATCHING MATERIAL: QUICK SET PATCHING MATERIAL SHALL BE A POLYMER MODIFIED CEMENTIOUS PATCHING MATERIAL. SEE TDOT QUALIFIED PRODUCTS LIST 13, SECTION B.6, FOR ACCEPTABLE PATCHING MATERIAL.

(8) WELDING: CURRENT ANSI/AASHTO/AWS D1.5 BRIDGE WELDING CODE AND THE STANDARD SPECIFICATIONS. ALL WELDING TO BE COMPLETED BY AWS CERTIFIED WELDERS. SEE SECTION 602 OF THE STANDARD SPECIFICATIONS.

(9) SHOP DRAWINGS: SHALL BE SUBMITTED ACCORDING TO THE STANDARD SPECIFICATIONS. SHOP DRAWINGS SHALL BE SUBMITTED TO THE BRIDGE REPAIR OFFICE OF THE DIVISION OF STRUCTURES.

(10) REINFORCING STEEL: SEE SECTION 604 AND 907 OF THE STANDARD SPECIFICATIONS. REINFORCEMENT SHALL BE ASTM A615 GRADE 60 UNLESS NOTED OTHERWISE.

(11) MECHANICAL BAR SPLICERS: MUST BE ON THE APPROVED LIST MAINTAINED BY THE DIVISION OF MATERIALS AND TESTS. THE BAR SPLICER SHALL MEET AASHTO STANDARD SPECIFICATIONS FOR MECHANICAL CONNECTION. WHEN EPOXY COATING IS REQUIRED, THE EXPOSED THREADS SHALL BE REPAIRED AFTER SPLICING ACCORDING TO SPECIAL PROVISION 907A. THE COST OF FURNISHING THE BAR SPLICERS, (AND EPOXY COATING WHEN REQUIRED) INCLUDING ALL LABOR AND MATERIALS NECESSARY FOR COMPLETE INSTALLATIONS, SHALL BE INCLUDED IN THE UNIT PRICE FOR ITEM 604-10.18 LBS.

(12) ANY DAMAGE TO EXISTING STRUCTURES TO BE LEFT IN PLACE SHALL BE REPAIRED AT THE CONTRACTOR'S EXPENSE.

(13) NOTE: THE CONTRACTOR SHALL PROVIDE 100% CONVENTIONAL FALL PROTECTION FOR WORKERS INSTALLING DECK ABOVE 15 FEET.

(14) THE CONTRACTOR SHALL BE RESPONSIBLE FOR THE STABILITY OF THE STRUCTURE DURING CONSTRUCTION. DESIGN CALCULATIONS AND DETAILS OF TEMPORARY SUPPORT SYSTEM OR FALSEWORK REQUIRED SHALL BE SUBMITTED TO THE ENGINEER FOR REVIEW AND SHALL MEET WITH THE FULL SATISFACTION OF THE ENGINEER BEFORE ANY DEMOLITION IS BEGUN. COST OF STABILIZING THE STRUCTURE SHALL BE INCLUDED IN ITEM NO. 602-10.05, BRACING REPAIRS, L.S.

(15) GROUTED BARS IN DRILLED HOLES: HORIZONTALLY DRILLED HOLES SHALL BE DRILLED 1/2 " IN DIAMETER LARGER THAN THE BAR, CLEANED, PACKED WITH NON-SHRINK GROUT AND THE BAR ROTATED (NOT DRIVEN) INTO ITS SEAT. VERTICALLY DRILLED HOLES SHALL BE DRILLED 1/4 " IN DIAMETER LARGER THAN THE BAR, CLEANED, PACKED WITH EPOXY GROUT AND BAR DRIVEN TO ITS SEAT. ALL GROUTING MATERIALS SHALL BE APPROVED BY TDOT MATERIALS AND TESTS.

(16) NOTE: FOR REPAIR AREAS, THE CONTRACTOR SHALL SAW CUT ONE (1) INCH DEEP INTO THE EXISTING CONCRETE BEFORE REMOVING CONCRETE.

(17) GIRDER AND SLAB FABRICATION: THE CONTRACTOR SHALL CHECK THE LOCATION OF ALL EXISTING SUBSTRUCTURES AND VERIFY SPAN LENGTHS AND GIRDER SPACING BEFORE FABRICATION BEGINS.

## CONCRETE STRENGTH AND CURE TIME NOTES

(18) FOR STRENGTH AND CURE TIMES OF MAGNESIUM PHOSPHATE PATCHING MORTAR SEE NOTES ON SHEET 2B.

(19) HIGH EARLY STRENGTH CONCRETE – TRAFFIC SHALL NOT BE PERMITTED ON ANY REPAIR AREA UNTIL TEST SPECIMENS ATTAIN A COMPRESSIVE STRENGTH OF 3000 P.S.I. AND THE CONCRETE HAS BEEN IN PLACE A MINIMUM OF 18 HOURS. PARAPETS MAY BE CAST PRIOR TO PLACEMENT OF THE SUPERSTRUCTURE UNITS.

(20) NOTE TO CONTRACTOR REGARDING CONCRETE: CONCRETE FOR PARAPETS SHALL BE HIGH EARLY STRENGTH MIX AND MEET THE REQUIREMENTS OF THE STANDARD SPECIFICATIONS, CLASS "A" EXCEPT THE CEMENT CONTENT SHALL BE A MINIMUM OF 714 LBS. THE WATER TO CEMENT RATIO SHALL BE A MAXIMUM OF 0.40. NO FLY ASH REPLACEMENT WILL BE PERMITTED. THE CONTRACTOR SHALL PROVIDE PROOF PRIOR TO BEGINNING WORK THAT THE PROPOSED CONCRETE MIX WILL OBTAIN THE REQUIRED PROPERTIES. PROOF SHALL BE PROVIDED BY AN INDEPENDENT TESTING COMPANY AND SUBMITTED TO THE MATERIALS AND TEST DIVISION OF THE TENNESSEE DEPARTMENT OF TRANSPORTATION FOR APPROVAL.

## UTILITY NOTES

(21) THE LOCATIONS OF UTILITIES SHOWN WITHIN THESE PLANS ARE APPROXIMATE ONLY. EXACT LOCATIONS SHALL BE DETERMINED IN THE FIELD BY CONTACTING THE UTILITY COMPANIES INVOLVED. NOTIFICATION BY CALLING THE TENNESSEE ONE CALL SYSTEM, INC., AT 1-800-351-1111 AS REQUIRED BY TCA 65-31-106 WILL BE REQUIRED.

(22) UNLESS OTHERWISE NOTED, ALL UTILITY ADJUSTMENTS WILL BE PERFORMED BY THE UTILITY OR IT'S REPRESENTATIVE. THE CONTRACTOR AND UTILITY OWNERS WILL BE REQUIRED TO COOPERATE WITH EACH OTHER IN ORDER TO EXPEDITE THE WORK REQUIRED BY THIS CONTRACT. ON CONTRACTS WHERE CONSTRUCTION STAKES, LINES, AND GRADES ARE CONTRACT ITEMS, THE CONTRACTOR WILL BE REQUIRED TO PROVIDE RIGHT-OF-WAY OR SLOPE STAKES, DITCH OR STREAM BED GRADES, OR OTHER ESSENTIAL SURVEY STAKING TO PREVENT CONFLICTS WITH THE HIGHWAY CONSTRUCTION. FREQUENTLY, THIS WILL BE REQUIRED AS THE FIRST ITEM OF WORK AND AT ANY LOCATION ON THE PROJECT DIRECTED BY THE ENGINEER.

## UTILITY NOTES (CONT'D)

(23) THE CONTRACTOR WILL PROVIDE ALL NECESSARY PROTECTIVE MEASURES TO SAFEGUARD EXISTING UTILITIES FROM DAMAGE DURING CONSTRUCTION OF THIS PROJECT. IN THE EVENT THAT SPECIAL EQUIPMENT IS REQUIRED TO WORK OVER AND AROUND

THE UTILITIES, THE CONTRACTOR WILL BE REQUIRED TO FURNISH SUCH EQUIPMENT. THE COST OF PROTECTING UTILITIES FROM DAMAGE AND FURNISHING SPECIAL EQUIPMENT WILL BE INCLUDED IN THE PRICE BID FOR OTHER ITEMS OF CONSTRUCTION.

(24) PRIOR TO SUBMITTING HIS BID, THE CONTRACTOR WILL BE SOLELY RESPONSIBLE FOR CONTACTING OWNERS OF ALL AFFECTED UTILITIES IN ORDER TO DETERMINE THE EXTENT TO WHICH UTILITY RELOCATIONS AND/OR ADJUSTMENTS WILL HAVE UPON THE SCHEDULE OF WORK FOR THE PROJECT. WHILE SOME WORK MAY BE REQUIRED 'AROUND' UTILITY FACILITIES THAT WILL REMAIN IN PLACE, OTHER UTILITY FACILITIES MAY NEED TO BE ADJUSTED CONCURRENTLY WITH THE CONTRACTOR'S OPERATIONS. ADVANCE CLEAR CUTTING MAY BE REQUIRED BY THE ENGINEER AT ANY LOCATION WHERE CLEARING IS CALLED FOR IN THE SPECIFICATIONS AND CLEAR CUTTING IS NECESSARY FOR A UTILITY RELOCATION. ANY ADDITIONAL COST WILL BE INCLUDED IN THE UNIT PRICE BID FOR OTHER ITEMS

(25) THE CONTRACTOR SHALL NOTIFY EACH UTILITY OWNER OF HIS PLAN OF OPERATION IN THE AREA OF THE UTILITIES. PRIOR TO COMMENCING WORK, THE CONTRACTOR SHALL CONTACT THE UTILITY OWNERS AND REQUEST THEM TO PROPERLY LOCATE THEIR RESPECTIVE UTILITY ON THE GROUND. THIS NOTIFICATION SHALL BE GIVEN AT LEAST THREE (3) BUSINESS DAYS PRIOR TO COMMENCEMENT OF OPERATIONS AROUND THE UTILITY IN ACCORDANCE WITH TCA 65-31-106.

## SUPERSTRUCTURE SPECIAL NOTES

(26) SUBMIT ERECTION PLAN INCLUDING, BUT NOT LIMITED TO THE FOLLOWING INFORMATION:
- LOCATION OF THE CRANES AND PICK LOCATIONS.
- CRANE CHARTS.
- SUPERSTRUCTURE UNIT ERECTION AND SEQUENCE.
- DESCRIBE CABLES AND LIFTING EQUIPMENT.

(27) ERECTION PLAN SUBMISSION WILL INCLUDE DETAILS SHOWING THE REMOVAL OF THE EXISTING SUPERSTRUCTURE AND THE ERECTION AND INSTALLATION OF THE PROPOSED SUPERSTRUCTURE IN ACCORDANCE WITH THE DESIGN PLANS.

(28) SUBMIT A METHOD OF FORMING CLOSURE POURS AT JOINTS BETWEEN PRECAST PANELS OR SUPERSTRUCTURE UNITS.

(29) SUBMIT A PROPOSED METHOD FOR INSTALLING THE STRUCTURAL NON-SHRINK GROUT, SEQUENCE, AND EQUIPMENT FOR GROUTING OPERATIONS TO THE ENGINEER FOR REVIEW. OBTAIN APPROVAL PRIOR TO BEGINNING PLACEMENT OF STRUCTURAL NON-SHRINK GROUT,

(30) ALL GROUT, MORTAR AND POLYMER CONCRETE SHALL BE PLACED IN ACCORDANCE WITH THE CONTRACT SPECIFICATIONS. PARTICULAR EMPHASIS SHOULD BE GIVEN TO PROPER VIBRATION OF THE MATERIAL TO AVOID HONEYCOMBS AND VOIDS, ESPECIALLY AT CONSTRUCTION JOINTS. ALL JOINTS MUST BE MORTAR TIGHT. IMMEDIATELY PRIOR TO PLACING THE CLOSURE POUR, ADJACENT SURFACES OF THE DECK SLAB SHALL BE WETTED UNTIL FREE MOISTURE APPEARS AND REMAINS. IF THIS NOTE CONTRADICTS THE MANUFACTURER'S REQUIREMENTS, THE MANUFACTURER'S REQUIREMENTS SHALL TAKE PRECEDENCE.

(31) CLEAN AND REMOVE ALL DEBRIS FROM THE BLOCKOUTS PRIOR TO PLACEMENT OF MAGNESIUM PHOSPHATE MORTAR.

(32) KEEP BONDING SURFACE FREE FROM LAITANCE, DIRT, DUST, PAINT, GREASE, OIL, RUST, OR ANY CONTAMINANT OTHER THAN WATER.

(33) SATURATE SURFACE DRY (SSD) ALL SURFACES RECEIVING STRUCTURAL NON-SHRINK GROUT.

CONST. NO. _____

| PROJECT NO. | YEAR | SHEET NO. |
|---|---|---|
| 83005-4246-04 | 2014 | 2A |

REVISIONS

| NO. | DATE | BY | BRIEF DESCRIPTION |
|---|---|---|---|
| | | | |

UNOFFICIAL SET

NOT FOR BIDDING

STATE OF TENNESSEE

DEPARTMENT OF TRANSPORTATION

BRIDGE GENERAL NOTES
SHEET 1 OF 2
STATE ROUTE 25
OVER
LIBERTY BRANCH
BR. NO. 83-SR25-10.89
SUMNER COUNTY
2014

BR-117- 143

PIN NO. 120026.00

DESIGNED BY GRESHAM SMITH & PARTNERS DATE 5/2014
DRAWN BY R. PALMER DATE 5/2014
SUPERVISED BY T. KNIAZEWYCZ DATE 5/2014
CHECKED BY T. KNIAZEWYCZ DATE 6/2014

GS&P GRESHAM SMITH AND PARTNERS

gyoun
P:\2807118\b\8071b18gnl.sht

8/5/2014
$PRF$

## SUPERSTRUCTURE SPECIAL NOTES (CONT'D)

(34) PROTECTIVE MATTING SHALL BE UTILIZED ON DECK SURFACE ADJACENT TO CLOSURE POURS DURING CLOSURE POUR OPERATIONS. THE INTENT OF THE MATTING IS TO MINIMIZE THE AMOUNT OF GROUT/MORTAR SPLATTER. THE TYPE OF MATTING SHALL BE DETERMINED BY THE CONTRACTOR AND PAID FOR UNDER PRICE BID FOR OTHER ITEMS.

(35) MATERIALS, CONSTRUCTION, AND WORKMANSHIP WILL BE IN ACCORDANCE WITH STANDARD ROAD AND BRIDGE SPECIFICATIONS OF THE TENNESSEE DEPARTMENT OF HIGHWAYS (CURRENT EDITION).

(36) CHAMFER ALL EXPOSED CORNERS ONE (1) INCH, CORNERS ADJACENT TO CLOSURE POURS ARE NOT CONSIDERED EXPOSED CORNERS

(37) MEMBERS THAT SUSTAIN DAMAGE OR SURFACE DEFECTS DURING FABRICATION, HANDLING, STORAGE, HAULING, OR ERECTION ARE SUBJECT TO REVIEW AND REJECTION. SUBMIT PROPOSED WRITTEN REPAIR PROCEDURES AND OBTAIN APPROVAL BEFORE PREFORMING REPAIRS. REPAIR WORK MUST REESTABLISH THE MEMBER'S STRUCTURAL INTEGRITY, DURABILITY, AND AESTHETICS TO SATISFACTION OF THE ENGINEER. WHEN DAMAGE OCCURS, DETERMINE THE CAUSE AND TAKE CORRECTIVE ACTION. FAILURE TO TAKE CORRECTIVE ACTION, LEADING TO SIMILAR REPETITIVE DAMAGE, COULD BE CAUSE FOR REJECTION OF THE DAMAGED MEMBER. CRACKS THAT EXTEND TO THE NEAREST REINFORCEMENT PLANE AND FINE SURFACE CRACKS THAT DO NOT EXTEND TO THE NEAREST REINFORCEMENT PLANE BUT ARE NUMEROUS OR EXTENSIVE ARE SUBJECT TO REVIEW AND REJECTION. FULL DEPTH CRACKING AND BREAKAGE GREATER THAN 1 FOOT ARE CAUSE FOR REJECTION.

(38) CONTRACTOR WILL BE RESPONSIBLE FOR THE HANDLING AND STORAGE OF PANELS IN SUCH A MANNER THAT DOES NOT CAUSE UNDUE STRESS ON THE PANELS. CONTRACTOR WILL SUBMIT A HANDLING AND STORAGE PLAN TO THE ENGINEER FOR REVIEW PRIOR TO THE CONSTRUCTION OF ANY PANEL. ENGINEER WILL INSPECT ALL PANELS AT THE CONTRACTOR'S EXPENSE. PANELS SHOULD BE REJECTED DUE TO BUT NOT LIMITED TO THE FOLLOWING: BROKEN CORNERS, FULL DEPTH CRACKING, OR SIGNIFICANT DIMENSIONAL DEFORMITIES.

(39) THERE SHALL BE A MINIMUM OF FOUR (4) LIFTING DEVICES PER UNIT OR SECTION OF DECK PANEL

(40) THE DESIGN OF THE LIFTING DEVICES AND PANEL SUPPORTS WILL BE THE RESPONSIBILITY OF THE CONTRACTOR. CONTRACTOR WILL SUBMIT PLANS AND HANDLING STRESS CALCULATIONS TO THE ENGINEER FOR APPROVAL PRIOR TO PANEL CONSTRUCTION.

(41) SUBMIT SHOP DRAWING IN ACCORDANCE WITH TDOT SECTION 918.29 AND 105.02. IN ADDITION, SHOW
- ALL LIFTING HARDWARE OR DEVICES AND LOCATION ON THE SHOP DRAWINGS;
- SHOW TYPE AND AMOUNT OF ANY ADDITIONAL REINFORCING REQUIRED;
- SHOW HANDLING STRESSES DURING FABRICATION, SHIPPING, AND ERECTION.

## GROUT AND MORTAR SPECIAL NOTES

(42) USE QUICK-SETTING, RAPID STRENGTH GAIN MAGNESIUM PHOSPHATE PATCHING MORTAR (MPPM).

(43) MAGNESIUM PHOSPHATE PATCHING MORTAR: F'c = 6,000 PSI (MIN.) (LEAN); 3,000 PSI (MIN.) (EXTENDED) IN < 8 HOURS.

(44) MAGNESIUM PHOSPHATE PATCHING MORTAR (MPPM) SHALL BE EUCO-SPEED MP MANUFACTURED BY EUCLID CHEMICAL COMPANY OR SET 45 HW MANUFACTURED BY BASF CORPORATION.

(45) USE GROUT AND MPPM SHALL BE GRAY IN COLOR AND CONTAIN A CORROSION INHIBITOR. NO CALCIUM CHLORIDE OR ADMIXTURE CONTAINING CALCIUM CHLORIDE OR OTHER INGREDIENT IN SUFFICIENT QUANTITY TO CAUSE CORROSION TO STEEL REINFORCEMENT WILL BE ALLOWED.

(46) THE CONCRETE CORROSION INHIBITOR ADMIXTURE WILL CONTAIN A MINIMUM OF 30% CALCIUM NITRITE BY MASS AND FORMULATED TO MEET ASTM C494 REQUIREMENTS FOR TYPE C, ACCELERATING ADMIXTURE. USE A DOSAGE RATE OF FOUR (4) GALLONS PER CUBIC YARD UNLESS OTHERWISE DIRECTED BY THE MANUFACTURER. USE THE ADMIXTURE IN ALL NEW CONCRETE AND GROUT PLACED.

(47) MIX, PLACE AND CURE MAGNESIUM PHOSPHATE PATCHING MORTAR JUST PRIOR TO USE IN ACCORDANCE WITH THE MANUFACTURER'S INSTRUCTIONS.

(48) CONTACT THE MANUFACTURER'S REPRESENTATIVE FOR ADVICE ON HOW TO REDUCE HEAT SUCH AS WET CURING OR ADDING RETARDING ADMIXTURE IF THE HEAT OF HYDRATION IS EXCESSIVE.

(49) FINISH GROUT FLUSH WITH ADJACENT BRIDGE ELEMENTS.

(50) REPAIR AT THE DEPARTMENT'S OPTION ANY BONDING FAILURES THAT OCCUR AT THE CONTRACTOR'S EXPENSE.

(51) REFER TO STRUCTURAL CLOSURE POUR MATERIAL PERFORMANCE CRITERIA TABLE ON THIS SHEET FOR GROUT AND MORTAR REQUIREMENTS.

(52) EXTEND MAGNESIUM PHOSPHATE MORTAR PER MANUFACTURER'S RECOMMENDATIONS.

(53) FOR MORE INFORMATION ON MAGNESIUM PHOSPHATE MORTAR, SEE NCHRP REPORT NO. 173.

## ALTERNATE "A" SPECIAL NOTES

(54) DECK AND PAVEMENT AT BRIDGE END CONCRETE: F'c = 4,000 PSI.

(55) ALL SUPERSTRUCTURE UNIT REINFORCEMENT TO BE EPOXY COATED: FY = 60,000 PSI.

(56) APPROVAL OF MATERIALS: NO FABRICATION SHALL BE STARTED UNTIL THE MATERIALS INVOLVED HAVE BEEN APPROVED BY THE TENNESSEE DEPARTMENT OF TRANSPORTATION, DIVISION OF MATERIALS AND TESTS.

(57) IDENTITY OF MAIN MATERIALS: SEE SECTION 602 OF THE STANDARD SPECIFICATIONS.

(58) STRUCTURAL STEEL: SHALL CONFORM TO ASTM A709 GRADE 50W UNLESS OTHERWISE NOTED. ALL STRUCTURAL STEEL FOR GIRDERS SHALL MEET THE SUPPLEMENTAL REQUIREMENTS FOR LONGITUDINAL CHARPY V-NOTCH TEST SPECIFIED IN THE ASTM SPECIFICATIONS. ZONE 2 OF NON-FRACTURE CRITICAL CRITERIA SHALL APPLY.

(59) FIELD CONNECTIONS: SHALL BE 7/8 INCH DIAMETER HIGH TENSILE STRENGTH BOLTS ASTM-A325 UNLESS OTHERWISE SHOWN. SEE AASHTO SPECIFICATIONS ART. 11.3.2 DIVISION II AND SECTION 602 OF THE STANDARD SPECIFICATIONS.

(60) PAINTING OF STEEL: STRUCTURAL STEEL WITHIN SPECIFIED LIMITS (ALL STRUCTURAL STEEL WITHIN AND ONE (1) FOOT BEYOND CONCRETE ENCASEMENT AT ABUTMENTS) SHALL BE BLAST CLEANED AND PAINTED. BLAST CLEANING SHALL BE IN ACCORDANCE WITH TENNESSEE STANDARD SPECIFICATION 603.05 (B). PAINT SHALL BE SYSTEM "A", INORGANIC ZINC PAINT SYSTEM, AS STATED IN STANDARD SPECIFICATION 603.06 (A). COLOR OF THE URETHANE FINISH COAT SHALL COMPLY WITH FEDERAL STANDARD NO. 595A, 30059, BROWN. SEE SECTIONS 603 AND 910 OF THE STANDARD ROAD AND BRIDGE SPECIFICATIONS OF THE TENNESSEE DEPARTMENT OF TRANSPORTATION.

(61) LIFTING HARDWARE MAY BE BOLTED TO GIRDERS THROUGH BLOCK-OUTS IN THE SLAB. BLOCK-OUTS SHALL BE FILLED WITH MAGNESIUM PHOSPHATE PATCHING MORTAR.

(62) MEMBERS THAT SUSTAIN DAMAGE OR SURFACE DEFECTS DURING FABRICATION, HANDLING, STORAGE, HAULING, OR ERECTION ARE SUBJECT TO REVIEW AND REJECTION. SUBMIT PROPOSED WRITTEN REPAIR PROCEDURES AND OBTAIN APPROVAL BEFORE PREFORMING REPAIRS. REPAIR WORK MUST REESTABLISH THE MEMBER'S STRUCTURAL INTEGRITY, DURABILITY, AND AESTHETICS TO SATISFACTION OF THE ENGINEER.

(63) THERE SHALL BE A MINIMUM OF 4 LIFTING DEVICES/LOCATIONS PER SUPERSTRUCTURE UNIT.

(64) THE DESIGN OF THE LIFTING DEVICES WILL BE THE RESPONSIBILITY OF THE CONTRACTOR. CONTRACTOR WILL SUBMIT PLANS AND HANDLING STRESS CALCULATIONS TO THE ENGINEER FOR APPROVAL PRIOR TO THE CONSTRUCTION OF THE SUPERSTRUCTURE UNITS.

(65) CONTRACTOR WILL BE RESPONSIBLE FOR THE HANDLING AND STORAGE OF THE SUPERSTRUCTURE UNITS IN SUCH A MANNER THAT DOES NOT CAUSE UNDUE STRESS ON THE SUPERSTRUCTURE UNITS. CONTRACTOR WILL SUBMIT A HANDLING AND STORAGE PLAN TO THE ENGINEER FOR REVIEW PRIOR TO CONSTRUCTION.

(66) ENGINEER WILL INSPECT SUPERSTRUCTURE UNITS AT THE CONTRACTOR'S EXPENSE. SUPERSTRUCTURE UNITS SHOULD BE REJECTED DUE TO BUT NOT LIMITED TO THE FOLLOWING:
- FULL DEPTH CRACKING
- SIGNIFICANT DIMENSIONAL DEFORMITIES.

## ALTERNATE "B' SPECIAL NOTES

(67) PRESTRESSED PANEL CONCRETE: F'c = 5,000 PSI; f'ci = 4,000 PSI.

(68) PAVEMENT AT BRIDGE END CONCRETE: F'c = 4,000 PSI.

(69) PRESTRESSED "LO-LAX" STRANDS – ½ INCH DIA. - Fpu = 270 KSI. SEE STANDARD SPECIFICATIONS SECTION 615.

(70) ALL FULL DEPTH DECK PANELS REINFORCEMENT TO BE EPOXY COATED: FY = 60,000 PSI.

(71) THE TOP, BOTTOM AND SIDE OF THE PANELS THAT WILL BE FINISHED EDGE OF DECK SHALL BE GIVEN A CLASS 1, ORDINARY SURFACE FINISH.

(72) REINFORCEMENT AND STRANDS IN THE PANEL SHALL HAVE A MINIMUM OF ONE (1) INCH CONCRETE COVER ON THE BOTTOM OF THE PANEL.

(73) PRESTRESSING STRANDS SHALL PROJECT 2 INCHES FROM THE END OF THE PANEL OVER BRIDGE CENTERLINE BEAM LINE. DURING PANEL ERECTION, ANY INDIVIDUAL STRAND WHICH CONFLICTS WITH BEAM STIRRUPS MAY BE MECHANICALLY CUT THE MINIMAL AMOUNT SUFFICIENT TO PROVIDE CLEARANCE, ONLY THOSE STRANDS WHICH INTERFERE WITH PANEL PLACEMENT MAY BE CUT.

(74) PERMANENTLY MARK EACH PRECAST UNIT WITH DATE OF CASTING AND SUPPLIER IDENTIFICATION IN THE FRESH CONCRETE.

(75) NO CONSTRUCTION LOADS SHALL BE ALLOWED ON OVERHANGS UNTIL ALL PANEL GROUTING (EPOXY AND MPPM) IS COMPLETE.

(76) PANELS SHALL BE TEMPORARILY SUPPORTED AND THE PROPER DECK PROFILE SHALL BE PROVIDED BY SHIM PLATES.

(77) SHIM PLATES SHALL BE GALVANIZED STEEL, KOROLATH STRIP SHIMS OR APPROVED EQUAL.

(78) EPOXY RESIN ADHESIVE FOR SHIM PLATES WILL CONFORM TO AASHTO M235 STANDARD SPECIFICATIONS FOR EPOXY RESIN ADHESIVES.

(79) PLACE PRECAST CONCRETE DECK PANELS AS SHOWN ON THE PLANS OR APPROVED WORKING DRAWINGS.

(80) MATING SURFACES OF THE PRESTRESSED PANELS SHALL NOT DEVIATE FROM A STRAIGHT LINE BY MORE THAN 1/4 INCH IN 10 FEET. ALL OTHER DIMENSIONS SHALL BE FABRICATED TO +1/4 INCH, -1/8 INCH EXCEPT STRANDS SHALL BE LOCATED TO +1/8 INCH, -1/4 INCH VERTICALLY. PANELS SHALL BE SUPPORTED SO AS TO PRESENT A UNIFORM BOTTOM SURFACE. THE DIAGONAL DIMENSION OF RECTANGULAR PANELS SHALL NOT DIFFER BY MORE THAN 1/2 INCH.

(81) PROFILE GRIND THE DECK AFTER ALL PANELS ARE IN PLACE, GROUTING IS COMPLETE AND DESIGN STRENGTH IS ACHIEVED. ALL LABOR AND MATERIALS FOR GRINDING SHALL BE ACCOUNTED FOR IN UNIT PRICE BID FOR ITEM NO. 615-04.01. GRINDING SHALL OCCUR ONLY WHEN THERE IS 1/8 INCH DIFFERENCE IN ADJACENT PANEL PROFILE OR GROUT BLEMISHES GREATER THAN 1/8 INCH.

(82) APPLY DECK SEALANT AND ASPHALTIC CONCRETE OVERLAY ON BRIDGE DECK AFTER CONCRETE GRINDING IS COMPLETE.

CONST. NO. _____

| PROJECT NO. | YEAR | SHEET NO. |
|---|---|---|
| 83005-4246-04 | 2014 | 2B |

REVISIONS

| NO. | DATE | BY | BRIEF DESCRIPTION |
|---|---|---|---|
| 1 | 9/27/13 | TAK | ADDED SHEET NUMBER. |

### MAGNESIUM PHOSPHATE MATERIAL PERFORMANCE CRITERIA TABLE

| PERFORMANCE CHARACTERISTIC | TEST METHOD | PERFORMANCE CRITERIA | | |
|---|---|---|---|---|
| COMPRESSIVE STRENGTH (CS) KSI | ASTM C39 (MODIFIED) | 3.0 ≤ CS (EXTENDED) @ 8 HOURS (OVERNIGHT CURE)<br>6.0 ≤ CS (LEAN) @ 7 DAYS (7 DAY CURE) | | |
| SHRINKAGE (S) (CRACK AGE, DAYS) | AASHTO PP34 (MODIFIED) | 20 < S | | |
| BOND STRENGTH (BS), PSI | ASTM C882 (MODIFIED) | 300 < BS | | |
| CHLORIDE PENETRATION (CHP) (DEPTH FOR PERCENT CHLORIDE OF 0.2% BY MASS OF CEMENT AFTER 90 DAY PONDING), (IN) | ASTM C1543 (MODIFIED) | CHP < 1.5 | | |
| FREEZING AND THAWING DURIBILITY (F/T). (RELATIVE) MODULUS AFTER 300 CYCLES | ASTM C666 PROCEDURE A (MODIFIED) | GRADE 1 | GRADE 2 | GRADE 3 |
| | | 70% ≤ F/T | 80% ≤ F/T | 90% ≤ F/T |

UNOFFICIAL SET

NOT FOR BIDDING

STATE OF TENNESSEE
DEPARTMENT OF TRANSPORTATION
BRIDGE GENERAL NOTES
SHEET 2 OF 2
STATE ROUTE 25
OVER
LIBERTY BRANCH
BR. NO. 83-SR25-10.89
SUMNER COUNTY
2014

BR-117- 144

gyoun
P:\2807118\b\8071b18gn2.sht

8/5/2014
$PRF$

PIN NO. 120026.00

| | | | |
|---|---|---|---|
| DESIGNED BY | GRESHAM SMITH & PARTNERS | DATE | 5/2014 |
| DRAWN BY | R. PALMER | DATE | 5/2014 |
| SUPERVISED BY | T. KNIAZEWYCZ | DATE | 5/2014 |
| CHECKED BY | T. KNIAZEWYCZ | DATE | 6/2014 |

GS&P GRESHAM SMITH AND PARTNERS

TENNESSEE D.O.T.
DESIGN DIVISION
FILE NO.

| TYPE | YEAR | PROJECT NO. | SHEET NO. |
|---|---|---|---|
| MAINT. | 2014 | 83005-4246-04 | 2C |

## ESTIMATED ROADWAY QUANTITIES

| | ITEM NO. | DESCRIPTION | UNIT | QUANTITY |
|---|---|---|---|---|
| (1) | 105-01 | CONSTRUCTION STAKES, LINES AND GRADES | LS | 1 |
| (2) | 203-30.01 | ROADWAY APPROACHES | LS | 1 |
| (3) | 203-50 | CONSTRUCTION OF HAUL ROAD | LS | 1 |
| (4) | 209-05 | SEDIMENT REMOVAL | C.Y. | 25 |
| (5) | 209-08.02 | TEMPORARY SILT FENCE (WITH BACKING) | L.F. | 600 |
| | 209-09.04 | SEDIMENT FILTER BAG(15' X 10') | EACH | 1 |
| | 209-65.04 | TEMPORARY IN STREAM DIVERSION | L.F. | 100 |
| | | | | |
| | 303-01 | MINERAL AGGREGATE, TYPE A BASE, GRADING D | TON | 100 |
| (9) | 303-10.01 | MINERAL AGGREGATE (SIZE 57) | TON | 33 |
| | | | | |
| | 307-01.08 | ASPHALT CONCRETE MIX (PG64-22) (BPMB-HM) GRADING B-M2 | TON | 125 |
| | | | | |
| | 403-01 | BITUMINOUS MATERIAL FOR TACK COAT (TC) | TON | 1 |
| | 411-01.10 | ACS MIX(PG64-22) GRADING D | TON | 100 |
| | | | | |
| (6) | 415-01.02 | COLD PLANING BITUMINOUS PAVEMENT | S.Y. | 725 |
| | | | | |
| | 705-01.01 | GUARDRAIL AT BRIDGE ENDS | L.F. | 81 |
| | 705-02.02 | SINGLE GUARDRAIL (TYPE 2) | L.F. | 28 |
| | 705-04.05 | GUARDRAIL TERMINAL (TYPE-IN-LINE) | EACH | 1 |
| | 705-04.07 | TAN ENERGY ABSORBING TERM (NCHRP 350, TL3) | EACH | 3 |
| | 706-01 | GUARDRAIL REMOVED | L.F. | 260 |
| | | | | |
| (9) | 709-05.05 | MACHINED RIP-RAP (CLASS A-3) | TON | 40 |
| | | | | |
| | 712-01 | TRAFFIC CONTROL | LS | 1 |
| | 712-02.02 | INTERCONNECTED PORTABLE BARRIER RAIL | L.F. | 450 |
| | 712-04.01 | FLEXIBLE DRUMS (CHANNELIZING) | EACH | 36 |
| | 712-05.01 | WARNING LIGHTS (TYPE A) | EACH | 18 |
| | 712-06 | SIGNS (CONSTRUCTION) | S.F. | 266 |
| | 712-07.03 | TEMPORARY BARRICADES (TYPE III) | L.F. | 84 |
| | 712-09.01 | REMOVABLE PAVEMENT MARKING LINE | L.F. | 1100 |
| (7) | 713-16.01 | CHANGEABLE MESSAGE SIGN UNIT | EACH | 6 |
| | | | | |
| | 716-01.11 | RAISED PVMT MARKERS (BI-DIRECTIONAL) (1 COLOR LENS) | EACH | 6 |
| | 716-05.01 | PAINTED PAVEMENT MARKING (4" LINE) | L.M. | 1 |
| (8) | 716-13.06 | SPRAY THERMO PVMT MRKNG (40 mil) (4IN LINE) | L.M. | 1 |
| | 717-01 | MOBILIZATION | LS | 1 |
| | | | | |
| (9) | 740-10.03 | GEOTEXTILE (TYPE III)(EROSION CONTROL) | S.Y. | 80 |

## FOOTNOTES:

(1) ALL DIMENSIONAL DETAILS SHOWN ON PLANS, INCLUDING ELEVATIONS, SHALL BE CHECKED BY THE CONTRACTOR TO ASSURE ACCURACY OF THE LAYOUT PRIOR TO CONSTRUCTION. ALL BRIDGE SUBSTRUCTURES SHALL BE CHECKED AS TO LOCATION, DIMENSIONAL LAYOUTS AND ELEVATIONS BY MEANS OF TWO INDEPENDENT LAYOUT METHODS. ANY ERRORS AND APPARENT DISCREPANCIES FOUND IN PREVIOUS SURVEYS, OR IN EITHER THE SPECIFICATIONS OR SPECIAL PROVISIONS, SHALL BE CALLED TO THE ENGINEER'S ATTENTION BY THE CONTRACTOR IMMEDIATELY AND PRIOR TO PROCEEDING WITH WORK.

(2) NO CHANGE IN COMPENSATION WILL BE MADE FOR NORMAL VARIATIONS IN ESTIMATED QUANTITIES.

(3) ITEM INCLUDES ALL LABOR, EQUIPMENT AND MATERIALS NECESSARY FOR CONSTRUCTION OF HAUL ROAD AND WORK NECESSARY TO RESTORE PROPERTY TO PRE-CONSTRUCTION CONDITION. SEE SHEET 3 FOR DETAILS AND RELATED NOTES.

(4) INCLUDES 15 C.Y. FOR REMOVAL OF SILT FROM BRIDGE OPENING.

(5) CONTRACTOR MAY ELECT TO SUBSTITUTE TEMPORARY SEDIMENT TUBE (12 INCH). TEMPORARY SEDIMENT TUBE (12 INCH) SHALL BE PAID FOR AT THE SAME UNIT PRICE AS BID FOR TEMPORARY SILT FENCE (WITH BACKING).

(6) DEPTH - 1 1/4 " IN ALL AREAS EXCEPT AREA OF PROPOSED PAVEMENT AT BRIDGE ENDS AND BRIDGE. REMOVE ASPHALT FULL DEPTH AT PROPOSED LOCATION OF PAVEMENT AT BRIDGE ENDS AND ACROSS EXISTING BRIDGE.

(7) COORDINATE WITH T.D.O.T. CONSTRUCTION DIVISION FOR LOCATION AND MESSAGE FOR CHANGEABLE MESSAGE SIGNS.

(8) CONTRACTOR MAY ELECT TO SUBSTITUTE PREFORMED PLASTIC FOR THERMOPLASTIC. PREFORMED PLASTIC SHALL BE PAID FOR AT THE SAME UNIT PRICE AS BID FOR THERMOPLASTIC.

(9) INCLUDES QUANTITY FOR TEMPORARY FILTER BAG.

## PROPOSED GUARDRAIL QUANTITIES

| LOCATION | SHEET NO. | 705-01.01 GUARDRAIL AT BRIDGE ENDS (L.F.) | 705-02.02 SINGLE GUARDRAIL (TYPE 2) (L.F.) | 705-04.05 GUARDRAIL TERM.ANCHOR (TYPE IN-LINE) (EACH) | 705-04.07 TAN ENERGY ABSORB. TERM (NCHRP 350,TL3) (EACH) | REMARKS |
|---|---|---|---|---|---|---|
| | | | | | | |
| 09+15.60 TO 09+92.50 (L) | 3 | 26'-10¾" | | | 1 | |
| 09+15.60 TO 09+92.50 (R) | 3 | 26'-10¾" | | | 1 | |
| 10+60.17 (L) | 3 | | 28'-0" * | 1 | | |
| 10+72.00 TO 11+48.9 (R) | 3 | 26'-10¾" | | | 1 | |
| | | | | | | |
| | | | | | | |
| | | | | | | |
| | | | | | | |
| TOTALS | | 80'-9 | 28'-0" | 1 | 3 | |

* CURVED GUARDRAIL

## ESTIMATED PAVING QUANTITIES

| LOCATION | SHEET NO. | ASPHALT CONCRETE MIX (PG64-22) (BPMB-HM) GRADING B-M2 (TONS) 307-01.08 | ACS MIX (PG64-22) GRADING D (TONS) 411-01.10 | BITUMINOUS MATERIAL FOR TACK COAT (TC) (TONS) 403-01 | MINERAL AGGREGATE TYPE A BASE GRADING D (TONS) 303-01 |
|---|---|---|---|---|---|
| | | | | | |
| STA. 8+50.00 TO STA. 12+14.50 | 3 | 125 | 110 | 0.2 | 100 |
| | | | | | |
| | | | | | |
| | | | | | |
| TOTALS | | 125 | 110 | 0.2 | 100 |

UNOFFICIAL SET

NOT FOR BIDDING

BY

STATE OF TENNESSEE
DEPARTMENT OF TRANSPORTATION

ESTIMATED ROADWAY QUANTITIES AND TABULATED QUANTITIES

8/5/2014 2:00:08 PM
P:\2807118\+\SUSR25002c.sht

| TYPE | YEAR | PROJECT NO. | SHEET NO. |
|---|---|---|---|
| MAINT. | 2014 | 83005-4246-04 | 2D |

TENNESSEE D.O.T.
DESIGN DIVISION
FILE NO.

## PROPOSED PAVEMENT SCHEDULE

| | |
|---|---|
| (1) TACK COAT @ 0.10 GAL./S.Y.<br>403-01 BITUMINOUS MATERIAL FOR TACK COAT | (2) GRADING "B-M2" MIXTURE<br>307-01.08 ASPHALT CONCRETE MIX (PG64-22)(BPMB-HM) GRADING B-M2<br>2" THICK (APPROX. 226 LB./S.Y.) - 2 LAYERS - SHOULDER AND FULL DEPTH<br>VARIABLE WITH OVERLAY |
| (3) GRADING "D" SURFACE (PERFORMANCE GRADE PG64-22)<br>@ 1¼" THICK (APPROX. 132.5 LB./S.Y.)<br>411-01.10 ACS MIX (PG64-22) GRADING D | (4) MINERAL AGGREGATE BASE<br>303-01 MINERAL AGGREGATE, TYPE A BASE, GRADING D |

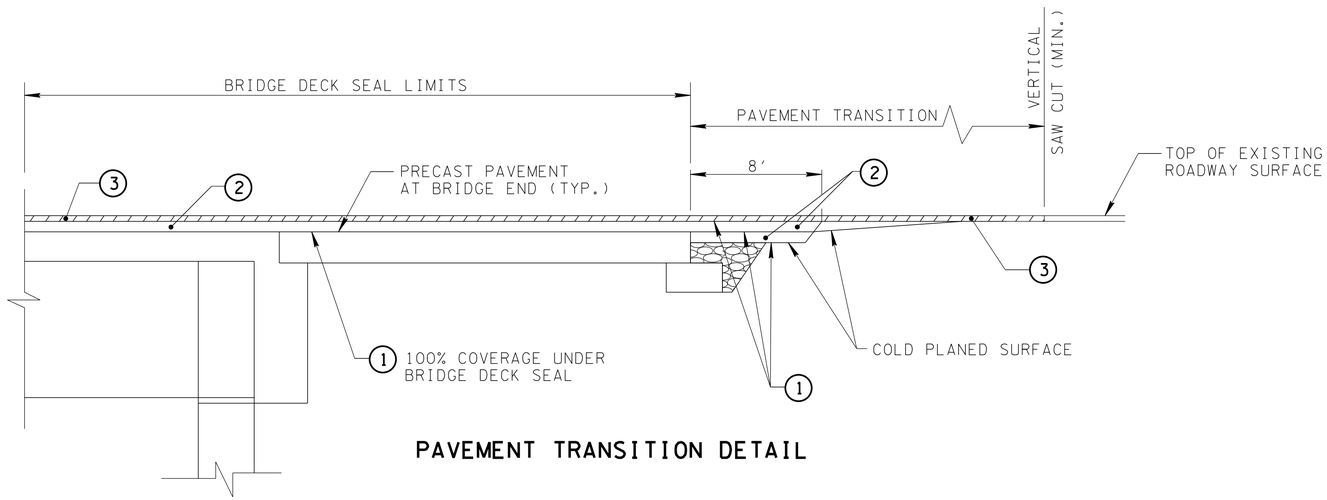


### PAVEMENT TRANSITION DETAIL

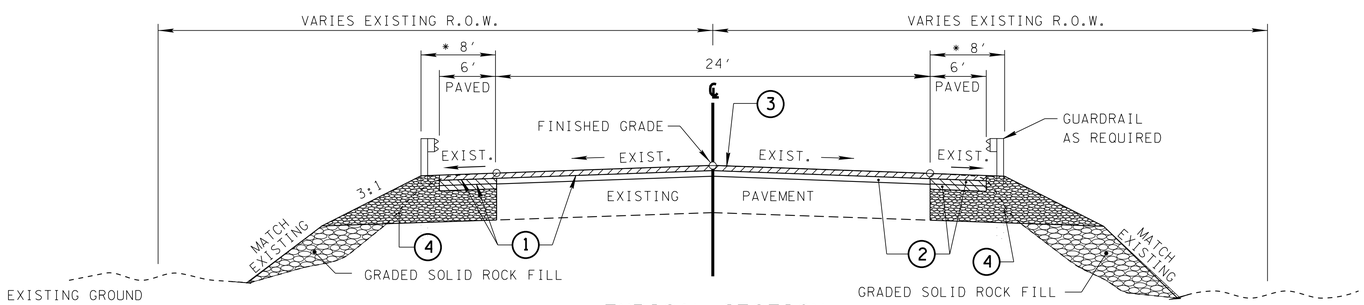


### TYPICAL SECTION

STA. 8+50 TO STA. 12+14.50

NOTE: BRIDGE LIMITS INCLUDED IN PAVING QUANTITIES FOR DECK SEAL.

* TRANSITION FROM EXISTING WIDTH TO PROPOSED WIDTH WITHIN 100' OF BRIDGE LIMITS

OVERLAY EXISTING ROADWAY FOR LIMITS SHOWN ON SHEET 3 OR AS DIRECTED BY THE ENGINEER.

UNOFFICIAL SET

NOT FOR BIDDING

STATE OF TENNESSEE
DEPARTMENT OF TRANSPORTATION

TYPICAL SECTIONS AND PAVEMENT SCHEDULE

8/5/2014 2:01:22 PM
P:\2807118\t\SUSR25002d.sht

| TYPE | YEAR | PROJECT NO. | SHEET NO. |
|---|---|---|---|
| MAINT. | 2014 | 83005-4246-04 | 2E |
| | | | |
| | | | |
| | | | |

# GENERAL NOTES

## GRADING

(1) ANY AREA THAT IS DISTURBED OUTSIDE LIMITS OF CONSTRUCTION DURING THE LIFE 0F THIS PROJECT SHALL BE REPAIRED BY THE CONTRACTOR AT HIS EXPENSE.

(2) THE CONTRACTOR SHALL NOT DISPOSE OF ANY MATERIAL EITHER ON OR OFF STATE-OWNED R.O.W. IN A REGULATORY FLOOD WAY AS DEFINED BY THE FEDERAL EMERGENCY MANAGEMENT AGENCY WITHOUT APPROVAL BY SAME. ALL MATERIAL SHALL BE DISPOSED OF IN UPLAND (NON-WETLAND) AREAS AND ABOVE ORDINARY HIGH WATER OF ANY ADJACENT WATERCOURSE. THIS DOES NOT ELIMINATE THE NEED TO OBTAIN ANY OTHER LICENSES OR PERMITS THAT MAY BE REQUIRED BY ANY OTHER FEDERAL, STATE OR LOCAL AGENCY.

## GUARDRAIL

(1) THE CONTRACTOR SHALL NOT REMOVE ANY SECTIONS OF EXISTING GUARDRAIL TO REWORK SHOULDERS OR FLATTEN SLOPES UNTIL THE ENGINEER CONCURS IN THE NECESSITY OF REMOVAL DUE TO CONSTRUCTION REQUIREMENTS AND THE APPROPRIATE WARNING DEVICES ARE INSTALLED. THE PROPOSED GUARDRAIL, INCLUDING ANY ANCHOR SYSTEM, SHALL BE INSTALLED QUICKLY TO MINIMIZE TRAFFIC EXPOSURE TO ANY HAZARD. NO PAYMENT WILL BE MADE FOR A SECTION OF PROPOSED GUARDRAIL, INCLUDING ANCHORS, UNTIL IT IS COMPLETE IN PLACE.

(2) IF ANY APPROACH END OF A SECTION OF GUARDRAIL OR BRIDGE RAIL MUST TEMPORARILY BE LEFT INCOMPLETE AND EXPOSED TO TRAFFIC, THE CONTRACTOR SHALL USE TWO (2) TEMPORARY BARRICADES OR DRUMS WITH TYPE A LIGHTS AND ROUNDED END ELEMENTS AS MINIMUM MEASURES TO PROTECT TRAFFIC FROM THE HAZARD OF AN EXPOSED END. ALL COST OF FURNISHING AND INSTALLING A TEMPORARY ROUNDED END ELEMENT SHALL BE INCLUDED IN THE COST OF THE PROPOSED GUARDRAIL.

## MISCELLANEOUS

(1) THE CONTRACTOR SHALL BE REQUIRED TO REMOVE AND RESET MAILBOXES WHERE AND AS DIRECTED BY THE ENGINEER.

(2) NOTHING IN THE GENERAL NOTES OR SPECIAL PROVISIONS SHALL RELIEVE THE CONTRACTOR FROM HIS RESPONSIBILITIES TOWARD THE SAFETY AND CONVENIENCE OF THE GENERAL PUBLIC AND THE RESIDENTS ALONG THE PROPOSED CONSTRUCTION AREA

## ROAD CLOSURE

(1) NO LESS THAN SEVEN (7) DAYS PRIOR TO THE CLOSURE OF THE ROAD, THE CONTRACTOR SHALL NOTIFY THE FOLLOWING INDIVIDUALS OR AGENCIES COMPLETELY DESCRIBING THE AFFECTED ROADS AND THE APPROXIMATE DURATION OF THE CONSTRUCTION: THESE PARTIES INCLUDE, BUT ARE NOT LIMITED TO: (1) LOCAL LAW ENFORCEMENT OFFICE, (2) LOCAL FIRE DEPARTMENT, (3) AMBULANCE SERVICE, (4) LOCAL SCHOOL SUPERINTENDENT, (5) UNITED STATES POSTAL SERVICE, AND (6) LOCAL ROAD SUPERINTENDENT.

## PAVEMENT MARKINGS

## TEMPORARY PAVEMENT MARKING ON INTERMEDIATE LAYERS

(1) TEMPORARY PAVEMENT LINE MARKINGS ON INTERMEDIATE LAYERS OF PAVEMENT SHALL BE REFLECTIVE TAPE OR REFLECTORIZED PAINT INSTALLED TO PERMANENT STANDARDS AT THE END OF EACH DAYS WORK. SHORT, UNMARKED SECTIONS SHALL NOT BE ALLOWED. THESE MARKINGS WILL BE MEASURED AND PAID FOR UNDER ITEM NO. 716-05.01, PAINTED PAVEMENT MARKING (4" LINE), L.M.

## FINAL PAVEMENT MARKING 4" SPRAY THERMOPLASTIC (40 mil)

(2) PERMANENT PAVEMENT LINE MARKINGS SHALL BE 4" SPRAY THERMOPLASTIC (40 mil) INSTALLED TO PERMANENT STANDARDS AT THE END OF EACH DAY'S WORK. SHORT UNMARKED SECTIONS SHALL NOT BE ALLOWED. PAVEMENT MARKINGS WILL BE MEASURED AND PAID FOR UNDER ITEM NO. 716-13.06, SPRAY THERMO PVMT MRKNG (40 mil) (4IN LINE), L.M. THE CONTRACTOR SHALL HAVE THE OPTION OF USING REFLECTORIZED PAINT INSTALLED TO PERMANENT STANDARDS AT THE END OF EACH DAY'S WORK AND THEN INSTALLING THE PERMANENT MARKINGS AFTER THE PAVING OPERATION IS COMPLETED. THE TEMPORARY MARKINGS FOR THE FINAL SURFACE WILL NOT BE MEASURED AND PAID FOR DIRECTLY, BUT THE COSTS ARE TO BE INCLUDED IN THE PRICE BID FOR THE PERMANENT MARKINGS.

## PAVING

(1) THE CONTRACTOR SHALL BE REQUIRED TO PAVE IN THE DIRECTION OF TRAFFIC.

(2) THE CONTRACTOR SHALL BE REQUIRED TO COLD PLANE AND PAVE IN THE DIRECTION OF TRAFFIC.

(3) IN ALL CASES, THE LENGTH OF THE PAVEMENT TRANSITION, THE THICKNESS AND WIDTH OF THE RESURFACING AND ANY ADDITIONAL PAVEMENT MATERIALS SHALL BE AS DIRECTED BY THE TDOT ENGINEER.

## GRADED SOLID ROCK

(1) THE ROCK FILL (GRADED SOLID ROCK) MATERIAL SHALL CONSIST OF SOUND, NON-DEGRADABLE LIMESTONE OR SANDSTONE WITH A MAXIMUM SIZE OF 3'-0". AT LEAST 50% (BY WEIGHT) OF THE ROCK SHALL BE UNIFORMLY DISTRIBUTED BETWEEN 1'-0" AND 3'-0" IN DIAMETER, AND NO GREATER THAN 10% (BY WEIGHT) SHALL BE LESS THAN 2" IN DIAMETER. THE MATERIAL SHALL BE ROUGHLY EQUIDIMENSIONAL; THIN, SLABBY MATERIALS WILL NOT BE ACCEPTED. THE CONTRACTOR SHALL BE REQUIRED TO PROCESS THE MATERIAL WITH AN ACCEPTABLE MECHANICAL MEANS (A SCREENING PROCESS CAPABLE OF PRODUCING THE REQUIRED GRADATION). THE ROCK SHALL BE APPROVED BY A REPRESENTATIVE OF THE DIVISION OF MATERIALS AND TESTS BEFORE USE.

(2) THIS GRADED SOLID ROCK MATERIAL SHALL BE PLACED IN LAYERS NOT EXCEEDING FIVE FEET IN DEPTH.

## CONSTRUCTION WORK ZONE & TRAFFIC CONTROL

(1) ADVANCED WARNING SIGNS SHALL NOT BE DISPLAYED MORE THAN FORTY-EIGHT (48) HOURS BEFORE PHYSICAL CONSTRUCTION BEGINS. SIGNS MAY BE ERECTED UP TO ONE WEEK BEFORE NEEDED, IF THE SIGN FACE IS FULLY COVERED.

(2) IF THE CONTRACTOR MOVES OFF THE PROJECT, HE SHALL COVER OR REMOVE ALL UNNEEDED SIGNS AS DIRECTED BY THE ENGINEER. COSTS OF REMOVAL, COVERING, AND REINSTALLING SIGNS SHALL NOT BE MEASURED AND PAID FOR SEPARATELY, BUT ALL COSTS SHALL BE INCLUDED IN THE ORIGINAL UNIT PRICE BID FOR ITEM NO 712-06, SIGNS (CONSTRUCTION) PER SQUARE FOOT.

(3) A LONG TERM BUT SPORADIC USE WARNING SIGN, SUCH AS A FLAGGER SIGN, MAY REMAIN IN PLACE WHEN NOT REQUIRED PROVIDED THE SIGN FACE IS FULLY COVERED.

(4) TRAFFIC CONTROL DEVICES SHALL NOT BE DISPLAYED OR ERECTED UNLESS RELATED CONDITIONS ARE PRESENT NECESSITATING WARNING.

(5) USE OF BARRICADES, PORTABLE BARRIER RAILS, VERTICAL PANELS, AND DRUMS SHALL BE LIMITED TO THE IMMEDIATE AREAS OF CONSTRUCTION WHERE A HAZARD IS PRESENT. THESE DEVICES SHALL NOT BE STORED ALONG THE ROADWAY WITHIN THIRTY (30) FEET OF THE EDGE OF THE TRAVELED WAY BEFORE OR AFTER USE UNLESS PROTECTED BY GUARDRAIL, BRIDGE RAIL, AND/OR BARRIERS INSTALLED FOR OTHER PURPOSES. THESE DEVICES SHALL BE REMOVED FROM THE CONSTRUCTION WORK ZONE WHEN THE ENGINEER DETERMINES THEY ARE NO LONGER NEEDED. WHERE THERE IS INSUFFICIENT RIGHT-OF-WAY TO PROVIDE FOR THIS REQUIRED SETBACK, THE CONTRACTOR SHALL DETERMINE THE ALTERNATE LOCATIONS AND REQUEST THE ENGINEER'S APPROVAL TO USE THEM.

(6) THE CONTRACTOR SHALL NOT BE PERMITTED TO PARK ANY VEHICLES OR CONSTRUCTION EQUIPMENT DURING PERIODS OF INACTIVITY, WITHIN THIRTY (30) FEET OF THE EDGE OF PAVEMENT WHEN THE LANE IS OPEN TO TRAFFIC UNLESS PROTECTED BY GUARDRAIL, BRIDGE RAIL, AND/OR BARRIERS INSTALLED FOR OTHER PURPOSES. PRIVATELY OWNED VEHICLES SHALL NOT BE ALLOWED TO PARK WITHIN THIRTY (30) FEET OF A OPEN TRAFFIC LANE AT ANY TIME UNLESS PROTECTED AS DESCRIBED ABOVE. WHERE THERE IS INSUFFICIENT RIGHT-OF-WAY TO PROVIDE FOR THIS REQUIRED SETBACK, THE CONTRACTOR SHALL DETERMINE THE ALTERNATE LOCATIONS AND REQUEST THE ENGINEER'S APPROVAL TO USE THEM.

(7) ALL DETOUR AND CONSTRUCTION SIGNING SHALL BE IN STRICT ACCORDANCE WITH THE MANUAL ON UNIFORM TRAFFIC CONTROL DEVICES.

UNOFFICIAL SET

NOT FOR BIDDING

STATE OF TENNESSEE
DEPARTMENT OF TRANSPORTATION

GENERAL NOTES

| TYPE | YEAR | PROJECT NO. | SHEET NO. |
|---|---|---|---|
| MAINT. | 2014 | 83005-4246-04 | 2F |
| | | | |
| | | | |
| | | | |

# EROSION PREVENTION AND SEDIMENT CONTROL

## DISTURBED AREA

(1) PRE-CONSTRUCTION VEGETATIVE GROUND COVER SHALL NOT BE DESTROYED, REMOVED OR DISTURBED (I.E. CLEARING AND GRUBBING INITIATED) MORE THAN 15 CALENDAR DAYS PRIOR TO GRADING OR EARTH MOVING ACTIVITIES UNLESS THE AREA IS MULCHED, SEEDED WITH MULCH, OR OTHER TEMPORARY COVER IS INSTALLED.

(2) CLEARING, GRUBBING, AND OTHER DISTURBANCE TO RIPARIAN VEGETATION SHALL BE LIMITED TO THE MINIMUM NECESSARY FOR SLOPE CONSTRUCTION AND EQUIPMENT OPERATIONS. EXISTING VEGETATION SHOULD BE PRESERVED TO THE MAXIMUM EXTENT POSSIBLE. UNNECESSARY VEGETATION REMOVAL IS PROHIBITED.

(3) ALL DISTURBED AREAS SHALL BE PROPERLY STABILIZED AS SOON AS PRACTICABLE. PRIORITY SHALL BE GIVEN TO FINISHING OPERATIONS AND PERMANENT EPSC MEASURES OVER TEMPORARY EPSC MEASURES ON ALL PROJECTS.

## SEDIMENT CONTROL

(4) EPSC MEASURES SHALL BE INSTALLED CONCURRENTLY WITH CLEARING OPERATIONS, SHALL BE FUNCTIONAL PRIOR TO ANY EARTH MOVING OPERATIONS, AND SHALL BE MAINTAINED THROUGHOUT THE CONSTRUCTION PERIOD.

(5) THE CONTRACTOR SHALL ESTABLISH AND MAINTAIN A PROACTIVE METHOD TO PREVENT THE OFF-SITE MIGRATION OR DEPOSIT OF SEDIMENT ON ROADWAYS USED BY THE GENERAL PUBLIC. IF SEDIMENT ESCAPES THE CONSTRUCTION SITE, OFF-SITE ACCUMULATIONS OF SEDIMENT THAT HAVE NOT REACHED A STREAM MUST BE REMOVED AT A FREQUENCY SUFFICIENT TO MINIMIZE OFF-SITE IMPACTS (E.G., FUGITIVE SEDIMENT THAT HAS ESCAPED THE CONSTRUCTION SITE AND HAS COLLECTED IN A STREET MUST BE REMOVED SO THAT IT IS NOT SUBSEQUENTLY WASHED INTO STORM SEWERS AND STREAMS BY THE NEXT RAIN AND/OR SO THAT IT DOES NOT POSE A SAFETY HAZARD TO USERS OF PUBLIC STREETS). ARRANGEMENTS CONCERNING REMOVAL OF SEDIMENT ON ADJOINING PROPERTY MUST BE SETTLED WITH THE ADJOINING PROPERTY OWNER BEFORE REMOVAL OF SEDIMENT.

(6) OFFSITE VEHICLE TRACKING OF SEDIMENTS AND THE GENERATION OF DUST SHALL BE MINIMIZED. A STABILIZED CONSTRUCTION ACCESS (A POINT OF ENTRANCE/EXIT TO THE CONSTRUCTION PROJECT) SHALL BE PROVIDED, AS NEEDED, TO REDUCE THE TRACKING OF MUD AND DIRT ONTO PUBLIC ROADS BY CONSTRUCTION VEHICLES.

(7) WATER PUMPED FROM WORK AREAS AND EXCAVATION MUST BE HELD IN SETTLING BASINS OR TREATED BY FILTRATION OR CHEMICAL TREATMENT PRIOR TO ITS DISCHARGE INTO SURFACE WATERS. ALL PHYSICAL AND/OR CHEMICAL TREATMENT WILL BE APPLIED IN ACCORDANCE WITH MANUFACTURER'S GUIDELINES AND FULLY DESCRIBED IN THE EPSC PLANS. WATER MUST BE HELD IN SETTLING BASINS UNTIL AT LEAST AS CLEAR AS THE RECEIVING WATERS. SETTLING BASINS SHALL NOT BE LOCATED CLOSER THAN 20 FEET FROM THE TOP BANK OF A STREAM. SETTLING BASINS AND SEDIMENT TRAPS SHALL BE PROPERLY DESIGNED ACCORDING TO THE SIZE OF THE DRAINAGE AREA OR VOLUME OF WATER TO BE TREATED. TREATED WATER MUST BE DISCHARGED THROUGH A PIPE OR WELL VEGETATED OR LINED CHANNEL, SO THAT THE DISCHARGE DOES NOT CAUSE EROSION OR SEDIMENT TRANSPORT. DISCHARGES FROM BASINS AND IMPOUNDMENTS SHALL UTILIZE OUTLET STRUCTURES THAT ONLY WITHDRAW WATER FROM NEAR THE SURFACE OF THE BASIN OR IMPOUNDMENT. DISCHARGES MUST NOT CAUSE AN OBJECTIONABLE COLOR CONTRAST WITH THE RECEIVING STREAM.

(8) TEMPORARY EPSC MEASURES MAY BE REMOVED AT THE BEGINNING OF THE WORKDAY, BUT MUST BE REPLACED AT THE END OF THE WORKDAY.

## STREAM/WETLAND

(9) SOIL MATERIALS MUST BE PREVENTED FROM ENTERING WATERS OF THE STATE/U.S. EPSC MEASURES TO PROTECT WATER QUALITY MUST BE MAINTAINED THROUGHOUT THE CONSTRUCTION PERIOD. APPROPRIATE EPSC MEASURES MUST BE INSTALLED ALONG THE BASE OF ALL FILLS AND CUTS, ON THE DOWNHILL SIDE OF STOCKPILED SOIL, AND ALONG STREAM BANKS IN CLEARED AREAS TO PREVENT SEDIMENT MIGRATION INTO STREAMS IN ACCORDANCE WITH TDOT STANDARDS. THEY MUST BE INSTALLED ON THE CONTOUR, ENTRENCHED AND STAKED, AND EXTEND THE WIDTH OF THE AREA TO BE CLEARED.

(10) STREAM BEDS SHALL NOT BE USED AS TRANSPORTATION ROUTES FOR CONSTRUCTION EQUIPMENT. TEMPORARY CROSSINGS MUST BE LIMITED TO ONE POINT PER STREAM AND EPSC MEASURES MUST BE USED WHERE STREAM BANKS ARE DISTURBED. WHERE THE STREAMBED IS NOT COMPROMISED OF BEDROCK, A PAD OF CLEAN ROCK MUST BE USED AT THE CROSSING POINT AND CULVERTED TO PREVENT THE IMPOUNDMENT OF WATER FLOW. CLEAN ROCK IS ROCK OF VARIOUS TYPE AND SIZE, DEPENDING UPON APPLICATION, WHICH CONTAINS NO FINES, SOILS, OR OTHER WASTES OR CONTAMINANTS. OTHER MATERIALS USED FOR ALL TEMPORARY FILLS MUST BE COMPLETELY REMOVED IN THEIR ENTIRETY AFTER THE WORK IS COMPLETED AND THE AFFECTED AREAS RETURNED TO THEIR PREEXISTING ELEVATION. ALL TEMPORARY CROSSINGS MUST BE CONSTRUCTED IN ACCORDANCE WITH STD. DWG. EC-STR-25 UNLESS SPECIFICALLY ADDRESSED IN THE EPSC PLANS. ALTERNATELY, PLACING A TEMPORARY BRIDGE (BAILEY BRIDGE OR EQUIVALENT, TIMBERS, ETC.) FROM TOP OF BANK TO TOP OF BANK OR APPROPRIATE USE OF BARGES AT THE CROSSING TO AVOID DISTURBANCE OF THE STREAMBED IS AN ACCEPTABLE OPTION.

(11) INSTREAM EPSC DEVICES REQUIRE THE ENVIRONMENTAL DIVISION'S PERMITS SECTION REVIEW AND MUST BE PROCESSED BY THE PERMITS SECTION TO OBTAIN TDEC, USACE, AND TVA PERMITS.

(12) THE WIDTH OF THE FILL ASSOCIATED WITH TEMPORARY CROSSINGS SHALL BE LIMITED TO THE MINIMUM NECESSARY FOR THE ACTUAL CROSSING.

## SPECIES

(13) NO ACTIVITY MAY SUBSTANTIALLY DISRUPT THE MOVEMENT OF THOSE SPECIES OF AQUATIC LIFE INDIGENOUS TO THE WATER BODY, INCLUDING THOSE SPECIES THAT NORMALLY MIGRATE THROUGH THE AREA. THE EPSC MEASURES SHALL BE MODIFIED TO PREVENT NEGATIVE IMPACTS TO LEGALLY PROTECTED STATE OR FEDERAL FAUNA OR FLORA OR AS INDICATED IN THE ECOLOGICAL STUDIES OR ON THE PERMIT(S).

## INSPECTION, MAINTENANCE, REPAIR

(14) INSPECTION, REPAIR, AND MAINTENANCE OF EPSC MEASURES/ STRUCTURES IS TO BE PERFORMED ON A REGULAR BASIS. SEDIMENT SHALL BE REMOVED FROM SEDIMENT CONTROL STRUCTURES WHEN THE DESIGN CAPACITY HAS BEEN REDUCED BY FIFTY PERCENT (50%). DURING SEDIMENT REMOVAL, THE CONTRACTOR SHALL TAKE CARE TO ENSURE THAT STRUCTURAL COMPONENTS OF EPSC MEASURES ARE NOT DAMAGED AND THUS MADE INEFFECTIVE. IF DAMAGE DOES OCCUR, THE CONTRACTOR SHALL REPAIR THE STRUCTURES AT THE CONTRACTOR'S OWN EXPENSE.

(15) INSPECTION OF EPSC MEASURES SHALL BE DONE AT LEAST TWICE PER CALENDAR WEEK AT LEAST 72 HOURS APART. A CALENDAR WEEK IS DEFINED AS SUNDAY THROUGH SATURDAY. QUALITY ASSURANCE/QUALITY CONTROL SITE ASSESSMENT OF EPSC SHALL BE PERFORMED PER THE TDOT ENVIRONMENTAL DIVISION'S COMPREHENSIVE INSPECTION OFFICE GUIDELINES.

## MATERIALS

(16) WASTE AND BORROW AREAS SHALL BE LOCATED IN NON-WETLAND AREAS AND ABOVE THE 100-YEAR, FEDERAL EMERGENCY MANAGEMENT AGENCY FLOODPLAIN. BORROW AND WASTE DISPOSAL AREAS SHALL NOT AFFECT ANY WATERS OF THE STATE/U.S. UNLESS THESE AREAS ARE SPECIFICALLY COVERED BY AN ARAP, 404, OR NPDES PERMIT, OBTAINED SOLELY BY THE CONTRACTOR.

## SWPPP, PERMITS, PLANS, RECORDS

(17) THE CONTRACTOR SHALL BE SOLELY RESPONSIBLE FOR AND OBTAIN ANY NECESSARY ENVIRONMENTAL PERMITS OR APPROVALS, INCLUDING BUT NOT LIMITED TO TDEC ARAP/401, USACE SECTION 404, TVA SECTION 26A, AND TDEC NPDES PERMITS, FROM FEDERAL, STATE AND/OR LOCAL AGENCIES REGARDING THE OPERATION OF ANY PROJECT-DEDICATED ASPHALT AND/OR CONCRETE PLANTS.

(18) ANY DISAGREEMENT BETWEEN THE PROJECT PLANS, THE PROJECT AS CONSTRUCTED, AND THE PERMIT(S) ISSUED FOR THE PROJECT, SHALL BE BROUGHT TO THE ATTENTION OF THE TDOT PROJECT ENGINEER. THE ENVIRONMENTAL DIVISION, DESIGN DIVISION, AND HEADQUARTERS CONSTRUCTION OFFICE SHALL BE CONTACTED IN THESE INSTANCES AND DECIDE WHICH HAS PRECEDENCE AND WHETHER PERMIT OR PLANS REVISIONS ARE NEEDED. IN GENERAL, PERMIT CONDITIONS WILL PREVAIL.

## LITTER, DEBRIS, WASTE, PETROLEUM

(19) THE CONTRACTOR SHALL ESTABLISH AND MAINTAIN A PROACTIVE METHOD TO PREVENT LITTER, CONSTRUCTION DEBRIS, AND CONSTRUCTION WASTES FROM ENTERING WATERS OF THE STATE/U.S. THESE MATERIALS WILL BE PICKED UP AND REMOVED FROM STORMWATER EXPOSURE PRIOR TO ANTICIPATED STORM EVENTS. AFTER USE, MATERIALS USED FOR EPSC WILL BE REMOVED FROM THE SITE.

(20) THE CONTRACTOR SHALL TAKE APPROPRIATE STEPS TO ENSURE THAT PETROLEUM PRODUCTS OR OTHER CHEMICAL POLLUTANTS ARE PREVENTED FROM ENTERING WATERS OF THE STATE/U.S. ALL EQUIPMENT REFUELING, SERVICING, AND STAGING AREAS SHALL COMPLY WITH ALL LOCAL, STATE, AND FEDERAL LAWS, RULES, REGULATIONS, AND ORDINANCES, INCLUDING THOSE OF THE NATIONAL FIRE PROTECTION ASSOCIATION (NFPA). APPROPRIATE CONTAINMENT MEASURES FOR THESE AREAS SHALL BE USED. ALL SPILLS MUST BE REPORTED TO THE APPROPRIATE AGENCY, AND MEASURES SHALL BE TAKEN IMMEDIATELY TO PREVENT THE POLLUTION OF WATERS OF THE STATE/U.S., INCLUDING GROUNDWATER, SHOULD A SPILL OCCUR.

UNOFFICIAL SET

NOT FOR BIDDING

STATE OF TENNESSEE
DEPARTMENT OF TRANSPORTATION

GENERAL NOTES

| TYPE | YEAR | PROJECT NO. | SHEET NO. |
|---|---|---|---|
| MAINT. | 2014 | 83005-4246-04 | 3 |
| | | | |
| | | | |
| | | | |

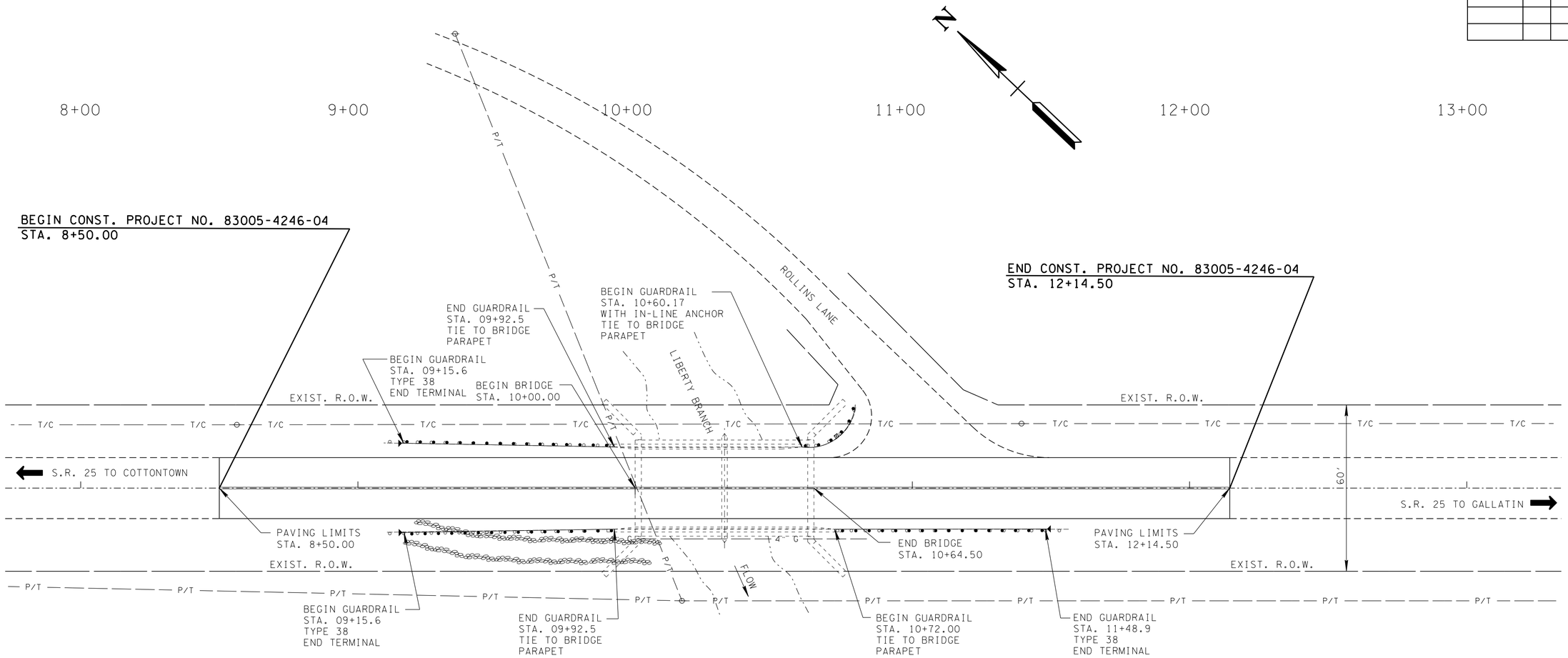


* NOTE: STATIONS ARE BASED OFF AN ASSUMED STATION OF 10+00.00 AT THE EXISTING BEGINNING OF BRIDGE.

DENOTES: PROPOSED HAUL ROAD (IF REQ'D)

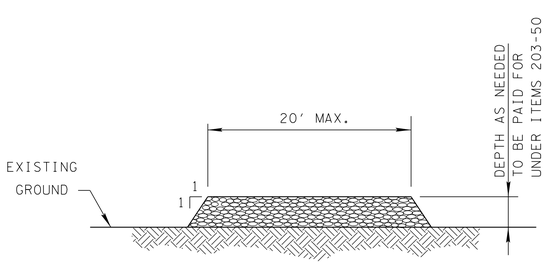


NOTE: FOLLOWING CONSTRUCTION, THE CONTRACTOR SHALL RESTORE THE PRE-CONSTRUCTION ELEVATION IN THE PROJECT VICINITY USING NATIVE MATERIAL REMOVED FROM THE SITE.

**HAUL ROAD**

(TYP. CROSS SECTION)
ITEM 203-50

NOTES:

1) PRIOR TO CONSTRUCTION, FINAL HAUL ROAD/CROSSING LOCATIONS SHALL BE DETERMINED BY THE CONTRACTOR AND APPROVED BY THE ENGINEER.
2) FOLLOWING CONSTRUCTION OF EACH PHASE, ALL MATERIALS USED FOR THE TEMPORARY CROSSING (IF NEEDED) SHALL BE REMOVED AND DISTURBED STREAM BANKS SHALL BE RESTORED AND STABILIZED.
3) COST OF ANY TEMPORARY PIPE NEEDED TO CONSTRUCT HAUL ROAD SHALL BE INCLUDED IN ITEM NO. 203-50.
4) AREA OF ROAD AND FENCE THAT IS DAMAGED OR REMOVED DURING CONSTRUCTION SHALL BE REPAIRED OR REPLACED UPON COMPLETION OF WORK BY THE CONTRACTOR AT HIS EXPENSE.
5) ALL HAUL ROAD MATERIAL TO BE COMPLETELY REMOVED AFTER WORK IS COMPLETED.
6) HAUL ROAD SHALL BE CONSTRUCTED OF SOUND, NON-DEGRADABLE SANDSTONE OR LIMESTONE WITH A MAXIMUM SIZE OF 3 FEET.
7) COST OF PLACEMENT & REMOVAL OF HAUL ROAD SHALL BE INCLUDED IN ITEM NO. 203-50.
8) COST OF TOPSOIL, SEEDING, AND MULCH SHALL BE INCLUDED IN ITEM NO. 203-50.

UNOFFICIAL SET

NOT FOR BIDDING

STATE OF TENNESSEE
DEPARTMENT OF TRANSPORTATION

# PRESENT AND PROPOSED LAYOUT

STA. 8+50 TO STA. 12+15

SCALE: 1"= 20'

8/5/2014 2:04:50 PM
P:\2807118\1\SUSR25003.sht

| TYPE | YEAR | PROJECT NO. | SHEET NO. |
|---|---|---|---|
| MAINT. | 2014 | 83005-4246-04 | 4 |
| | | | |
| | | | |
| | | | |

SEE SHEET 4A FOR SIGN LEGEND AND TRAFFIC CONTROL NOTES

| TRAFFIC CONTROL LEGEND | |
|---|---|
| SYMBOL | ITEM |
| ▶ | SIGN (CONSTRUCTION) |
| ▦ | CHANGEABLE MESSAGE SIGN |

UNOFFICIAL SET

NOT FOR BIDDING

STATE OF TENNESSEE
DEPARTMENT OF TRANSPORTATION

# TRAFFIC CONTROL PLAN

8/5/2014 2:04:51 PM
P:\2807118\T\SUSR25004.sht

| TYPE | YEAR | PROJECT NO. | SHEET NO. |
|---|---|---|---|
| MAINT. | 2014 | 83005-4246-04 | 4A |
| | | | |
| | | | |
| | | | |

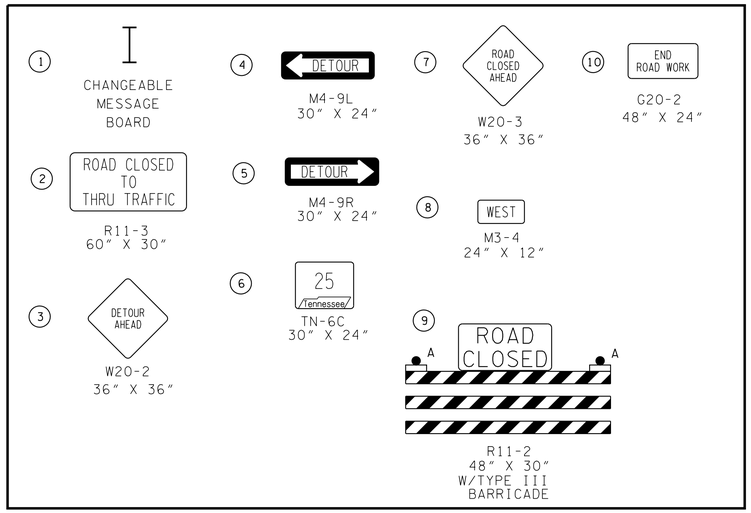


SEE SHEET 4 FOR SIGN LOCATION MAP

## TRAFFIC CONTROL NOTES

1. CONTRACTOR SHALL INSTALL MESSAGE BOARDS IN THE AREAS OF:
   - S.R. 174 (LONG HOLLOW PK.) AND S.R. 386 (VIETNAM VETERANS BLVD.); S.R. 25 AND S.R. 109; S.R. 25 AND S.R. 6 (U.S. 31E);
   - S.R. 174 (LONG HOLLOW PK.) AND S.R. 109; S.R. 25 AND UPPER STATION CAMP CREEK ROAD.
2. MESSAGE BOARDS SHALL BE INSTALLED THREE WEEKS IN ADVANCE OF THE WEEKEND CLOSURE THAT CONSTRUCTION SHALL TAKE PLACE. MESSAGES SHOULD BE WORDED IN A WAY TO GIVE DRIVERS AMPLE NOTICE OF THE ROAD BEING CLOSED AND ALTERNATE ROUTES.
3. RESIDENTS AND BUSINESSES ALONG S.R. 25 AND IN THE AREAS OF THE CONSTRUCTION SHALL RECEIVE WRITTEN NOTIFICATION OF CONSTRUCTION TO BE PERFORMED AND SHALL RECEIVE THIS NOTIFICATION TWO WEEKS IN ADVANCE.
4. DURING THE CONSTRUCTION CONTRACTOR SHALL PROVIDE LOCAL DETOUR SIGNS FOR DRIVERS WHO END UP IN CONSTRUCTION ZONE AND NEED HELP GETTING AROUND THE WEEKEND ROAD CLOSURE.
5. DURING CONSTRUCTION OF THE APPROACHES, THE CONTRACTOR SHALL MAINTAIN 11'-0" TRAFFIC LANES. TEMPORARY LANE CLOSURES BY FLAGMAN WILL BE ALLOWED WITH PRIOR APPROVAL OF THE ENGINEER DURING THE HOURS OF 9:00 AM UNTIL 3:00 PM AND 8:00 PM UNTIL 5:00 AM.

### 712-06 SIGNS ( CONSTRUCTION )

| MUTCD DESIGNATION | DESCRIPTION | QUANTITY | SIGN FACE DIMENSIONS | TOTAL SQ. FT. |
|---|---|---|---|---|
| G20-2 | END ROAD WORK | 2 | 48"x24" | 16 |
| | | | | |
| M3-4 | DIRECTION - WEST | 2 | 24"x12" | 4 |
| M4-9L | DETOUR LEFT | 8 | 30"x24" | 40 |
| M4-9R | DETOUR RIGHT | 7 | 30"x24" | 35 |
| | | | | |
| R11-2 | ROAD CLOSED | 4 | 48"x30" | 40 |
| R11-3 | ROAD CLOSED TO THRU TRAFFIC | 2 | 60"x30" | 25 |
| | | | | |
| TN-6C | PRIMARY STATE ROUTE | 14 | 30"x24" | 70 |
| | | | | |
| W20-2 | DETOUR AHEAD | 2 | 36"x36" | 18 |
| W20-3 | ROAD CLOSED AHEAD | 2 | 36"x36" | 18 |
| | | | | |
| | | | | |
| | | | | |
| | | | TOTAL | 266 |

### TRAFFIC CONTROL QUANTITIES

| ITEM NO. | DESCRIPTION | UNIT | QUANTITY |
|---|---|---|---|
| 712-01 | TRAFFIC CONTROL | LUMP SUM | 1 |
| 712-02.02 | INTERCONNECTED PORTABLE BARRIER RAIL | L.F. | 450 |
| 712-04.01 | FLEXIBLE DRUMS (CHANNELIZATION) | EACH | 36 |
| | | | |
| 712-05.01 | TYPE "A" WARNING LIGHTS | EACH | 18 |
| 712-06 | SIGNS (CONSTRUCTION) | S.F. | 266 |
| 712-07.03 | TEMPORARY BARRICADES (TYPE III) | L.F. | 84 |
| 712-09.01 | REMOVABLE PAVEMENT MARKING LINE | L.F. | 1100 |
| | | | |
| 713-16.01 | CHANGEABLE MESSAGE SIGN UNIT | EACH | 6 |
| | | | |
| 716-01.11 | RAISED PVMT MARKERS (BI-DIRECTIONAL) (1 COLOR LENS) | EACH | 6 |
| | | | |

## CONSTRUCTION WORK ZONE AND TRAFFIC CONTROL NOTES

1. ADVANCED WARNING SIGNS SHALL NOT BE DISPLAYED MORE THAN FORTY- EIGHT (48) HOURS BEFORE PHYSICAL CONSTRUCTION BEGINS. SIGNS MAY BE ERECTED UP TO ONE WEEK BEFORE NEEDED, IF THE SIGN FACE IS FULLY COVERED.
2. IF THE CONTRACTOR MOVES OFF THE PROJECT, HE SHALL COVER OR REMOVE ALL UNNEEDED SIGNS AS DIRECTED BY THE ENGINEER. COSTS OF REMOVAL, COVERING, AND REINSTALLING SIGNS SHALL NOT BE MEASURED AND PAID FOR SEPARATELY, BUT ALL COSTS SHALL BE INCLUDED IN THE ORIGINAL UNIT PRICE BID FOR ITEM NO 712-06, SIGNS (CONSTRUCTION) PER SQUARE FOOT.
3. A LONG TERM BUT SPORADIC USE WARNING SIGN, SUCH AS A FLAGGER SIGN, MAY REMAIN IN PLACE WHEN NOT REQUIRED PROVIDED THE SIGN FACE IS FULLY COVERED.
4. TRAFFIC CONTROL DEVICES SHALL NOT BE DISPLAYED OR ERECTED UNLESS RELATED CONDITIONS ARE PRESENT NECESSITATING WARNING.
5. USE OF BARRICADES, PORTABLE BARRIER RAILS, VERTICAL PANELS, AND DRUMS SHALL BE LIMITED TO THE IMMEDIATE AREAS OF CONSTRUCTION WHERE A HAZARD IS PRESENT. THESE DEVICES SHALL NOT BE STORED ALONG THE ROADWAY WITHIN THIRTY (30) FEET OF THE EDGE OF THE TRAVELED WAY BEFORE OR AFTER USE UNLESS PROTECTED BY GUARDRAIL, BRIDGE RAIL, AND/OR BARRIERS INSTALLED FOR OTHER PURPOSES FOR ROADWAYS WITH CURRENT ADT'S LESS THAN 1500 AND DESIGN SPEED OF LESS THAN 60 MPH. THIS DISTANCE SHALL INCREASE TO FORTY-FIVE (45) FEET FOR ROADWAYS WITH CURRENT ADT'S OF 1500 OR GREATER AND DESIGN SPEED OF 60 MPH OR GREATER OR ON THE OUTSIDE OF A HORIZONTAL CURVE. THESE DEVICES SHALL BE REMOVED FROM THE CONSTRUCTION WORK ZONE WHEN THE ENGINEER DETERMINES THEY ARE NO LONGER NEEDED. WHERE THERE IS INSUFFICIENT RIGHT-OF-WAY TO PROVIDE FOR THIS REQUUIRED SETBACK, THE CONTRACTOR SHALL DETERMINE THE ALTERNATE LOCATIONS AND REQUEST THE ENGINEER'S APPROVAL TO USE THEM.
6. THE CONTRACTOR SHALL NOT BE PERMITTED TO PARK ANY VEHICLES OR CONSTRUCTION EQUIPMENT DURING PERIODS OF INACTIVITY, WITHIN THIRTY (30) FEET OF THE EDGE OF PAVEMENT WHEN THE LANE IS OPEN TO TRAFFIC UNLESS PROTECTED BY GUARDRAIL, BRIDGE RAIL, AND/OR BARRIERS INSTALLED FOR OTHER PURPOSES FOR ROADWAYS WITH CURRENT ADT'S LESS THAN 1500 AND DESIGN SPEED OF LESS THAN 60 MPH. THIS DISTANCE SHALL BE INCREASED TO FORTY-FIVE (45) FEET FOR ROADWAYS WITH CURRENT ADT'S OF 1500 OR GREATER AND DESIGN SPEED OF 60 MPH OR GREATER OR ON THE OUTSIDE OF A HORIZONTAL CURVE. PRIVATELY OWNED VEHICLES SHALL NOT BE ALLOWED TO PARK WITHIN THIRTY (30) FEET OF AN OPEN TRAFFIC LANE AT ANY TIME UNLESS PROTECTED AS DESCRIBED ABOVE FOR ROADWAYS WITH CURRENT ADT'S LESS THAN 1500 AND DESIGN SPEED OF LESS THAN 60 MPH. THIS DISTANCE SHALL BE INCREASED TO FORTY-FIVE (45) FEET FOR ROADWAYS WITH CURRENT ADT'S OF 1500 OR GREATER AND DESIGN SPEED OF 60 MPH OR GREATER OR ON THE OUTSIDE OF A HORIZONTAL CURVE. WHERE THERE IS INSUFFICIENT RIGHT-OF-WAY TO PROVIDE FOR THIS REQUIRED SETBACK, THE CONTRACTOR SHALL DETERMINE THE ALTERNATE LOCATIONS AND REQUEST THE ENGINEER'S APPROVAL TO USE THEM.
7. ALL DETOUR AND CONSTRUCTION SIGNING SHALL BE IN STRICT ACCORDANCE WITH THE MANUAL ON UNIFORM TRAFFIC CONTROL DEVICES.

## TRAFFIC CONTROL - SPECIAL NOTES

1. THE TRAFFIC CONTROL PLAN IS TO SERVE AS A GUIDE ONLY. THIS PLAN DOES NOT RELIEVE THE CONTRACTOR OF THE RESPONSIBILITY OF INSTALLING TRAFFIC CONTROL DEVICES IN ACCORDANCE WITH THE CURRENT EDITION OF THE MANUAL ON UNIFORM TRAFFIC CONTROL DEVICES.
2. IF ADDITIONAL SIGNS ARE DEEMED NECESSARY BY THE ENGINEER, THEY SHALL BE FURNISHED AND INSTALLED AT THE BID PRICE FOR ITEM NO. 712-06 SIGNS (CONSTRUCTION) S.F.
3. ALL LOCAL EMERGENCY AGENCIES AND RESIDENCES WITHIN THE IMMEDIATE AREA OF S.R. 25 AND S.R. 109 INTERSECTION SHALL BE NOTIFIED NOT LESS THAN 48 HOURS IN ADVANCE OF BRIDGE CONSTRUCTION WHICH MAY AFFECT ACCESS TO THESE AREAS.
4. NO LESS THAN SEVEN (7) DAYS PRIOR TO ESTABLISHING ROAD CLOSURE OF STATE ROUTE 25 AT STATE ROUTE 109, THE CONTRACTOR SHALL NOTIFY THE FOLLOWING INDIVIDUALS OR AGENCIES COMPLETELY DESCRIBING THE AFFECTED ROADS AND THE APPROXIMATE DURATION OF THE CONSTRUCTION: THESE PARTIES INCLUDE, BUT ARE NOT LIMITED TO: (1) LOCAL LAW ENFORCEMENT OFFICE, (2)LOCAL FIRE DEPARTMENT, (3)AMBULANCE SERVICE, (4)LOCAL SCHOOL SUPERINTENDENT, (5) UNITED STATES POSTAL SERVICE.

UNOFFICIAL SET

NOT FOR BIDDING

STATE OF TENNESSEE
DEPARTMENT OF TRANSPORTATION

TRAFFIC CONTROL PLAN

8/5/2014 2:04:52 PM
P:\2807\8\t\SUSR25004a.sht

| TYPE | YEAR | PROJECT NO. | SHEET NO. |
|---|---|---|---|
| MAINT. | 2014 | 83005-4246-04 | 5 |
| | | | |
| | | | |
| | | | |

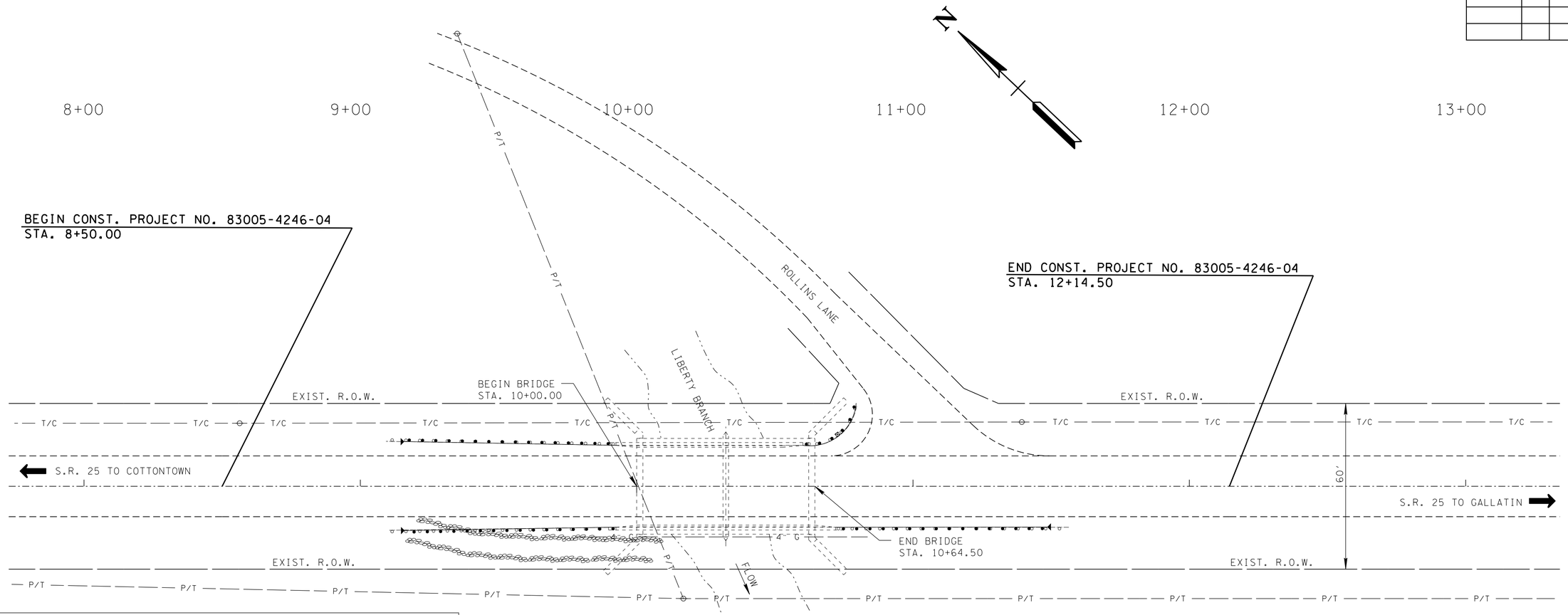


## UTILITY OWNERS

TELEPHONE: AT&T
333 COMMERCE STREET
NASHVILLE, TN 37201
(615) 214-7318

ELECTRIC: CEMC
1940 MADISON EXTENSION
CLARKSVILLE, TN 37043
(931) 645-2481 X1117

GAS: GALLATIN PUBLIC UTILITIES
239 HANCOCK ST
GALLATIN, TN 37066
(615) 451-5922

CABLE: COMCAST
660 MAINSTREAM DR
NASHVILLE, TN 37228
(615) 229-5904

* NOTE: STATIONS ARE BASED OFF AN ASSUMED STATION OF 10+00.00 AT THE EXISTING BEGINNING OF BRIDGE.

DENOTES: PROPOSED HAUL ROAD (IF REQ'D)

## BURIED UTILITIES NOTE

BURIED UTILITIES ARE SHOWN AT THEIR APPROXIMATE LOCATION BASED UPON INFORMATION OBTAINED FROM UTILITY COMPANIES AND FIELD EVIDENCE. OTHER BURIED UTILITIES MIGHT EXIST ON THE SUBJECT SITE WHICH ARE NOT SHOWN ON THIS DRAWING. USE EXTREME CAUTION DURING EXCAVATION PROCEDURES AND CONTACT TENNESSEE 811 @ 811 OR 1-800-351-1111 FOR EXACT LOCATION OF BURIED FACILITIES PRIOR TO EXCAVATION OPERATIONS.

**Tennessee 811**

Know what's **below.**
**Call** before you dig.

Call 811 or 800-351-1111
www.tnonecall.com
Two Business Days Before You Dig
IT'S THE LAW

## UTILITY NOTES

1. THE LOCATIONS OF UTILITIES SHOWN WITHIN THESE PLANS ARE APPROXIMATE ONLY. EXACT LOCATIONS SHALL BE DETERMINED IN THE FIELD BY CONTACTING THE UTILITY COMPANIES INVOLVED. NOTIFICATION BY CALLING THE TENNESSEE ONE CALL SYSTEM, INC., AT 1-800-351-1111 AS REQUIRED BY TCA 65-31-106 WILL BE REQUIRED.

2. THE CONTRACTOR WILL PROVIDE ALL NECESSARY PROTECTIVE MEASURES TO SAFEGUARD EXISTING UTILITIES FROM DAMAGE DURING CONSTRUCTION OF THIS PROJECT. IN THE EVENT THAT SPECIAL EQUIPMENT IS REQUIRED TO WORK OVER AND AROUND THE UTILITIES, THE CONTRACTOR WILL BE REQUIRED TO FURNISH SUCH EQUIPMENT. THE COST OF PROTECTING UTILITIES FROM DAMAGE AND FURNISHING SPECIAL EQUIPMENT WILL BE INCLUDED IN THE PRICE BID FOR OTHER ITEMS OF CONSTRUCTION.

3. PRIOR TO SUBMITTING HIS BID, THE CONTRACTOR WILL BE SOLELY RESPONSIBLE FOR CONTACTING OWNERS OF ALL AFFECTED UTILITIES IN ORDER TO DETERMINE THE EXTENT TO WHICH UTILITY RELOCATIONS AND/OR ADJUSTMENTS WILL HAVE UPON THE SCHEDULE OF WORK FOR THE PROJECT. WHILE SOME WORK MAY BE REQUIRED "AROUND" UTILITY FACILITIES THAT WILL REMAIN IN PLACE, OTHER UTILITY FACILITIES MAY NEED TO BE ADJUSTED CONCURRENTLY WITH THE CONTRACTOR'S OPERATIONS. ADVANCE CLEAR CUTTING MAY BE REQUIRED BY THE ENGINEER AT ANY LOCATION WHERE CLEARING IS CALLED FOR IN THE SPECIFICATIONS AND CLEAR CUTTING IS NECESSARY FOR A UTILITY RELOCATION. ANY ADDITIONAL COST WILL BE INCLUDED IN THE UNIT PRICE BID FOR THE CLEARING ITEM SPECIFIED IN THE PLANS.

4. THE CONTRACTOR SHALL NOTIFY EACH INDIVIDUAL UTILITY OWNER OF HIS PLAN OF OPERATION IN THE AREA OF THE UTILITIES. PRIOR TO COMMENCING WORK, THE CONTRACTOR SHALL CONTACT THE UTILITY OWNERS AND REQUEST THEM TO PROPERLY LOCATE THEIR RESPECTIVE UTILITY ON THE GROUND. THIS NOTIFICATION SHALL BE GIVEN AT LEAST THREE (3) BUSINESS DAYS PRIOR TO COMMENCEMENT OF OPERATIONS AROUND THE UTILITY IN ACCORDANCE WITH TCA 65-31-106.

5. UNLESS OTHERWISE NOTED, ALL UTILITY ADJUSTMENTS WILL BE PERFORMED BY THE UTILITY OR ITS REPRESENTATIVE. THE CONTRACTOR AND UTILITY OWNERS WILL BE REQUIRED TO CO-OPERATE WITH EACH OTHER IN ORDER TO EXPEDITE THE WORK REQUIRED BY THIS CONTRACT. ON CONTRACTS WHERE CONSTRUCTION STAKES, LINES, AND GRADES ARE CONTRACT ITEMS, THE CONTRACTOR WILL BE REQUIRED TO PROVIDE RIGHT-OF-WAY OR SLOPE STAKES, DITCH OR STREAM BED GRADES, OR OTHER ESSENTIAL SURVEY STAKING TO PREVENT CONFLICTS WITH THE HIGHWAY CONSTRUCTION. FREQUENTLY, THIS WILL BE REQUIRED AS THE FIRST ITEM OF WORK AND AT ANY LOCATION ON THE PROJECT DIRECTED BY THE ENGINEER.

UNOFFICIAL SET

NOT FOR BIDDING

STATE OF TENNESSEE
DEPARTMENT OF TRANSPORTATION

# UTILITIES

STA. 8+50 TO STA. 12+15

SCALE: 1"= 20'

8/5/2014 2:05:15 PM
P:\2807118\T\SUSR25005.sht

| TYPE | YEAR | PROJECT NO. | SHEET NO. |
|---|---|---|---|
| MAINT. | 2014 | 83005-4246-04 | 6 |
| | | | |
| | | | |
| | | | |

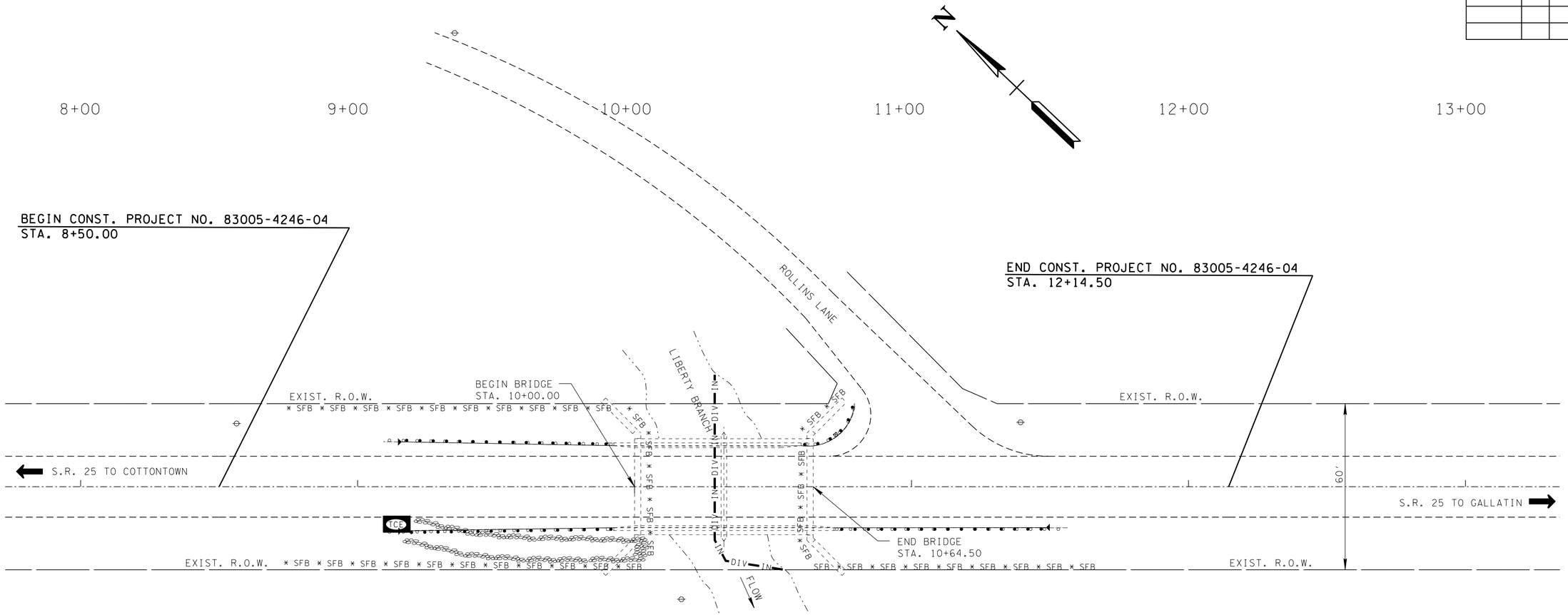


* NOTE: STATIONS ARE BASED OFF AN ASSUMED STATION OF 10+00.00 AT THE EXISTING BEGINNING OF BRIDGE.

DENOTES: PROPOSED HAUL ROAD (IF REQ'D)

A)

| EROSION PREVENTION AND SEDIMENT CONTROL LEGEND | | |
|---|---|---|
| SYMBOL | ITEM | STD. DWG. |
| IN DIV | INSTREAM DIVERSION | EC-STR-30<br>EC-STR-30A |
| SFB SFB SFB | SILT FENCE WITH WIRE BACKING | EC-STR-3C |
| SFB SFB SFB SFB | SEDIMENT FILTER BAG | EC-STR-2 |
| B) TCE | TEMPORARY CONSTRUCTION EXIT | EC-STR-25 |

NOTES:

A) ALL QUANTITIES TO BE USED AT THE DISCRETION OF THE ENGINEER.

B) TO BE LOCATED AS DIRECTED BY THE ENGINEER.

UNOFFICIAL SET

NOT FOR BIDDING

STATE OF TENNESSEE
DEPARTMENT OF TRANSPORTATION

# EROSION PREVENTION AND SEDIMENT CONTROL PLAN

STA.8+50 TO STA. 12+15

SCALE: 1"= 20'

8/5/2014 2:05:15 PM
P:\2807118\t\SUSR25006.sht

| TYPE | YEAR | PROJECT NO. | SHEET NO. |
|---|---|---|---|
| MAINT. | 2014 | 83005-4246-04 | 6A |
| | | | |
| | | | |
| | | | |

# EROSION PREVENTION AND SEDIMENT CONTROL SPECIAL NOTES

## NPDES

(1) THE EPSC MEASURES AND/OR PLAN SHALL BE MODIFIED AS NECESSARY SO THAT THEY ARE EFFECTIVE AT ALL TIMES THROUGHOUT THE COURSE OF THE PROJECT.

(2) PERMANENT EPSC MEASURES SHALL BE INITIATED WITHIN 14 CALENDAR DAYS AFTER FINAL GRADING OF ANY SEQUENCE OR PHASE. TEMPORARY OR PERMANENT STABILIZATION SHALL BE INITIATED WITHIN 14 CALENDAR DAYS AFTER FINAL GRADING OR WHEN CONSTRUCTION ACTIVITIES ON A PORTION OF THE SITE ARE TEMPORARILY CEASED AND EARTH DISTURBING ACTIVITIES WILL NOT RESUME UNTIL AFTER 14 CALENDAR DAYS. PERMANENT STABILIZATION WITH PERENNIAL VEGETATION OR OTHER PERMANENTLY STABLE NON-ERODING SURFACE SHALL REPLACE ANY TEMPORARY MEASURES AS SOON AS PRACTICABLE. UNPACKED GRAVEL CONTAINING FINES (SILT AND CLAY SIZED PARTICLES) OR CRUSHER RUNS WILL NOT BE CONSIDERED A NON-ERODIBLE SURFACE.

## EXCAVATION- CLEARING

(3) EXCEPT AS OTHERWISE SPECIFIED, THERE ARE NO KNOWN SPECIAL ENVIRONMENTAL FACTORS PRESENT ON THIS PROJECT THAT INDICATE A NEED FOR SEASONAL LIMITATIONS ON THE CLEARING, GRUBBING, EXCAVATION, GRADING, CUTTING OR FILLING OPERATIONS OR ON THE TOTAL AREA OF EXPOSED SOIL.

## UTILITY RELOCATION

(4) RAIN WATER WHICH COLLECTS IN THE UTILITY TRENCH SHALL BE PUMPED INTO A TEMPORARY DEWATERING STRUCTURE OR SEDIMENT FILTER BAG AND MAINTAINED.

(5) SILT FENCE SHALL BE INSTALLED ON THE DOWNSTREAM SIDE OF STOCKPILED SOIL. TRENCHING ACROSS WET WEATHER CONVEYANCES SHALL BE DONE DURING NO FLOW CONDITIONS AND STABILIZED BY THE END OF THE WORK DAY.

(6) UTILITY CROSSINGS FOR PERENNIAL STREAMS SHALL BE CONSTRUCTED IN ACCORDANCE WITH TDOT STANDARDS AND NO WORK SHALL BE CONDUCTED IN FLOWING WATERS. TENNESSEE DEPARTMENT OF ENVIRONMENT AND CONSERVATION (TDEC) REGULATIONS APPLY TO UTILITIES IN THIS PROJECT IN REGARD TO EROSION PREVENTION AND SEDIMENT CONTROL (EPSC). THE STATE CONTRACTOR SHALL COMPLY WITH ALL REQUIREMENTS OF THE STORM WATER POLLUTION PREVENTION PLANS (SWPPP).

(7) IT IS THE RESPONSIBILITY OF THE STATE UTILITY CONTRACTOR INSTALLER TO PROTECT FROM EROSION EXPOSED EARTH RESULTING FROM THEIR OPERATIONS AND TO PROVIDE FOR CONTAINMENT OF SEDIMENT THAT MAY RESULT FROM THEIR WORK. PRIOR TO BEGINNING WORK, ADEQUATE MEASURES MUST BE IN PLACE TO TRAP ANY SEDIMENT THAT MAY TRAVEL OFF-SITE IN THE EVENT OF RAIN. DURING THE PROGRESSION OF THEIR WORK, EXPOSED EARTH AREAS SHALL BE STABILIZED AS SOON AS POSSIBLE TO PREVENT EROSION. AT NO TIME SHALL EXPOSED EARTH RESULTING FROM THEIR OPERATIONS HAVE UNPROTECTED ACCESS TO FLOWING OFF-SITE AND ENTERING WATERS OF THE STATE/U.S.

(8) FOR THE INSTALLATION OF BURIED UTILITIES (PIPES AND CABLES), **TRENCHES SHALL BE BACKFILLED DAILY** AS CONSTRUCTION PROCEEDS. BACKFILLED TRENCHES SHALL BE SEEDED AND MULCHED OR SODDED DAILY IF POSSIBLE, BUT NO LATER THAN SEVEN DAYS AFTER BEING BACKFILLED. ANY TEMPORARY SPOIL OF EXCAVATED EARTH SHALL BE LOCATED WITHIN TDOT EROSION PREVENTION AND SEDIMENT CONTROL (EPSC) MEASURES OR RECEIVE SEPARATE EPSC MEASURES. IF TRENCHES ARE NOT BACKFILLED OVERNIGHT, APPROPRIATE EPSC MEASURES WILL BE INSTALLED BY THE STATE UTILITY CONTRACTOR UNTIL SUCH TIME AS THE TRENCH IS BACKFILLED.

(9) IN REGARD TO EROSION PREVENTION AND SEDIMENT CONTROL (EPSC), TENNESSEE DEPARTMENT OF ENVIRONMENT AND CONSERVATION (TDEC) REGULATIONS APPLY TO THE STATE UTILITY CONTRACTORS IN THIS PROJECT, THEREFORE, THE STATE CONTRACTOR SHALL COMPLY WITH ALL REQUIREMENTS OF THE STORM WATER POLLUTIONS PREVENTION PLANS (SWPPP). THE STATE CONTRACTOR IS RESPONSIBLE FOR EPSC MEASURES RELATED TO UTILITY CONSTRUCTION INCLUDED IN THE STATE CONTRACT WORK.

(10) TRENCHES FORMED FOR THE INSTALLATION OF BURIED UTILITIES MAY CAUSE STORM WATER RUNOFF TO CONCENTRATE AT THE TRENCH LINE. ADDITIONAL EROSION PREVENTION AND SEDIMENT CONTROL (EPSC) MEASURES MAY BE REQUIRED TO BE INSTALLED AS APPROVED BY THE TDOT PROJECT ENGINEER.

(11) FOR THE INSTALLATION OF UNDERGROUND UTILITIES OUTSIDE OF THE TDOT RIGHT-OF-WAY, TEMPORARY EROSION PREVENTION AND SEDIMENT CONTROL (EPSC) SHALL BE INSTALLED PRIOR TO CLEARING (TRENCHING AND ASSOCIATED BLASTING) IN THOSE AREAS NECESSARY TO PREVENT SEDIMENT FROM LEAVING THE CONSTRUCTION AREA. THESE EPSC MEASURES SHALL REMAIN UNTIL THE BACKFILLED TRENCH IS STABILIZED WITH FINAL VEGETATIVE COVER.

(12) THE UTILITY CONTRACTOR SHALL RESTORE ALL AFFECTED WET WEATHER CONVEYANCES TO THE EXISTING TOPOGRAPHIC CONDITIONS (AS APPROVED BY THE TDOT PROJECT ENGINEER).

(13) THE UTILITY CONTRACTOR WILL PROVIDE APPROPRIATE EROSION PREVENTION AND SEDIMENT CONTROL (EPSC) MEASURES TO REPLACE IN-PLACE EPSC MEASURES REMOVED TO FACILITATE THE INSTALLATION OF UTILITIES. REPLACEMENT OF EPSC MEASURES WILL BE COORDINATED WITH THE TDOT PROJECT ENGINEER BEFORE COMMENCING WORK.

(14) SEDIMENT REMOVED FROM SEDIMENT CONTROL STRUCTURES SHALL BE PLACED AND BE TREATED IN A MANNER SO THAT THE SEDIMENT IS CONTAINED WITHIN THE PROJECT LIMITS AND DOES NOT MIGRATE INTO WATERS OF THE STATE/U.S. COST FOR THIS TREATMENT IS TO BE INCLUDED IN PRICE BID FOR ITEM NO. 209-05 SEDIMENT REMOVAL, C.Y

(15) ON CONTRACTS WHERE CONSTRUCTION STAKES, LINES AND GRADES ARE A CONTRACT ITEM, THE CONTRACTOR WILL BE REQUIRED TO PROVIDE RIGHT- OF-WAY OR SLOPE STAKES, DITCH OR STREAM BED GRADES, OR OTHER ESSENTIAL SURVEY STAKING TO PREVENT CONFLICTS WITH THE HIGHWAY CONSTRUCTION. FREQUENTLY THIS WILL BE REQUIRED AS THE FIRST ITEM OF WORK AND AT ANY LOCATION ON THE PROJECT DIRECTED BY THE ENGINEER.

## EROSION PREVENTION AND SEDIMENT CONTROL LEGEND

| SYMBOL | ITEM | STD. DWG. |
|---|---|---|
| IN DIV | INSTREAM DIVERSION | EC-STR-30<br>EC-STR-30A |
| SFB SFB SFB | SILT FENCE WITH WIRE BACKING | EC-STR-3C |
| SFB SFB SFB SFB | SEDIMENT FILTER BAG | EC-STR-2 |
| TCE | TEMPORARY CONSTRUCTION EXIT | EC-STR-25 |

NOTES:

1) TO BE LOCATED AS DIRECTED BY THE ENGINEER.

2) ALL QUANTITIES TO BE USED AT THE DISCRETION OF THE ENGINEER.

## EROSION PREVENTION AND SEDIMENT CONTROL QUANTITIES

| | ITEM NO. | DESCRIPTION | UNIT | QTY. |
|---|---|---|---|---|
| | 209-05 | SEDIMENT REMOVAL | C.Y. | 25 |
| (1) | 209-08.02 | TEMPORARY SILT FENCE (WITH BACKING) | L.F. | 600 |
| | 209-09.04 | SEDIMENT FILTER BAG(15' X 10') | EACH | 1 |
| | 209-65.04 | TEMPORARY IN STREAM DIVERSION | L.F. | 100 |
| (2) | 303-10.01 | MINERAL AGGREGATE (SIZE 57) | TON | 33 |
| | 709-05.05 | MACHINED RIP-RAP (CLASS A-3) | TON | 40 |
| (3) | 740-10.03 | GEOTEXTILE (TYPE III)(EROSION CONTROL) | S.Y. | 80 |
| | | | | |

(1) INCLUDES 100 L.F. FOR TEMPORARY SEDIMENT FILTER BAG

(2) INCLUDES 33 TONS FOR TEMPORARY SEDIMENT FILTER BAG

(3) INCLUDES 80 S.Y. FOR TEMPORARY SEDIMENT FILTER BAG

UNOFFICIAL SET

NOT FOR BIDDING

STATE OF TENNESSEE
DEPARTMENT OF TRANSPORTATION

EROSION PREVENTION AND SEDIMENT CONTROL NOTES

8/5/2014 2:05:16 PM
P:\2807118\1\SUSR25006a.sht

| CONST. NO. | | |
|---|---|---|
| PROJECT NO. | YEAR | SHEET NO. |
| 83005-4246-04 | 2014 | |

REVISIONS

| NO. | DATE | BY | BRIEF DESCRIPTION |
|---|---|---|---|
| | | | |

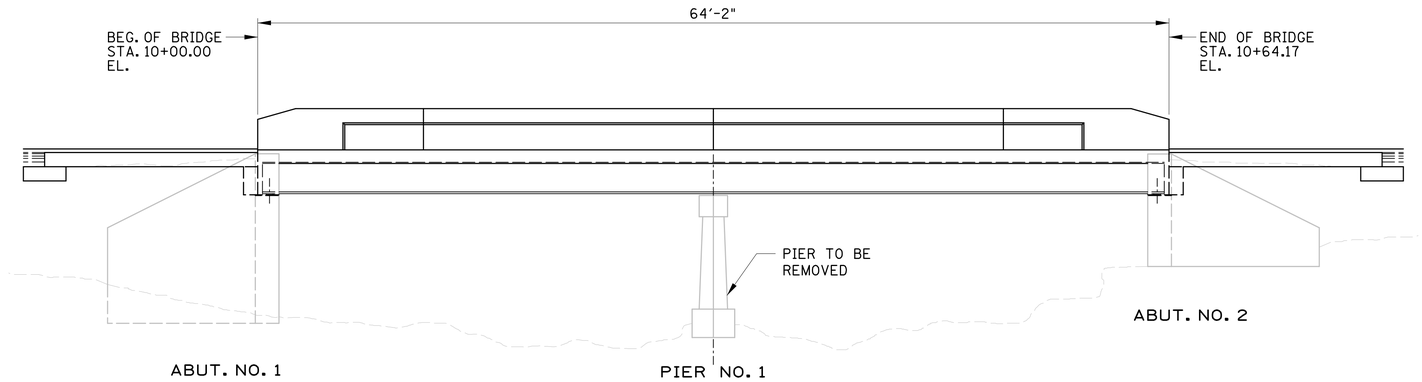


ELEVATION

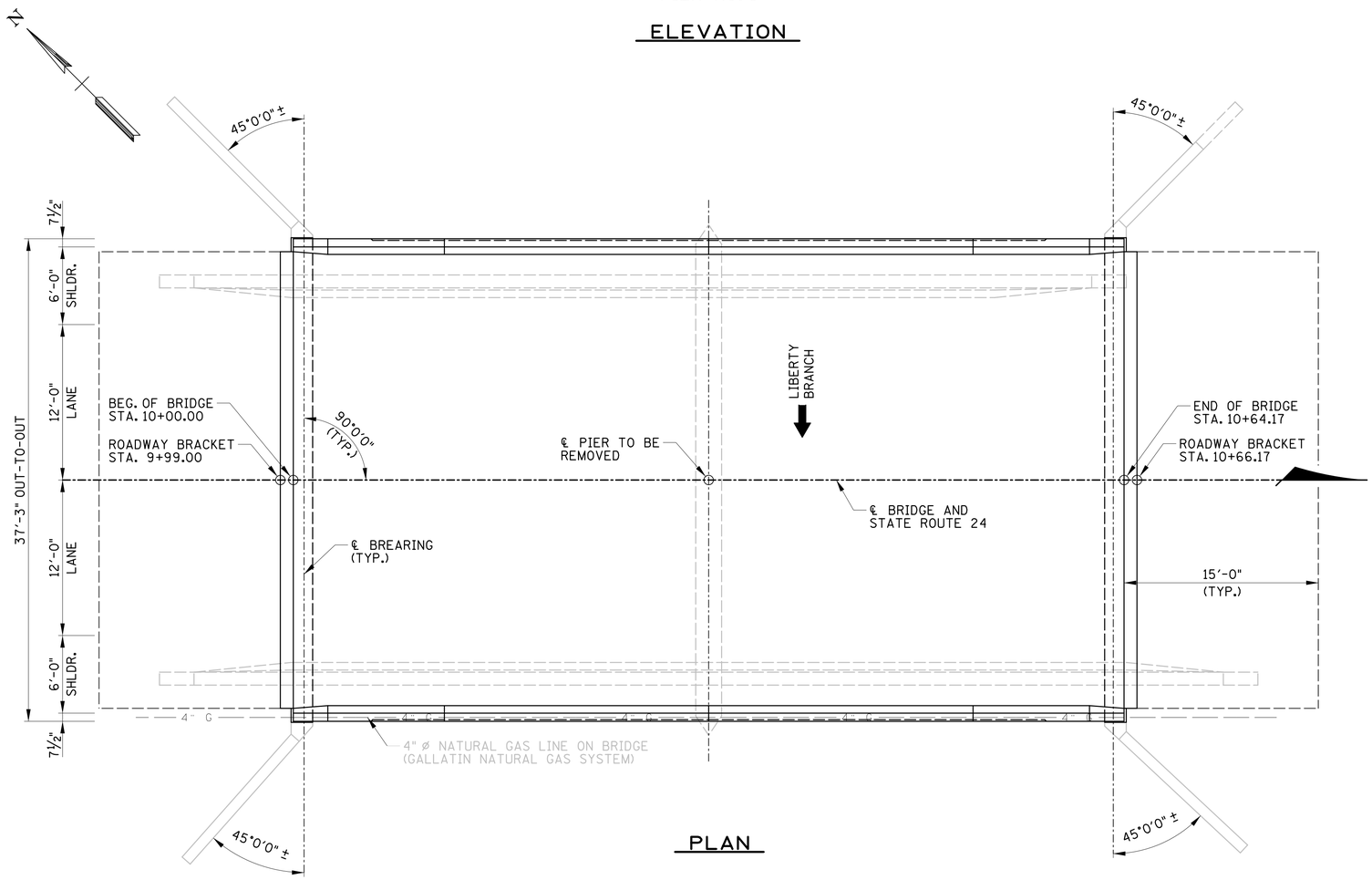


PLAN

## SCOPE OF WORK – ALT. "A"

1) PLACE TRAFFIC CONTROL TO PERFORM INITIAL WORK ON BRIDGE & APPROACHES.
2) COMPLETE ROADWAY APPROACH WIDENING DURING OFF-PEAK HOURS. USE OF ONE-LANE CLOSURE WITH FLAGMAN WILL BE ALLOWED WITH APPROVAL OF THE ENGINEER.
3) PERFORM ABUTMENT MODIFICATIONS AND REPAIRS.
4) INSTALL NEW SUPERSTRUCTURE UNITS, CLOSURE POURS AND PRECAST APPROACH SLABS DURING WEEKEND ROADWAY CLOSURE.
5) PLACE NEW CONCRETE PARAPETS ON BOTH SIDES OF THE BRIDGE. THIS WORK MAY BE COMPLETED AS PART OF THE SUPERSTRUCTURE UNIT CONSTRUCTION OR AFTER THE UNITS ARE IN-PLACE.
6) INSTALL NEW DECK SEAL AND ASPHALT OVERLAY ON DECK AND APPROACH SLABS.
7) TEXTURE COAT ALL EXPOSED CONCRETE SURFACES.

## LIST OF BRIDGE DRAWINGS

| DWG. NO. | CURRENT REV. DATE | TITLE |
|---|---|---|
| BR-117-142 | | ESTIMATED BRIDGE QUANTITIES |
| BR-117-143 | | BRIDGE GENERAL NOTES SHEET 1 OF 2 |
| BR-117-144 | | BRIDGE GENERAL NOTES SHEET 2 OF 2 |
| BR-117-145 | | LAYOUT OF BRIDGE TO BE REPAIRED - ALT "A" |
| BR-117-146 | | SUPERSTRUCTURE |
| BR-117-147 | | SUPERSTRUCTURE DETAILS |
| BR-117-148 | | SUPERSTRUCTURE DETAILS |
| BR-117-149 | | SUPERSTRUCTURE DETAILS |
| BR-117-150 | | PAVEMENT AT BRIDGE ENDS - 1 OF 3 |
| BR-117-151 | | PAVEMENT AT BRIDGE ENDS - 2 OF 3 |
| BR-117-152 | | PAVEMENT AT BRIDGE ENDS - 3 OF 3 |
| BR-117-153 | | ABUTMENT NO. 1 |
| BR-117-154 | | ABUTMENT NO. 2 |
| BR-117-155 | | EXISTING PIER DETAILS |
| BR-117-155A | | BILL OF STEEL |

## BRIDGE APPURTENANCES

| | | |
|---|---|---|
| STD-1-1SS | 7-31-00 | STANDARD CONCRETE BARRIER RAIL |
| STD-9-1 | 12-19-94 | REINFORCING BAR SUPPORT DETAILS FOR CONCRETE SLABS |
| STD-10-1 | 04-08-05 | MISCELLANEOUS ABUTMENT AND DRAINAGE DETAILS |

UNOFFICIAL SET

NOT FOR BIDDING

ALT. "A"

STATE OF TENNESSEE
DEPARTMENT OF TRANSPORTATION
LAYOUT OF BRIDGE
TO BE REPAIRED
STATE ROUTE 25
OVER
LIBERTY BRANCH
BR. NO. 83-SR25-10.89
SUMNER COUNTY
2014

P.I.N. NO. 120026.00

| | | | |
|---|---|---|---|
| DESIGNED BY | GRESHAM SMITH & PARTNERS | DATE | 5/2014 |
| DRAWN BY | R. PALMER | DATE | 5/2014 |
| SUPERVISED BY | T. KNIAZEWYCZ | DATE | 5/2014 |
| CHECKED BY | T. KNIAZEWYCZ | DATE | 6/2014 |

GRESHAM SMITH AND PARTNERS

gyoun
P:\2807118\b\AltA\8071b18gpl.sht
8/5/2014
$PRF$

| CONST. NO. | | |
|---|---|---|
| PROJECT NO. | YEAR | SHEET NO. |
| 83005-4246-04 | 2014 | |

REVISIONS

| NO. | DATE | BY | BRIEF DESCRIPTION |
|---|---|---|---|
| | | | |

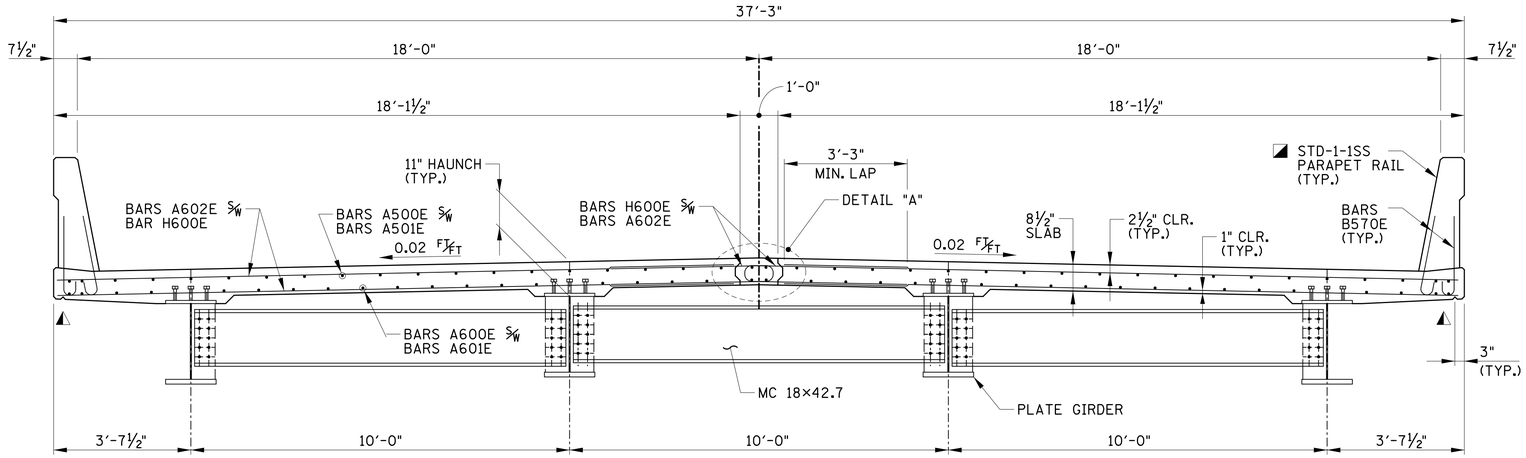


## TYPICAL CROSS-SECTION

◭ DENOTE: ¾" TRIANGULAR DRIP NOTCH TO RUN FULL LENGTH OF SLAB

◪ DENOTE: PARAPET MAY BE CAST PRIOR TO PLACEMENT OF SUPERSTRUCTURE UNIT.

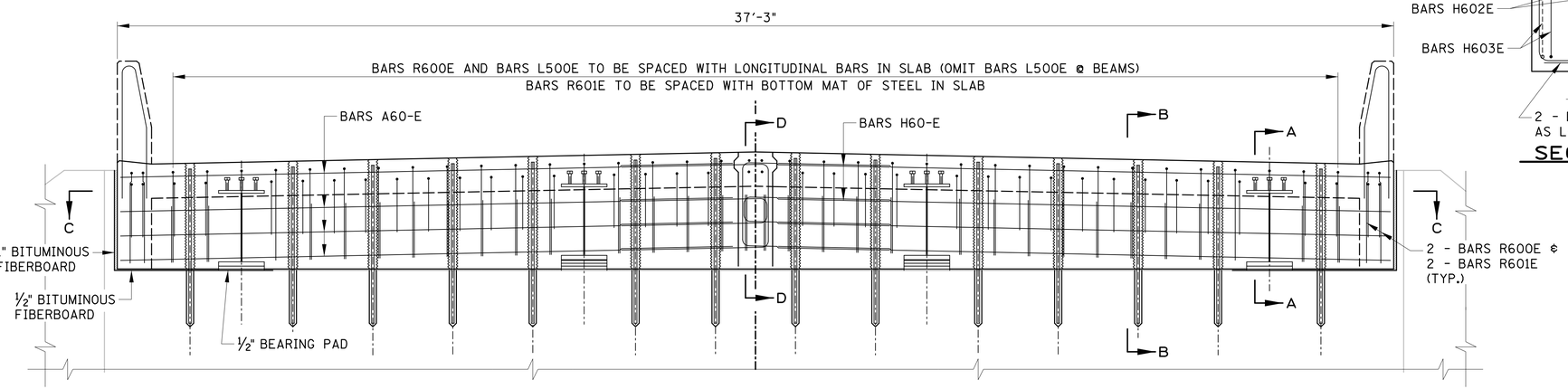


## CROSS-SECTION @ BEARING

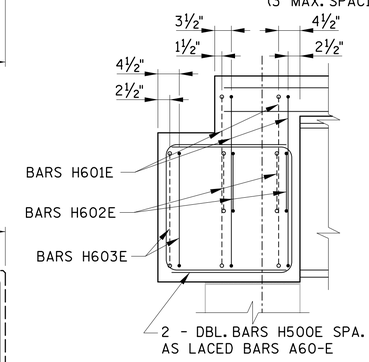


## SECTION D-D

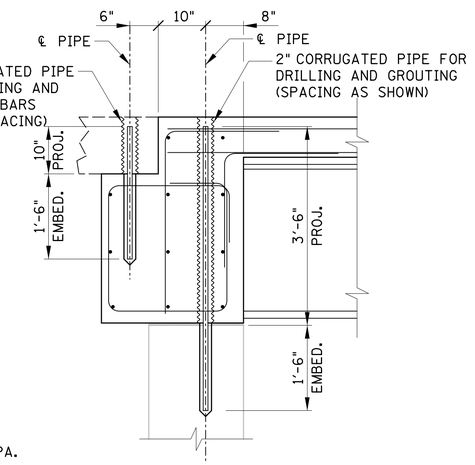


## SECTION B-B

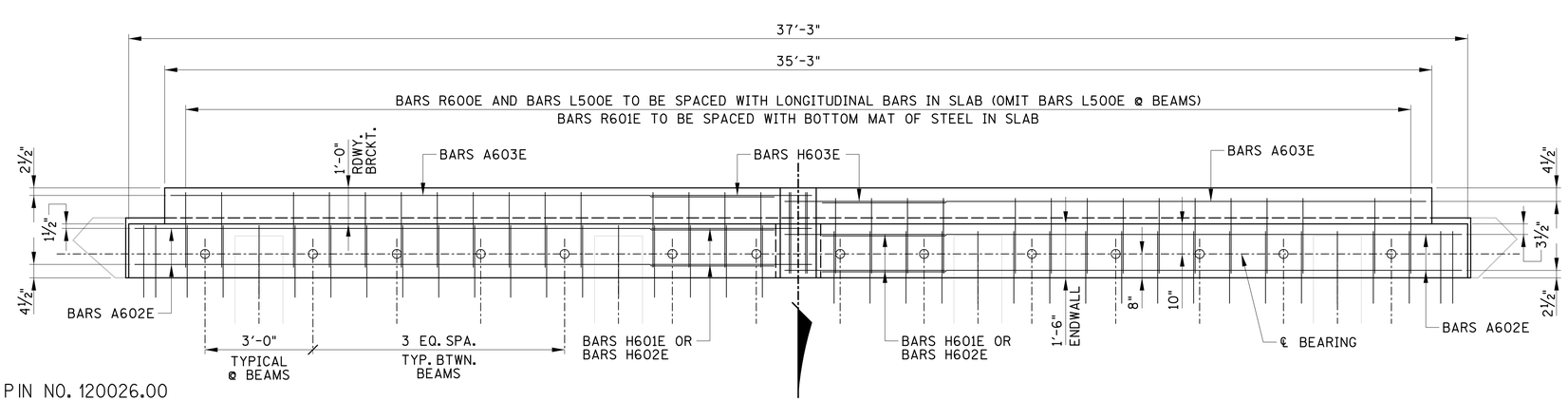


## SECTION C-C

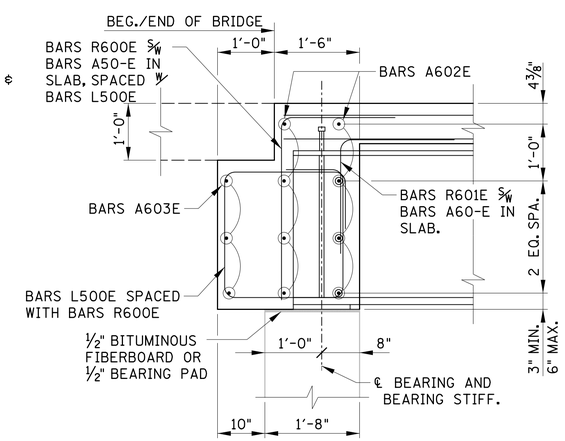


## SECTION A-A

UNOFFICIAL SET

NOT FOR BIDDING

ALT. "A"

STATE OF TENNESSEE
DEPARTMENT OF TRANSPORTATION

SUPERSTRUCTURE

STATE ROUTE 25
OVER
LIBERTY BRANCH
BR. NO. 83-SR25-10.89
SUMNER COUNTY
2014

PIN NO. 120026.00

DESIGNED BY GRESHAM SMITH & PARTNERS DATE 5/2014
DRAWN BY R. PALMER DATE 5/2014
SUPERVISED BY T. KNIAZEWYCZ DATE 5/2014
CHECKED BY T. KNIAZEWYCZ DATE 6/2014

GRESHAM SMITH AND PARTNERS

SEE SHEET BR-117-147 FOR ESTIMATED QUANTITIES



gyoun
P:\2807118\b\Alt A\8071b18gs1.sht
8/5/2014
$PRF$

| CONST. NO. | | |
|---|---|---|
| PROJECT NO. | YEAR | SHEET NO. |
| 83005-4246-04 | 2014 | |

REVISIONS

| NO. | DATE | BY | BRIEF DESCRIPTION |
|---|---|---|---|
| | | | |

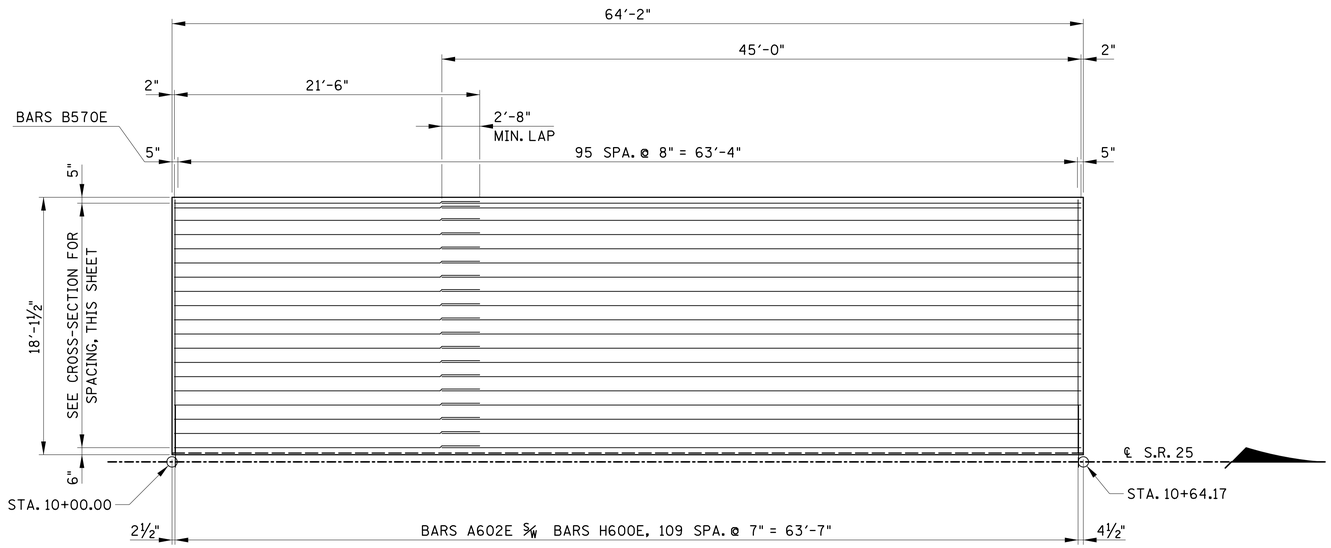


## UNIT A SLAB PLAN - TOP MAT

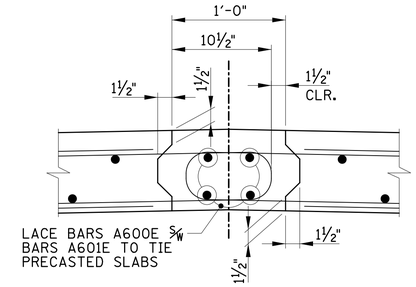


## DETAIL "A"

ONE (1) LAYER, 2'-0" WIDE STRIP OF DECK SEALANT (ITEM NO. 617-01) SHALL BE PLACED LONGITUDINALLY OVER CLOSURE POURS OF JOINT FOR THE FULL LENGTH OF THE BRIDGE BEFORE ENTIRE BRIDGE DECK IS COVERED WITH DECK SEALANT

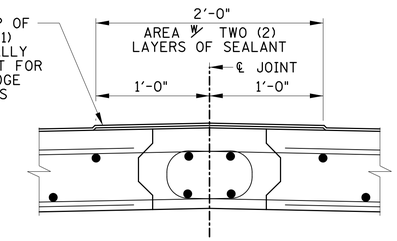


## ADDITIONAL BRIDGE DECK MEMBRANE DETAIL

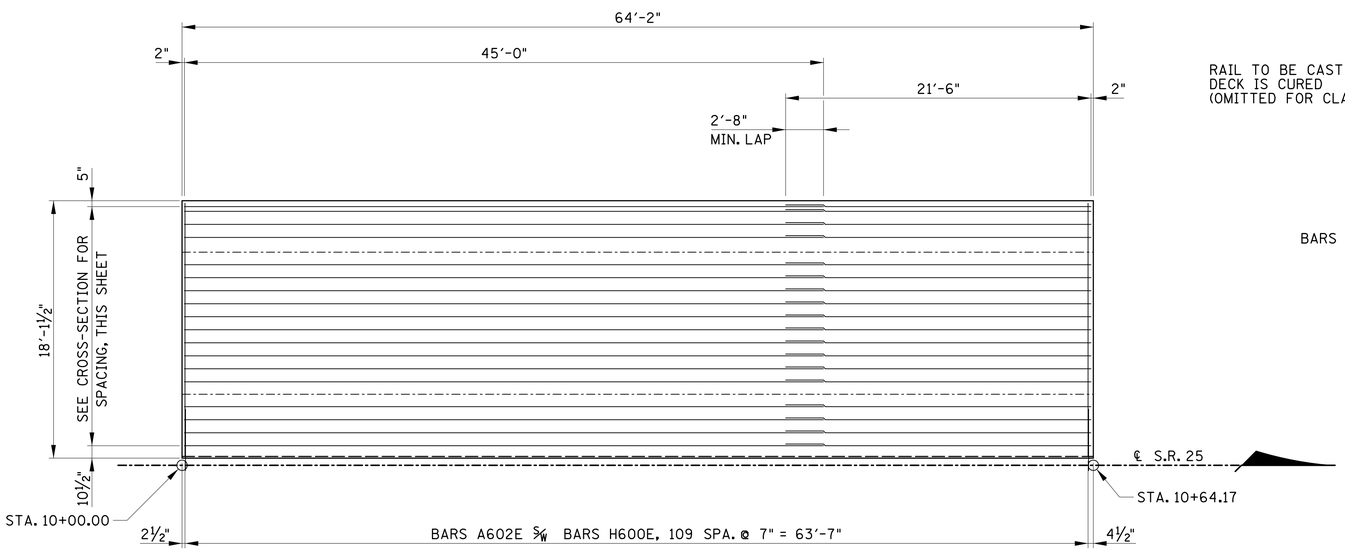


## UNIT A SLAB PLAN - BOTTOM MAT

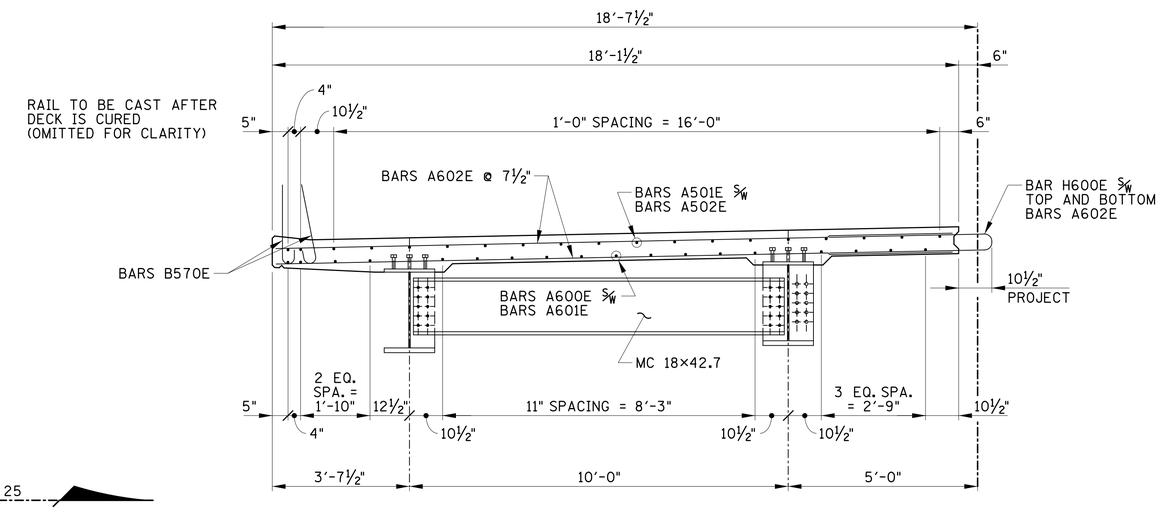


## SLAB SECTION

## ESTIMATED QUANTITIES

| CLASS "D" CONCRETE (BRIDGES) | REINFORCING STEEL (REPAIRS) |
|---|---|
| C.Y. | LB. |
| 65 | 25,582 |

UNOFFICIAL SET

NOT FOR BIDDING

ALT. "A"

STATE OF TENNESSEE
DEPARTMENT OF TRANSPORTATION

SUPERSTRUCTURE DETAILS

STATE ROUTE 25
OVER
LIBERTY BRANCH
BR. NO. 83-SR25-10.89
SUMNER COUNTY
2014

PIN NO. 120026.00

| | | | |
|---|---|---|---|
| DESIGNED BY | GRESHAM SMITH & PARTNERS | DATE | 5/2014 |
| DRAWN BY | R. PALMER | DATE | 5/2014 |
| SUPERVISED BY | T. KNIAZEWYCZ | DATE | 5/2014 |
| CHECKED BY | T. KNIAZEWYCZ | DATE | 6/2014 |

GS&P GRESHAM SMITH AND PARTNERS

gyoun
P:\2807118\b\Alt A\8071b18as2.sht
8/5/2014
$PRF$

| CONST. NO. | | |
|---|---|---|
| PROJECT NO. | YEAR | SHEET NO. |
| 83005-4246-04 | 2014 | |

REVISIONS

| NO. | DATE | BY | BRIEF DESCRIPTION |
|---|---|---|---|
| | | | |

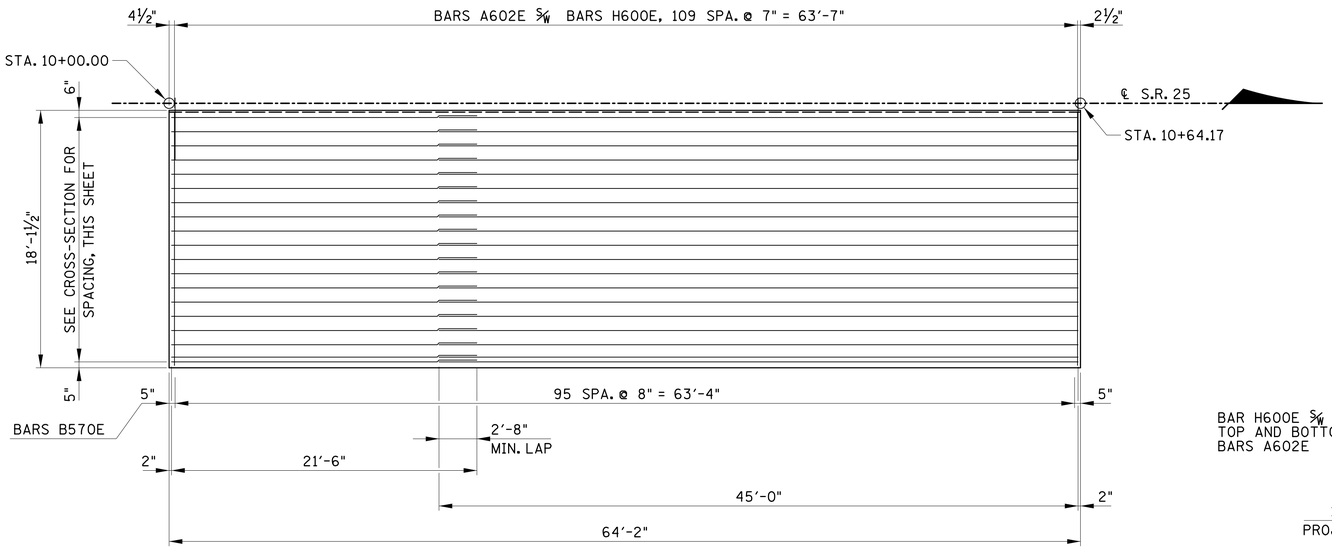


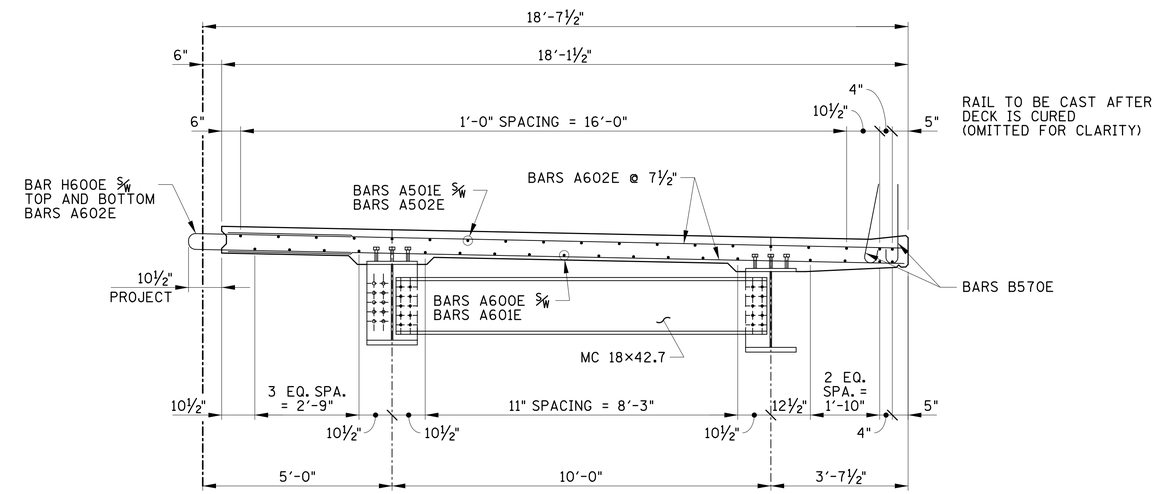


SLAB SECTION

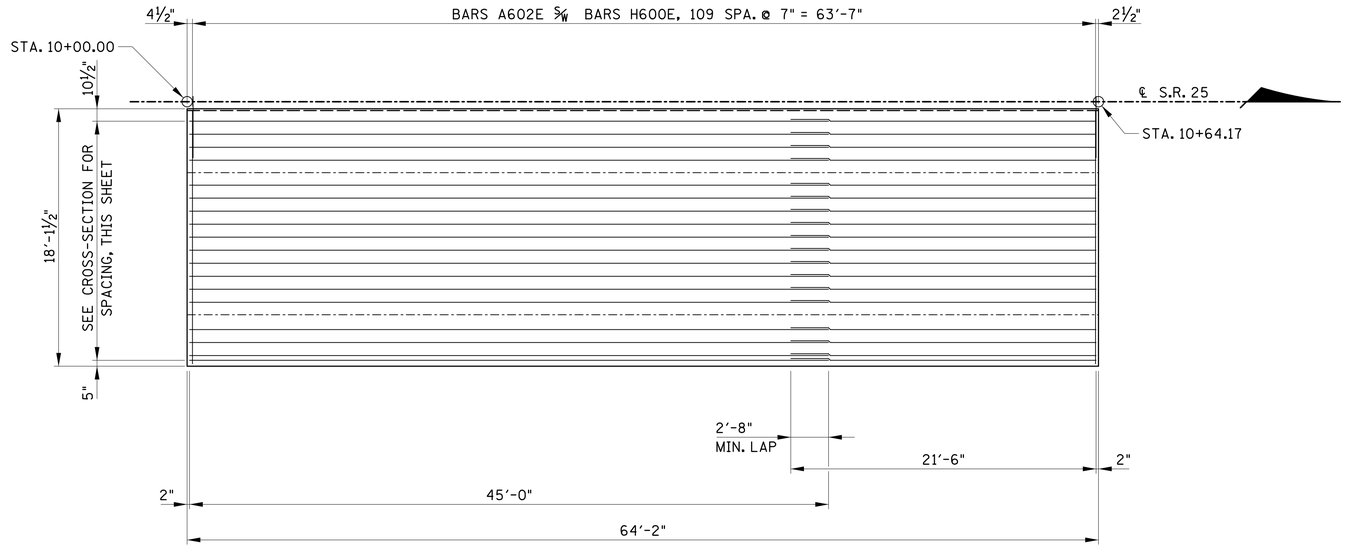


gyoun
P:\2807118\b\ALT-A\8071b18gs3.sht

8/5/2014
$PRF$

PIN NO. 120026.00

| | | | |
|---|---|---|---|
| DESIGNED BY | GRESHAM SMITH & PARTNERS | DATE | 5/2014 |
| DRAWN BY | R. PALMER | DATE | 5/2014 |
| SUPERVISED BY | T. KNIAZEWYCZ | DATE | 5/2014 |
| CHECKED BY | T. KNIAZEWYCZ | DATE | 6/2014 |

GRESHAM SMITH AND PARTNERS

UNOFFICIAL SET

NOT FOR BIDDING

SEE SHEET BR-117-147 FOR ESTIMATED QUANTITIES

ALT. "A"

STATE OF TENNESSEE
DEPARTMENT OF TRANSPORTATION

SUPERSTRUCTURE DETAILS

STATE ROUTE 25
OVER
LIBERTY BRANCH
BR. NO. 83-SR25-10.89
SUMNER COUNTY
2014

| CONST. NO. | | |
|---|---|---|
| PROJECT NO. | YEAR | SHEET NO. |
| 83005-4246-04 | 2014 | |

REVISIONS

| NO. | DATE | BY | BRIEF DESCRIPTION |
|---|---|---|---|
| | | | |

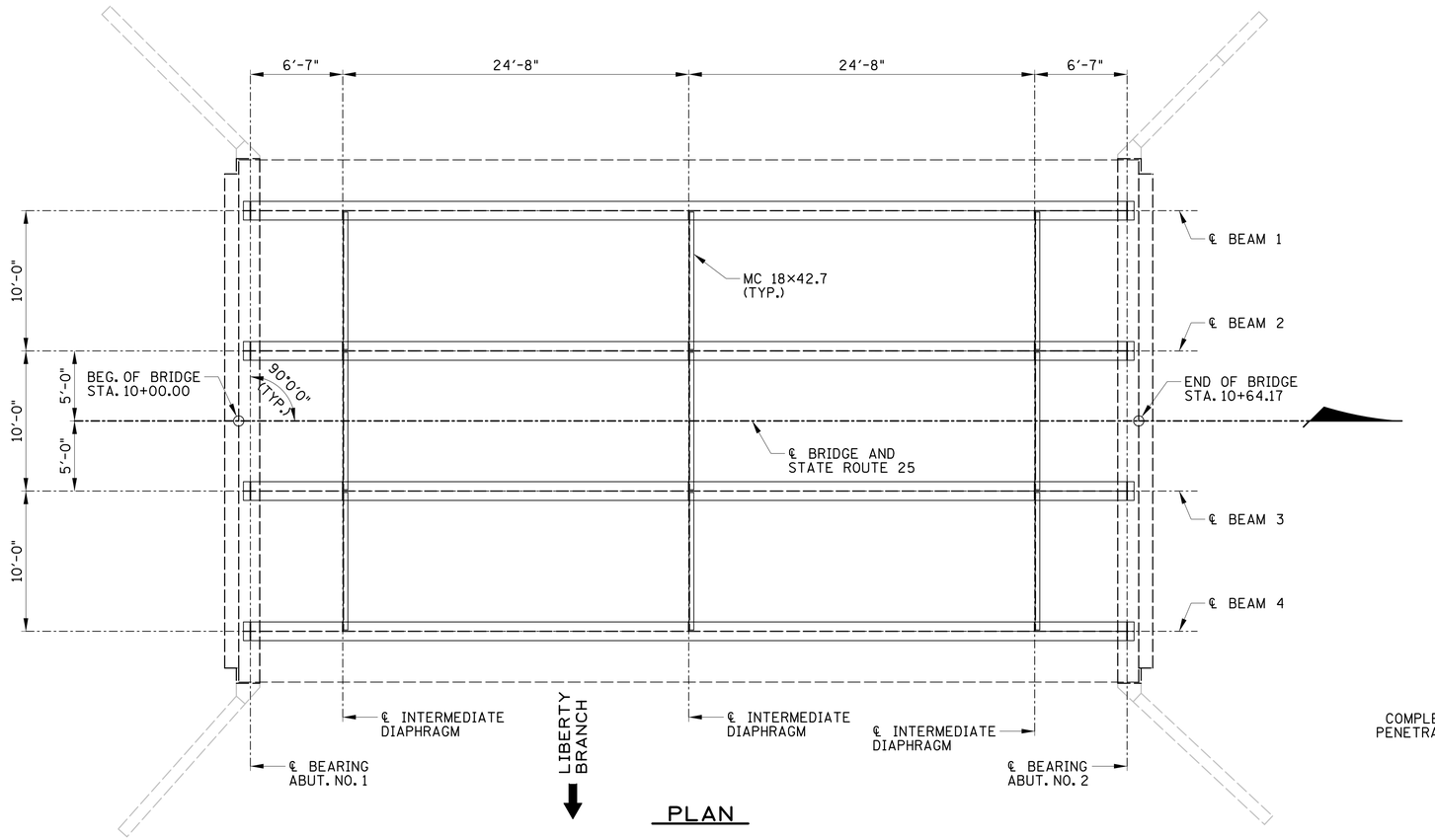


PLAN

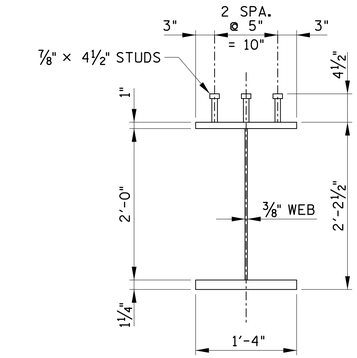


TYPICAL SECTION

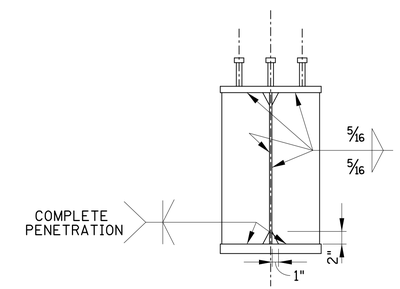


SECTION @ BEARING

1" × 7½" × 2'-0"
BEARING STIFFENERS

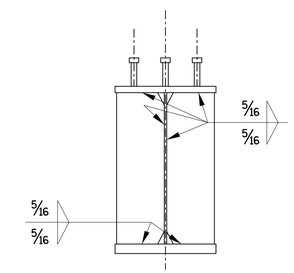


SECTION @ DIAPHRAGM

1" × 7½" × 2'-0"
DIAPHRAGM CONNECTOR

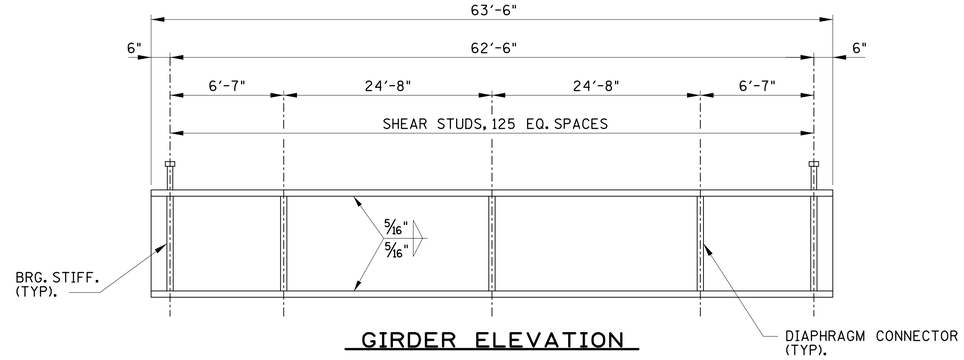


GIRDER ELEVATION

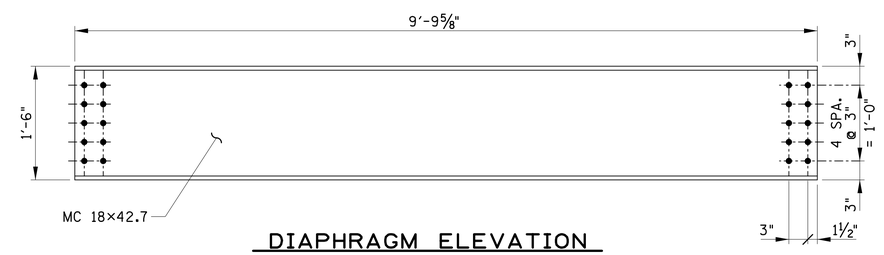


DIAPHRAGM ELEVATION

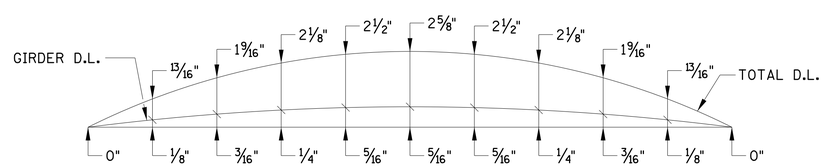


DEAD LOAD DEFLECTION

DEAD LOAD CORRECTION CURVE: GIRDERS SHALL BE CAMBERED TO COMPENSATE FOR DEAD LOAD DEFLECTION AND PROFILE GRADE.

UNOFFICIAL SET

NOT FOR BIDDING

ALT. "A"

STATE OF TENNESSEE
DEPARTMENT OF TRANSPORTATION

SUPERSTRUCTURE DETAILS

STATE ROUTE 25
OVER
LIBERTY BRANCH
BR. NO. 83-SR25-10.89
SUMNER COUNTY
2014

PIN NO. 120026.00

| | | | |
|---|---|---|---|
| DESIGNED BY | GRESHAM SMITH & PARTNERS | DATE | 5/2014 |
| DRAWN BY | R. PALMER | DATE | 5/2014 |
| SUPERVISED BY | T. KNIAZEWYCZ | DATE | 5/2014 |
| CHECKED BY | T. KNIAZEWYCZ | DATE | 6/2014 |

GRESHAM SMITH AND PARTNERS

gyoun
P:\2807118\b\AHA\8071b18as4.sht

8/5/2014
$PRF$

BR-117- 149

| CONST. NO. | | |
|---|---|---|
| PROJECT NO. | YEAR | SHEET NO. |
| 83005-4246-04 | 2014 | |

REVISIONS

| NO. | DATE | BY | BRIEF DESCRIPTION |
|---|---|---|---|
| | | | |

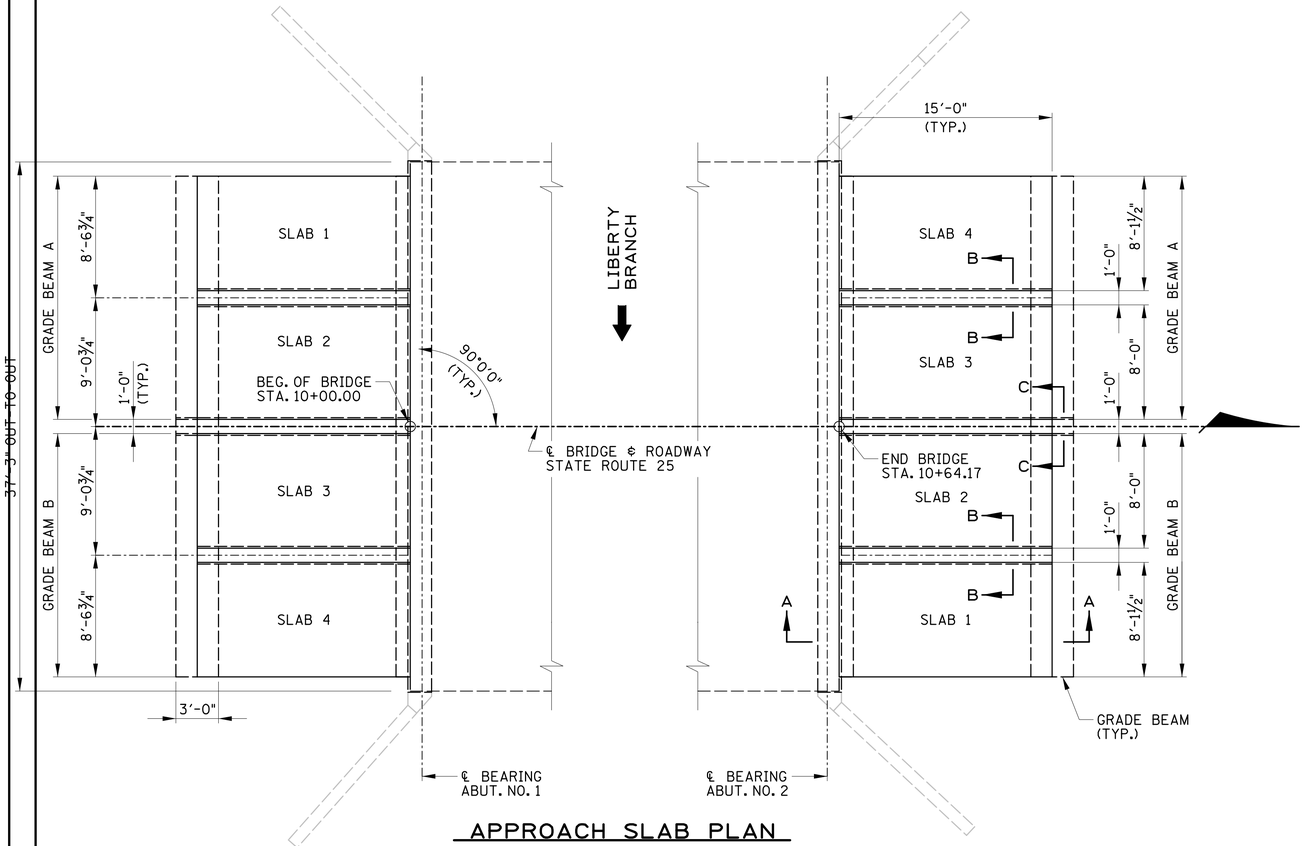


## APPROACH SLAB PLAN

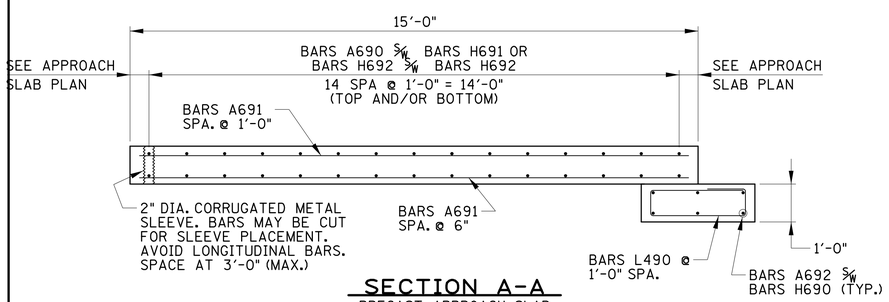


## SECTION A-A

PRECAST APPROACH SLAB

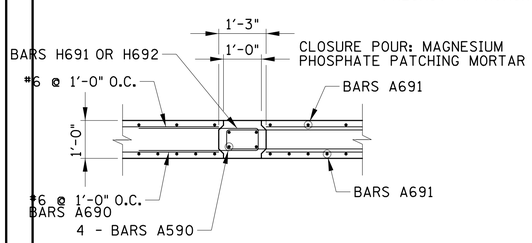


## SECTION B-B

ADJACENT APPROACH SLAB PANELS

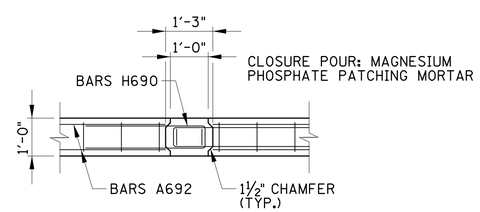


## SECTION C-C

AT GRADE BEAMS

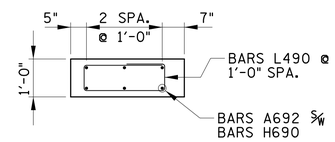


## SECTION D-D

@ GRADE BEAM A

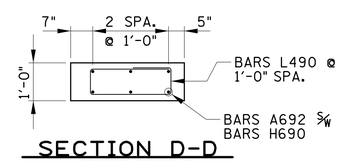


## SECTION D-D

@ GRADE BEAM B

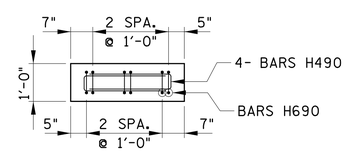


## CLOSURE POUR

@ GRADE BEAM

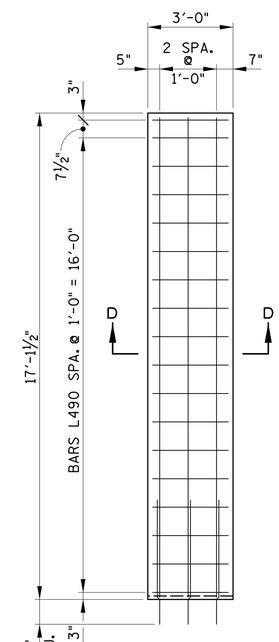


GRADE BEAM 'A'

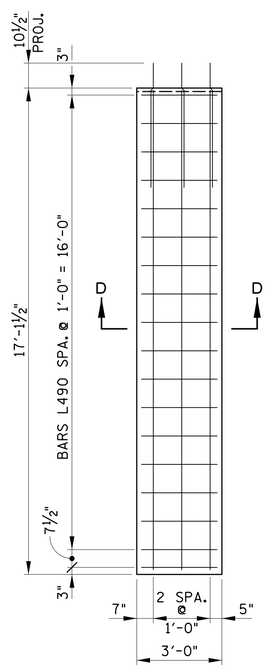


GRADE BEAM 'B'

UNOFFICIAL SET

NOT FOR BIDDING

ALT. "A"

STATE OF TENNESSEE
DEPARTMENT OF TRANSPORTATION

# PAVEMENT AT BRIDGE ENDS DETAILS
# STATE ROUTE 25 OVER LIBERTY BRANCH
# BR. NO. 83-SR25-10.89
# SUMNER COUNTY
# 2014

PIN NO. 120026.00

| | | | |
|---|---|---|---|
| DESIGNED BY | GRESHAM SMITH & PARTNERS | DATE | 5/2014 |
| DRAWN BY | R. PALMER | DATE | 5/2014 |
| SUPERVISED BY | T. KNIAZEWYCZ | DATE | 5/2014 |
| CHECKED BY | T. KNIAZEWYCZ | DATE | 6/2014 |

GRESHAM SMITH AND PARTNERS

gyoun
P:\2807118\b\AltA\8071b18gs5.sht
8/5/2014
$PRF$

BR-117- 150

CONST. NO. _____

| PROJECT NO. | YEAR | SHEET NO. |
|---|---|---|
| 83005-4246-04 | 2014 | |

REVISIONS

| NO. | DATE | BY | BRIEF DESCRIPTION |
|---|---|---|---|
| | | | |

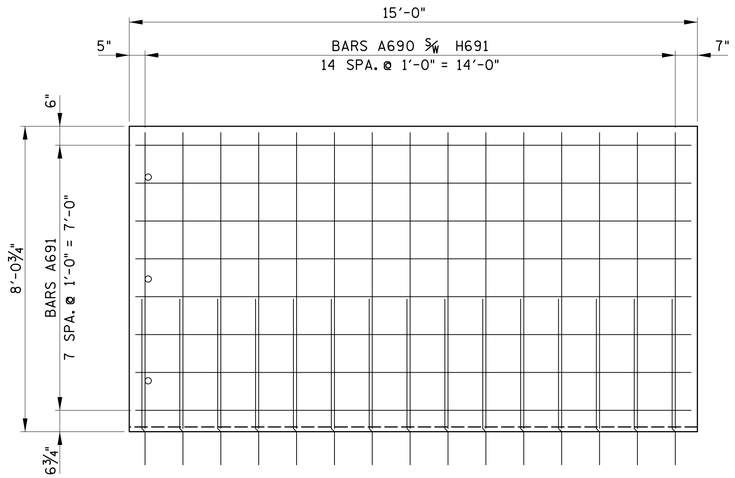


EXTERIOR APPROACH SLAB PANEL 1

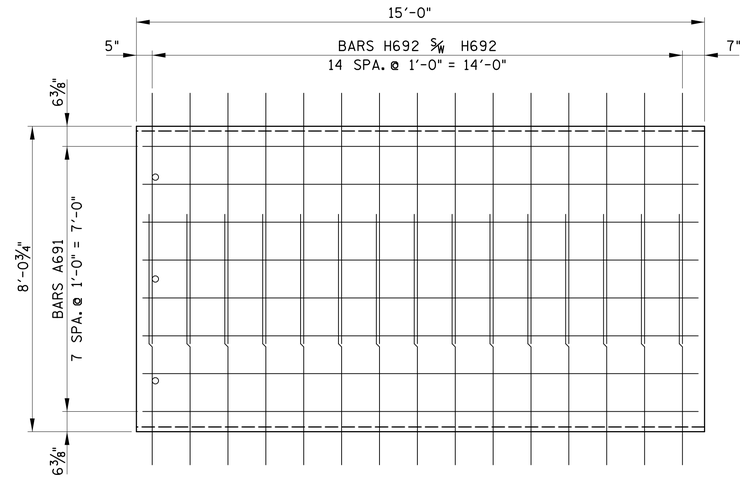


INTERIOR APPROACH SLAB PANEL 3

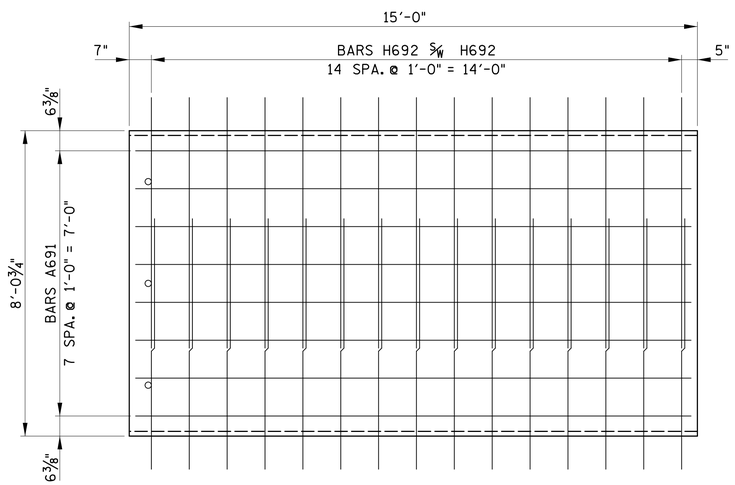


INTERIOR APPROACH SLAB PANEL 2

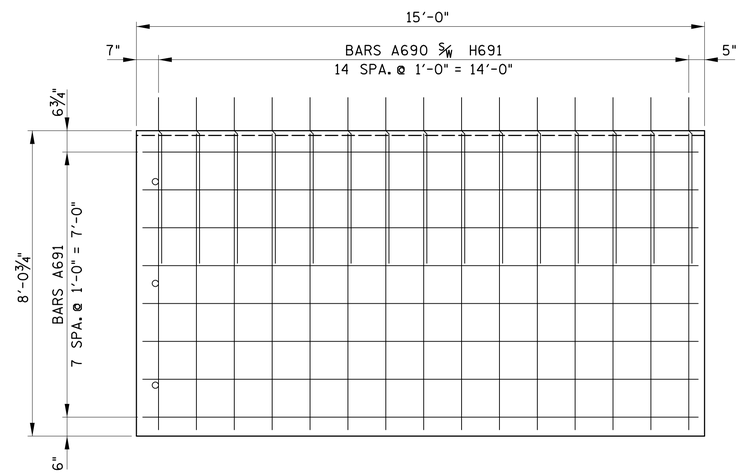


EXTERIOR APPROACH SLAB PANEL 4

○ SEE SECTION A-A ON SHEET BR-117-150
FOR CORRUGATED METAL SLEEVE INFORMATION
REBAR MAY BE ADJUSTED TO ACCOMODATE SLEEVES.

UNOFFICIAL SET

NOT FOR BIDDING

ALT. "A"

STATE OF TENNESSEE
DEPARTMENT OF TRANSPORTATION

# PAVEMENT AT BRIDGE ENDS DETAILS TOP MAT
STATE ROUTE 25
OVER
LIBERTY BRANCH
BR. NO. 83-SR25-10.89
SUMNER COUNTY
2014

PIN NO. 120026.00

| | | | |
|---|---|---|---|
| DESIGNED BY | GRESHAM SMITH & PARTNERS | DATE | 5/2014 |
| DRAWN BY | R. PALMER | DATE | 5/2014 |
| SUPERVISED BY | T. KNIAZEWYCZ | DATE | 5/2014 |
| CHECKED BY | T. KNIAZEWYCZ | DATE | 6/2014 |

GS&P GRESHAM SMITH AND PARTNERS

gyoun
P:\2807118\b\AltA\8071b18as6.sht
8/5/2014
$PRF$

| CONST. NO. | | |
|---|---|---|
| PROJECT NO. | YEAR | SHEET NO. |
| 83005-4246-04 | 2014 | |

REVISIONS

| NO. | DATE | BY | BRIEF DESCRIPTION |
|---|---|---|---|
| | | | |

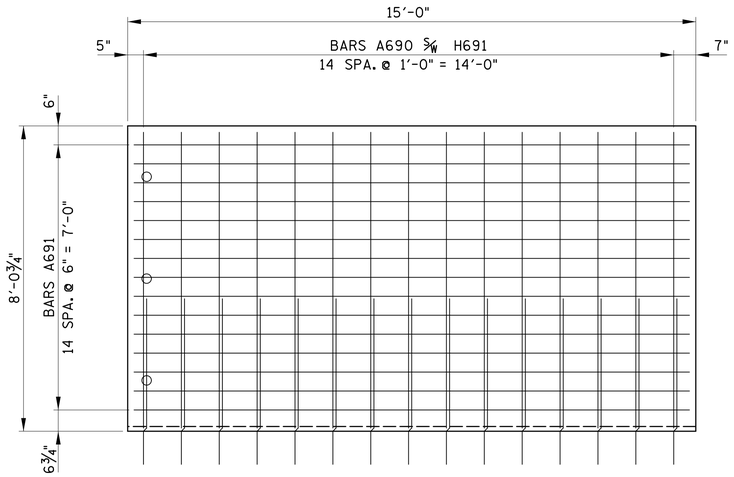


EXTERIOR APPROACH SLAB PANEL 1

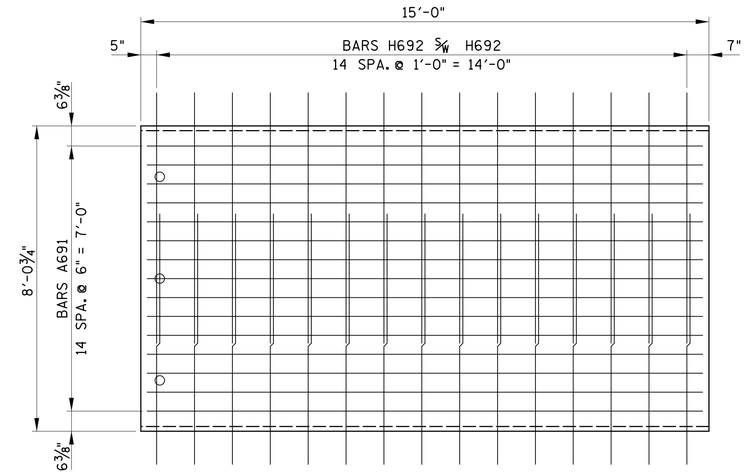


INTERIOR APPROACH SLAB PANEL 3

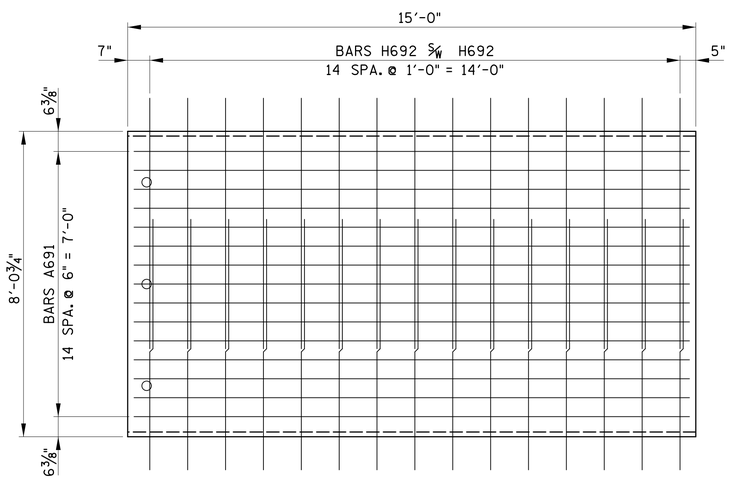


INTERIOR APPROACH SLAB PANEL 2

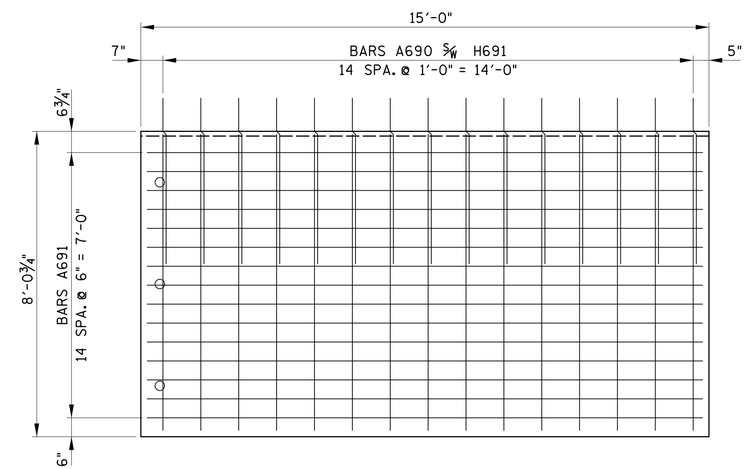


EXTERIOR APPROACH SLAB PANEL 4

○ SEE SECTION A-A ON SHEET BR-117-150
FOR CORRUGATED METAL SLEEVE INFORMATION
REBAR MAY BE ADJUSTED TO ACCOMODATE SLEEVES.

UNOFFICIAL SET

NOT FOR BIDDING

ALT. "A"

STATE OF TENNESSEE
DEPARTMENT OF TRANSPORTATION

PAVEMENT AT BRIDGE
ENDS DETAILS BOT. MAT
STATE ROUTE 25
OVER
LIBERTY BRANCH
BR. NO. 83-SR25-10.89
SUMNER COUNTY
2014

BR-117- 152

gyoun
P:\2807118\b\AltA\8071b18gs7.sht

8/5/2014
$PRF$

PIN NO. 120026.00

| | | | |
|---|---|---|---|
| DESIGNED BY | GRESHAM SMITH & PARTNERS | DATE | 5/2014 |
| DRAWN BY | R. PALMER | DATE | 5/2014 |
| SUPERVISED BY | T. KNIAZEWYCZ | DATE | 5/2014 |
| CHECKED BY | T. KNIAZEWYCZ | DATE | 6/2014 |

GRESHAM SMITH AND PARTNERS

| CONST. NO. | | |
|---|---|---|
| PROJECT NO. | YEAR | SHEET NO. |
| 83005-4246-04 | 2014 | |

REVISIONS

| NO. | DATE | BY | BRIEF DESCRIPTION |
|---|---|---|---|
| | | | |

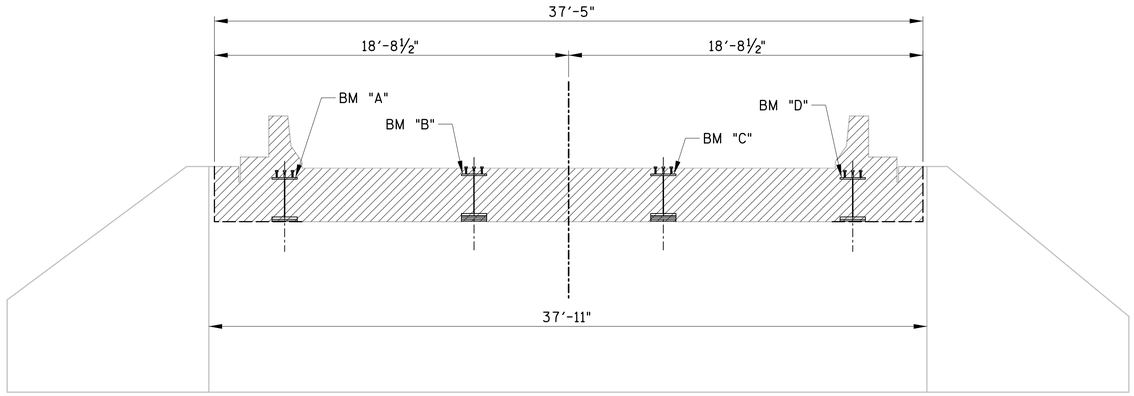


## ELEVATION

LOOKING BACK ON SURVEY
(SHOWING DEMOLITION DIMENSIONS)

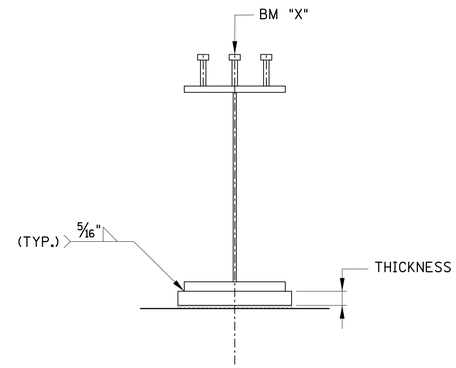


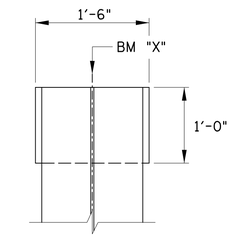


SHOWING SOLE PLATE AND BEARING PAD DIMENSIONS

## SOLE PLATE DETAILS

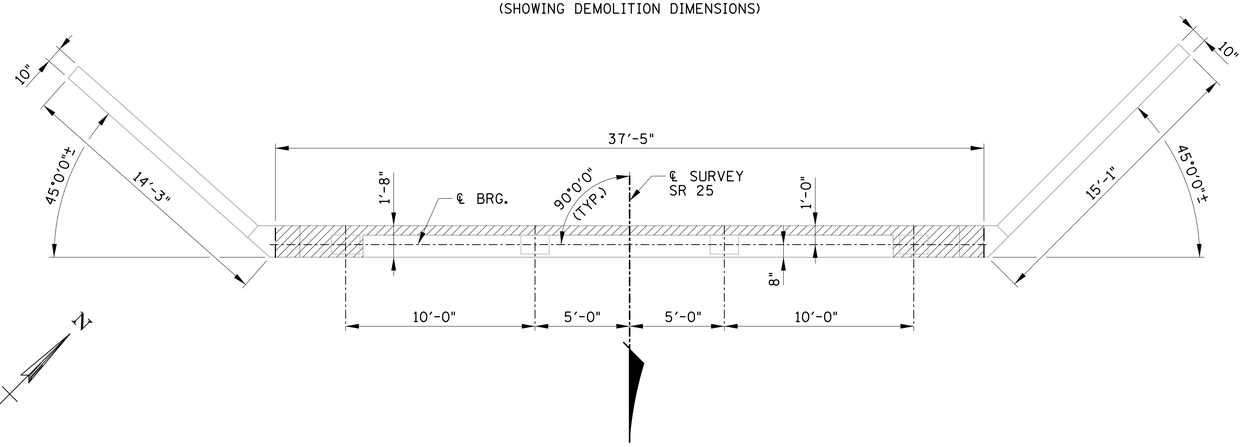


## PLAN

(SHOWING GENERAL DIMENSIONS)

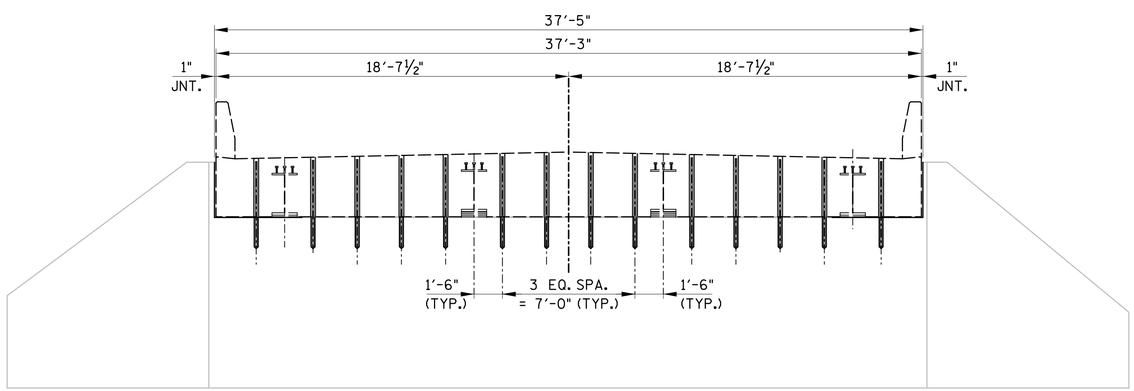


## ELEVATION

LOOKING BACK ON SURVEY
(SHOWING GENERAL DIMENSIONS)

UNOFFICIAL SET

NOT FOR BIDDING

ALT. "A"

STATE OF TENNESSEE
DEPARTMENT OF TRANSPORTATION
ABUTMENT NO. 1
DETAILS
STATE ROUTE 25
OVER
LIBERTY BRANCH
BR. NO. 83-SR25-10.89
SUMNER COUNTY
2014

PIN NO. 120026.00

| | | | |
|---|---|---|---|
| DESIGNED BY | GRESHAM SMITH & PARTNERS | DATE | 5/2014 |
| DRAWN BY | R. PALMER | DATE | 5/2014 |
| SUPERVISED BY | T. KNIAZEWYCZ | DATE | 5/2014 |
| CHECKED BY | T. KNIAZEWYCZ | DATE | 6/2014 |

GRESHAM SMITH AND PARTNERS

gyoun
P:\2807118\b\AltA\8071b18aal.sht
8/5/2014
$PRF$

| CONST. NO. | | |
|---|---|---|
| PROJECT NO. | YEAR | SHEET NO. |
| 83005-4246-04 | 2014 | |

REVISIONS

| NO. | DATE | BY | BRIEF DESCRIPTION |
|---|---|---|---|
| | | | |

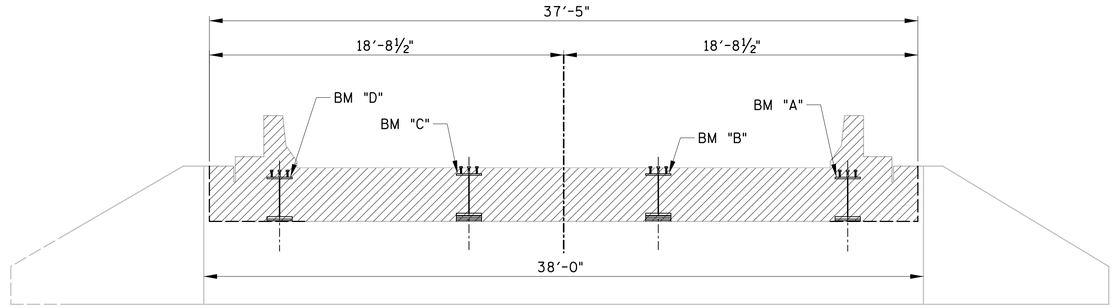


## ELEVATION

LOOKING AHEAD ON SURVEY
(SHOWING DEMOLITION DIMENSIONS)

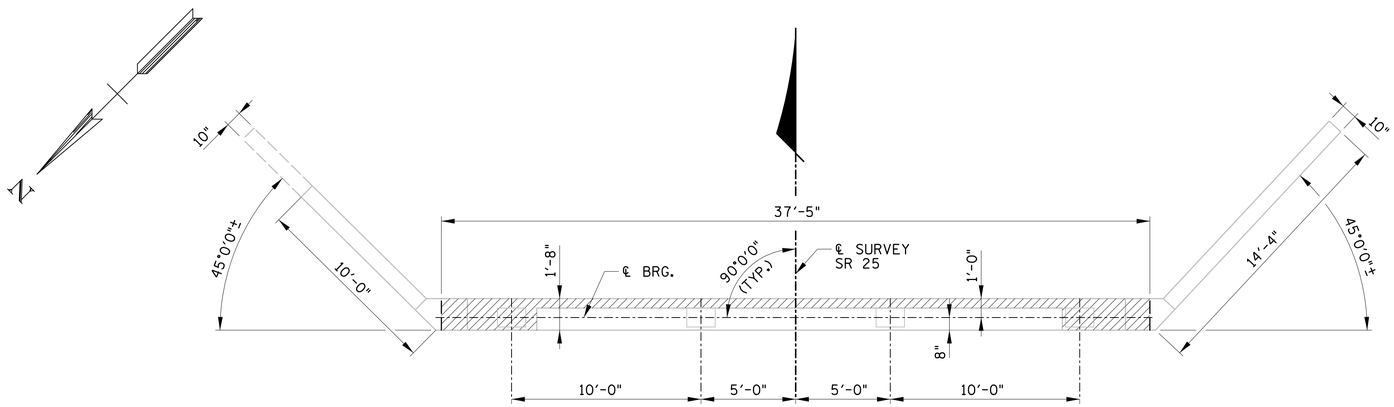


## PLAN

(SHOWING GENERAL DIMENSIONS)

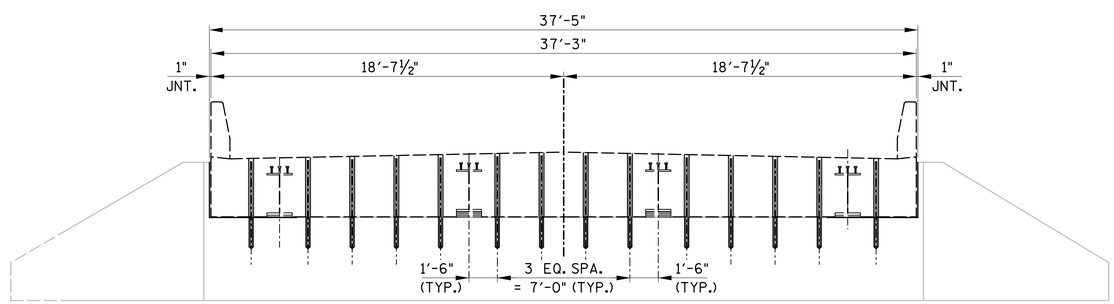


## ELEVATION

LOOKING BACK ON SURVEY
(SHOWING GENERAL DIMENSIONS)

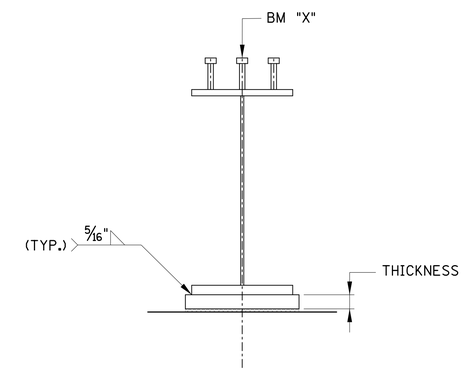


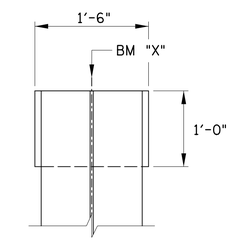


SHOWING SOLE PLATE
AND BEARING PAD
DIMENSIONS

## SOLE PLATE DETAILS

UNOFFICIAL SET

NOT FOR BIDDING

ALT. "A"

STATE OF TENNESSEE
DEPARTMENT OF TRANSPORTATION
ABUTMENT NO. 2
DETAILS
STATE ROUTE 25
OVER
LIBERTY BRANCH
BR. NO. 83-SR25-10.89
SUMNER COUNTY
2014

BR-117- 154

PIN NO. 120026.00

| | | | |
|---|---|---|---|
| DESIGNED BY | GRESHAM SMITH & PARTNERS | DATE | 5/2014 |
| DRAWN BY | R. PALMER | DATE | 5/2014 |
| SUPERVISED BY | T. KNIAZEWYCZ | DATE | 5/2014 |
| CHECKED BY | T. KNIAZEWYCZ | DATE | 6/2014 |

GRESHAM SMITH AND PARTNERS

gyoun
P:\2807118\b\AltA\8071b18aa2.sht
8/5/2014
$PRF$

| CONST. NO. | | |
|---|---|---|
| PROJECT NO. | YEAR | SHEET NO. |
| 83005-4246-04 | 2014 | |

REVISIONS

| NO. | DATE | BY | BRIEF DESCRIPTION |
|---|---|---|---|
| | | | |

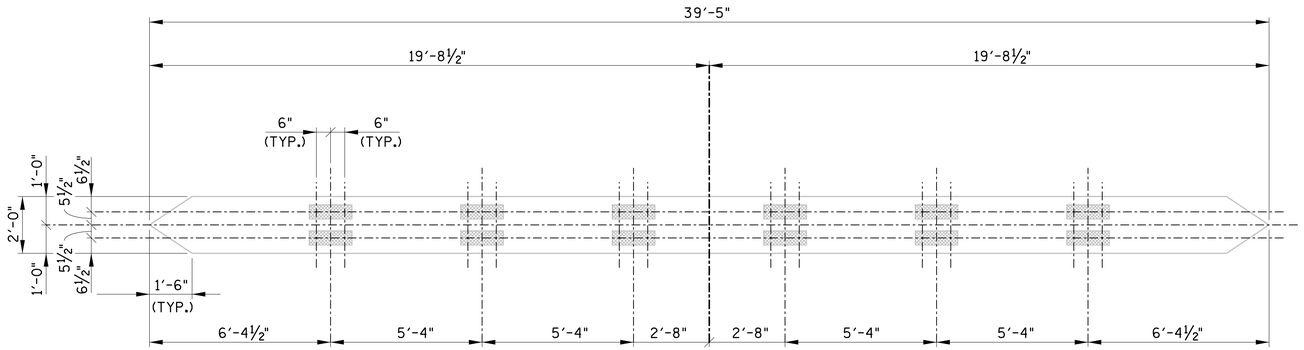


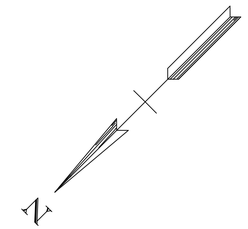


GENERAL PIER DETAILS
FOR INFORMATION ONLY

PIER TO BE DEMOLISHED
TO ONE FOOT BELOW
EXISTING GROUND LINE.

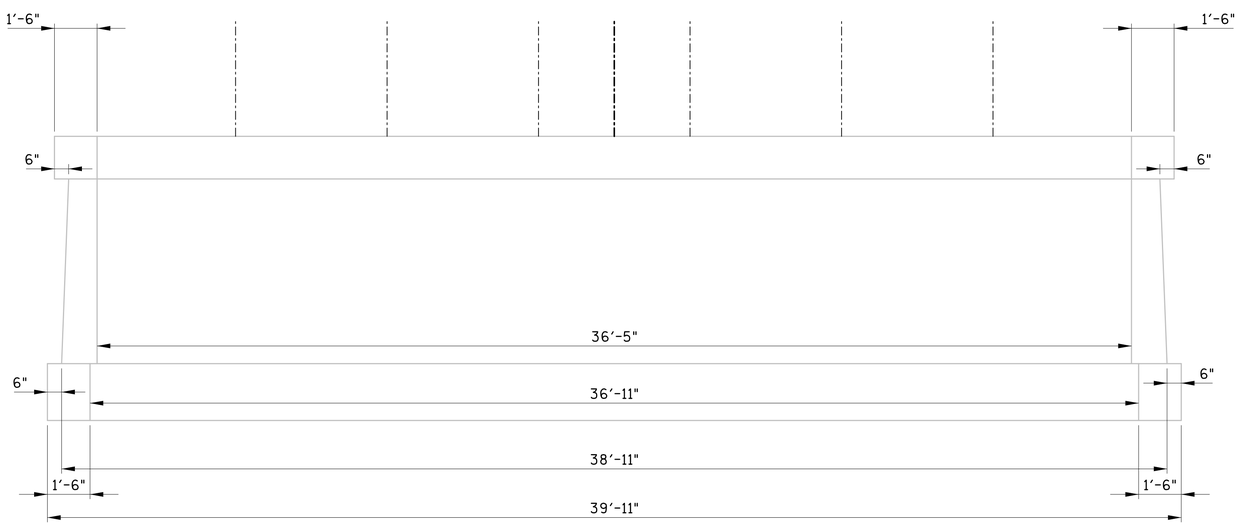


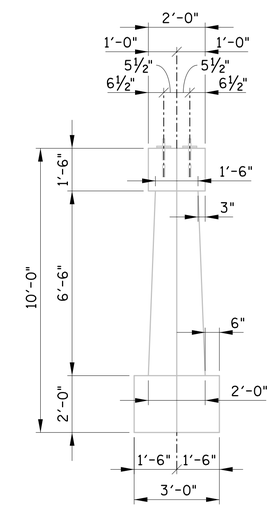


UNOFFICIAL SET

NOT FOR BIDDING

ALT. "A"

STATE OF TENNESSEE
DEPARTMENT OF TRANSPORTATION
PIER NO. 1
EXISTING DETAILS
STATE ROUTE 25
OVER
LIBERTY BRANCH
BR. NO. 83-SR25-10.89
SUMNER COUNTY
2014

PIN NO. 120026.00

| | | | |
|---|---|---|---|
| DESIGNED BY | GRESHAM SMITH & PARTNERS | DATE | 5/2014 |
| DRAWN BY | R. PALMER | DATE | 5/2014 |
| SUPERVISED BY | T. KNIAZEWYCZ | DATE | 5/2014 |
| CHECKED BY | T. KNIAZEWYCZ | DATE | 6/2014 |

GRESHAM SMITH AND PARTNERS

gyoun
P:\2807118\b\ALTA\8071b18db1.sht

8/5/2014
$PRF$

BR-117-155

CONST. NO. _____

| PROJECT NO. | YEAR | SHEET NO. |
|---|---|---|
| 83005-4246-04 | 2014 | |

REVISIONS

| NO. | DATE | BY | BRIEF DESCRIPTION |
|---|---|---|---|
| | | | |

## SUPERSTRUCTURE (EPOXY)

| | | | | BENDING DIMENSIONS | | | | |
|---|---|---|---|---|---|---|---|---|
| BAR | LOCATION | SIZE | NO. REQ'D | A | B | C | D | LENGTH |
| A500E | SLAB | 5 | 38 | | | | | 45'-0" |
| A5001E | SLAB | 5 | 38 | | | | | 21'-6" |
| | | | | | | | | |
| A600E | SLAB | 6 | 40 | | | | | 45'-0" |
| A601E | SLAB | 6 | 40 | | | | | 21'-6" |
| A602E | SLAB | 6 | 472 | | | | | 17'-9" |
| A603E | SLAB | 6 | 12 | | | | | 16'-9" |
| | | | | | | | | |
| B570E | SLAB | 5 | 384 | 2'-1" | | | | 2'-8" |
| | | | | | | | | |
| H500E | SLAB | 5 | 8 | 1'-7" | 2'-2" | | | 5'-11" |
| | | | | | | | | |
| H600E | SLAB | 6 | 220 | 5" | 4'-4" | | | 9'-1" |
| H601E | SLAB | 6 | 8 | 2'-5" | 4'-4" | | | 11'-1" |
| H602E | SLAB | 6 | 8 | 9" | 4'-4" | | | 9'-5" |
| H603E | SLAB | 6 | 4 | 1'-5" | 4'-4" | | | 10'-1" |
| | | | | | | | | |
| L500E | SLAB | 5 | 76 | 2'-2" | 1'-0" | 1'-7" | | 8'-6" |
| | | | | | | | | |
| R600E | SLAB | 6 | 76 | 2'-0" | 2'-8" | | | 4'-8" |
| R601E | SLAB | 6 | 72 | 2'-0" | 2'-0" | | | 4'-0" |
| | | | | | | | | |

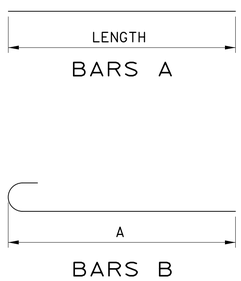


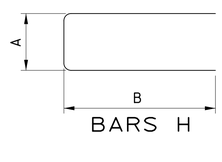


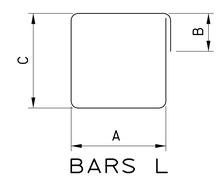


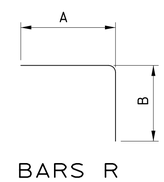


UNOFFICIAL SET

NOT FOR BIDDING

ALT. "A"

STATE OF TENNESSEE
DEPARTMENT OF TRANSPORTATION

BILL OF STEEL

STATE ROUTE 25
OVER
LIBERTY BRANCH
BR. NO. 83-SR25-10.89
SUMNER COUNTY
2014

BR-117- 155A

PIN NO. 120026.00

| | | | |
|---|---|---|---|
| DESIGNED BY | GRESHAM SMITH & PARTNERS | DATE | 5/2014 |
| DRAWN BY | R. PALMER | DATE | 5/2014 |
| SUPERVISED BY | T. KNIAZEWYCZ | DATE | 5/2014 |
| CHECKED BY | T. KNIAZEWYCZ | DATE | 6/2014 |

GRESHAM SMITH AND PARTNERS

gyoun
P:\2807118\b\AltA\8071b18ar1.sht

8/5/2014
$PRF$

| CONST. NO. | | |
|---|---|---|
| PROJECT NO. | YEAR | SHEET NO. |
| 83005-4246-04 | 2014 | |

REVISIONS

| NO. | DATE | BY | BRIEF DESCRIPTION |
|---|---|---|---|
| | | | |

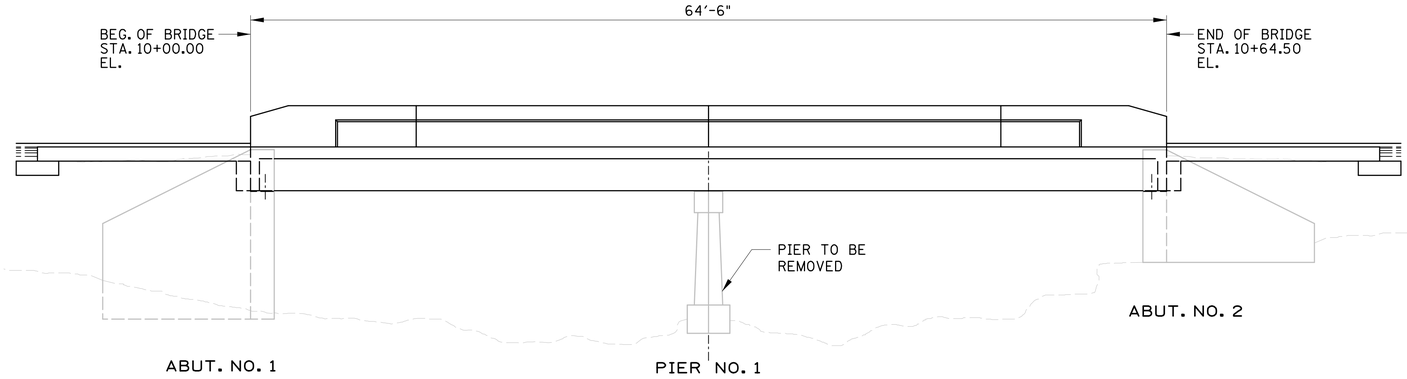


ELEVATION

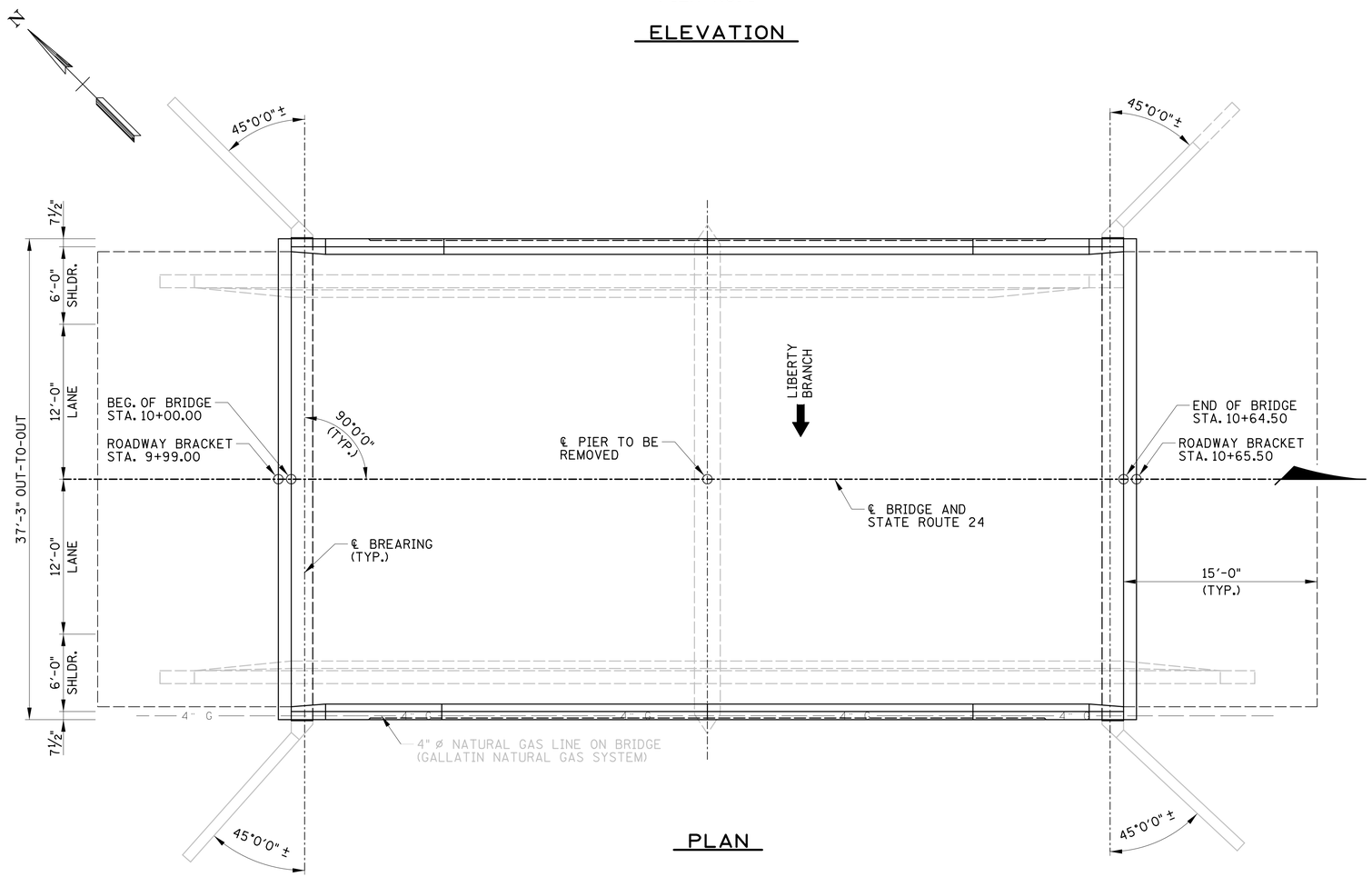


PLAN

## SCOPE OF WORK – ALT. "B"

1) PLACE TRAFFIC CONTROL TO PERFORM INITIAL WORK ON BRIDGE & APPROACHES.
2) COMPLETE ROADWAY APPROACH WIDENING DURING OFF-PEAK HOURS. USE OF ONE-LANE CLOSURE WITH FLAGMAN WILL BE ALLOWED WITH APPROVAL OF THE ENGINEER.
3) PERFORM ABUTMENT MODIFICATIONS AND REPAIRS.
4) INSTALL NEW PRECAST BOX BEAMS, FULL DEPTH DECK PANELS, CLOSURE POURS AND PRECAST APPROACH SLABS DURING WEEKEND ROADWAY CLOSURE.
5) PLACE NEW CONCRETE PARAPETS ON BOTH SIDES OF THE BRIDGE. THIS WORK TO BE COMPLETED AFTER THE SUPERSTRUCTURE IS IN-PLACE.
6) INSTALL NEW DECK SEAL AND ASPHALT OVERLAY ON DECK AND APPROACH SLABS.
7) TEXTURE COAT ALL EXPOSED CONCRETE SURFACES.

## LIST OF BRIDGE DRAWINGS

| DWG. NO. | CURRENT REV. DATE | TITLE |
|---|---|---|
| BR-117-142 | | ESTIMATED BRIDGE QUANTITIES |
| BR-117-143 | | BRIDGE GENERAL NOTES SHEET 1 OF 2 |
| BR-117-144 | | BRIDGE GENERAL NOTES SHEET 2 OF 2 |
| BR-117-156 | | LAYOUT OF BRIDGE TO BE REPAIRED |
| BR-117-157 | | SUPERSTRUCTURE |
| BR-117-158 | | SUPERSTRUCTURE DETAILS |
| BR-117-159 | | SUPERSTRUCTURE DETAILS |
| BR-117-160 | | SUPERSTRUCTURE DETAILS |
| BR-117-161 | | PRESTRESSED BOX BEAM |
| BR-117-162 | | PAVEMENT AT BRIDGE ENDS - 1 OF 3 |
| BR-117-163 | | PAVEMENT AT BRIDGE ENDS - 2 OF 3 |
| BR-117-164 | | PAVEMENT AT BRIDGE ENDS - 3 OF 3 |
| BR-117-165 | | ABUTMENT NO. 1 |
| BR-117-166 | | ABUTMENT NO. 2 |
| BR-117-167 | | EXISTING PIER DETAILS |
| BR-117-167A | | BILL OF STEEL |

## BRIDGE APPURTENANCES

| | | |
|---|---|---|
| STD-1-1SS | 7-31-00 | STANDARD CONCRETE BARRIER RAIL |
| STD-9-1 | 12-19-94 | REINFORCING BAR SUPPORT DETAILS FOR CONCRETE SLABS |
| STD-10-1 | 04-08-05 | MISCELLANEOUS ABUTMENT AND DRAINAGE DETAILS |

UNOFFICIAL SET

NOT FOR BIDDING

ALT. "B"

STATE OF TENNESSEE
DEPARTMENT OF TRANSPORTATION

# LAYOUT OF BRIDGE TO BE REPAIRED ALT. STATE ROUTE 25 OVER LIBERTY BRANCH

BR. NO. 83-SR25-10.89
SUMNER COUNTY
2014

PIN NO. 120026.00

| | | | |
|---|---|---|---|
| DESIGNED BY | GRESHAM SMITH & PARTNERS | DATE | 5/2014 |
| DRAWN BY | R. PALMER | DATE | 5/2014 |
| SUPERVISED BY | T. KNIAZEWYCZ | DATE | 5/2014 |
| CHECKED BY | T. KNIAZEWYCZ | DATE | 6/2014 |

GRESHAM SMITH AND PARTNERS

gyoun
P:\2807118\b\AIHB\8071b18bpl.sht
8/5/2014
$PRF$

| CONST. NO. | | |
|---|---|---|
| PROJECT NO. | YEAR | SHEET NO. |
| 83005-4246-04 | 2014 | |

REVISIONS

| NO. | DATE | BY | BRIEF DESCRIPTION |
|---|---|---|---|
| | | | |

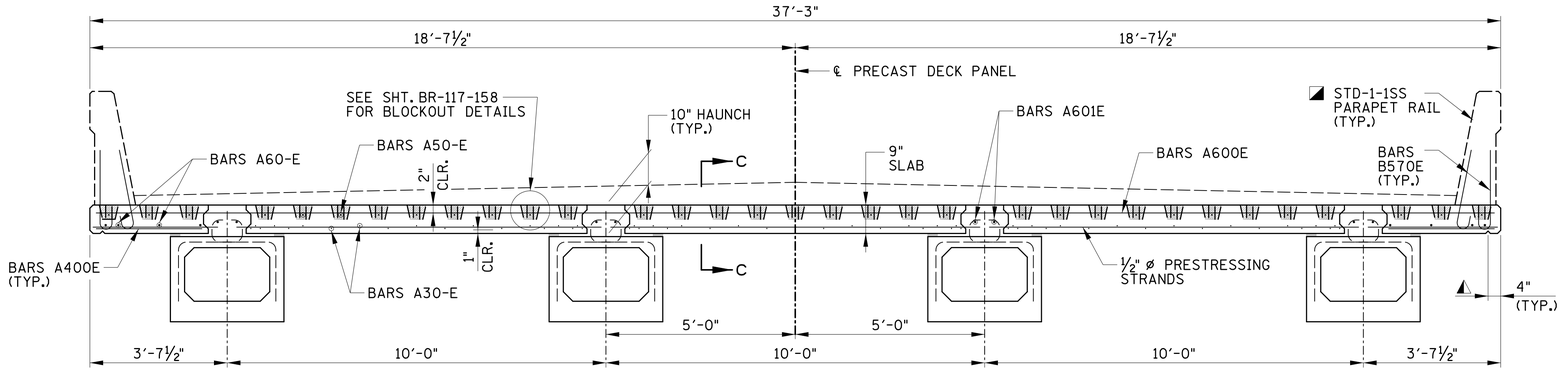


## TYPICAL CROSS-SECTION

◭ DENOTE: ¾" TRIANGULAR DRIP NOTCH TO RUN FULL LENGTH OF SLAB

◪ DENOTE: PARAPET MAY BE CAST PRIOR TO PLACEMENT OF SUPERSTRUCTURE UNIT.

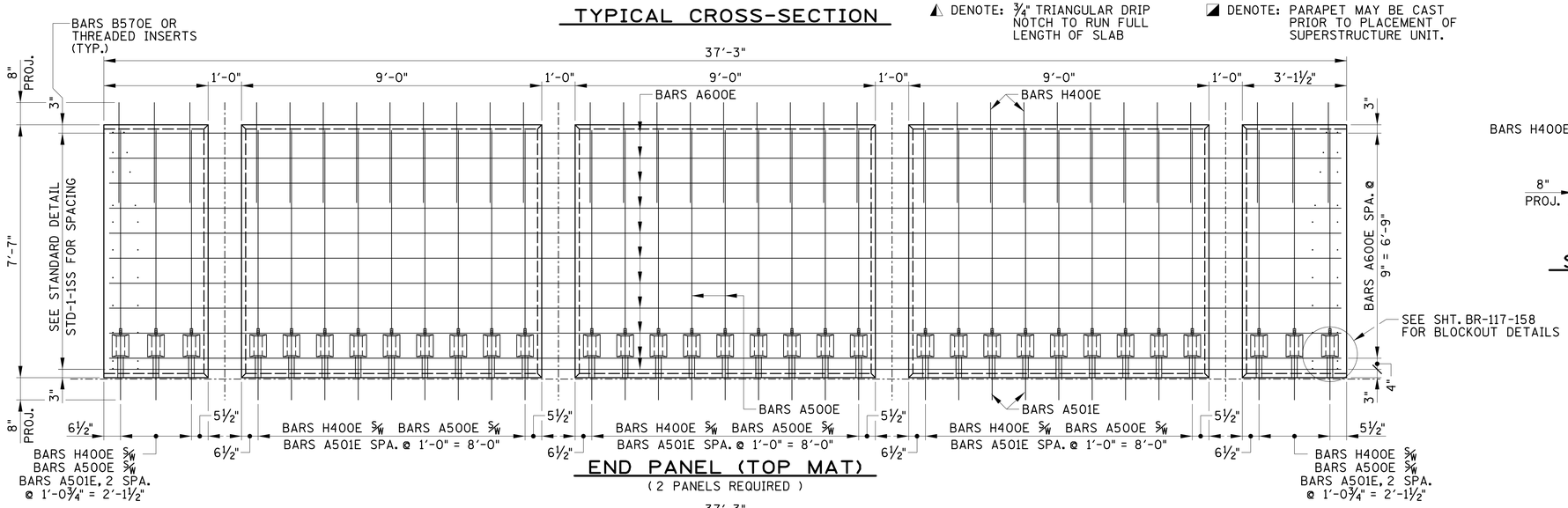


## END PANEL (TOP MAT)

( 2 PANELS REQUIRED )

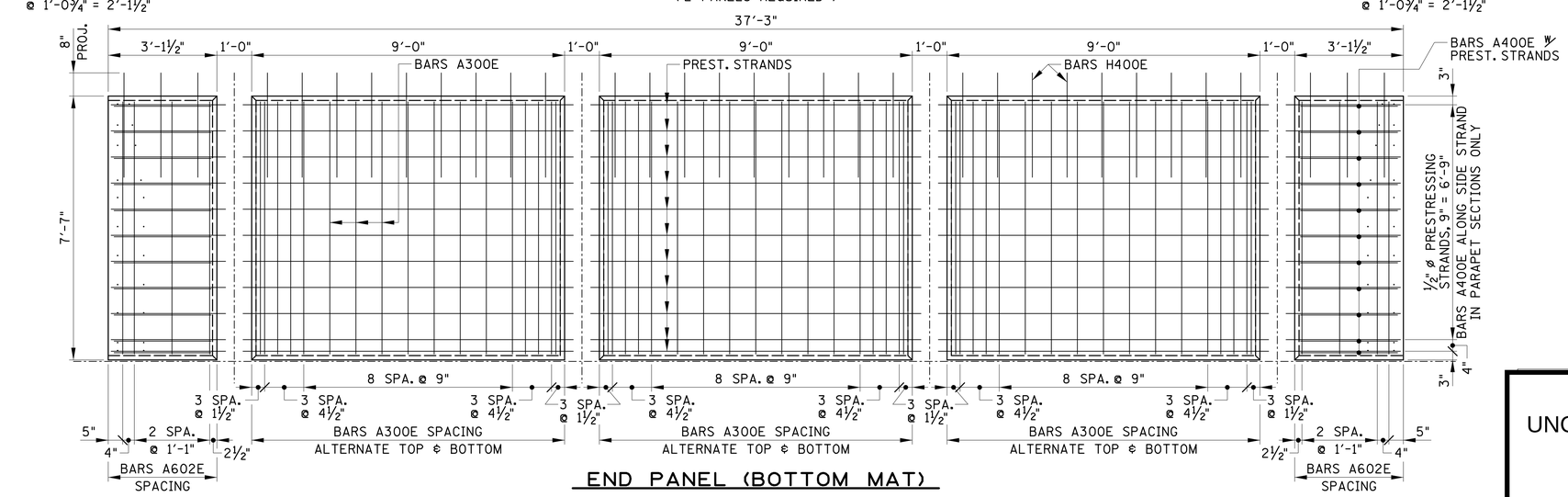


## END PANEL (BOTTOM MAT)

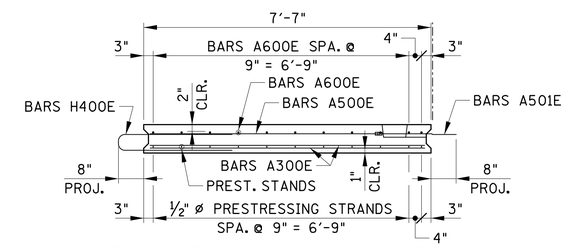


## SECTION C-C (END PANEL)

PIN NO. 120026.00

| | | | |
|---|---|---|---|
| DESIGNED BY | GRESHAM SMITH & PARTNERS | DATE | 5/2014 |
| DRAWN BY | R. PALMER | DATE | 5/2014 |
| SUPERVISED BY | T. KNIAZEWYCZ | DATE | 5/2014 |
| CHECKED BY | T. KNIAZEWYCZ | DATE | 6/2014 |

GRESHAM SMITH AND PARTNERS

UNOFFICIAL SET

NOT FOR BIDDING

ALT. "B"

STATE OF TENNESSEE
DEPARTMENT OF TRANSPORTATION

SUPERSTURCTURE

STATE ROUTE 25
OVER
LIBERTY BRANCH
BR. NO. 83-SR25-10.89
SUMNER COUNTY
2014

BR-117- 157

gyoun
P:\2807118\b\AltB\807118bsl.sht
8/5/2014
$PRF$

| CONST. NO. | | |
|---|---|---|
| PROJECT NO. | YEAR | SHEET NO. |
| 83005-4246-04 | 2014 | |

REVISIONS

| NO. | DATE | BY | BRIEF DESCRIPTION |
|---|---|---|---|
| | | | |

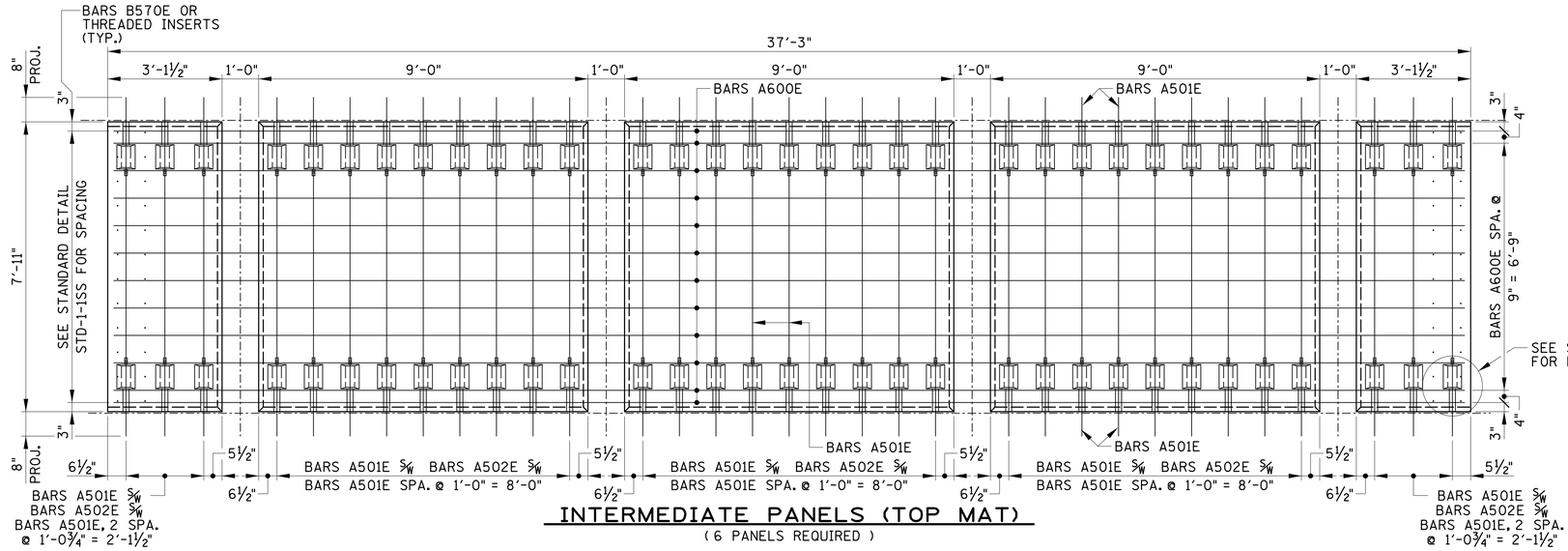


INTERMEDIATE PANELS (TOP MAT)

( 6 PANELS REQUIRED )

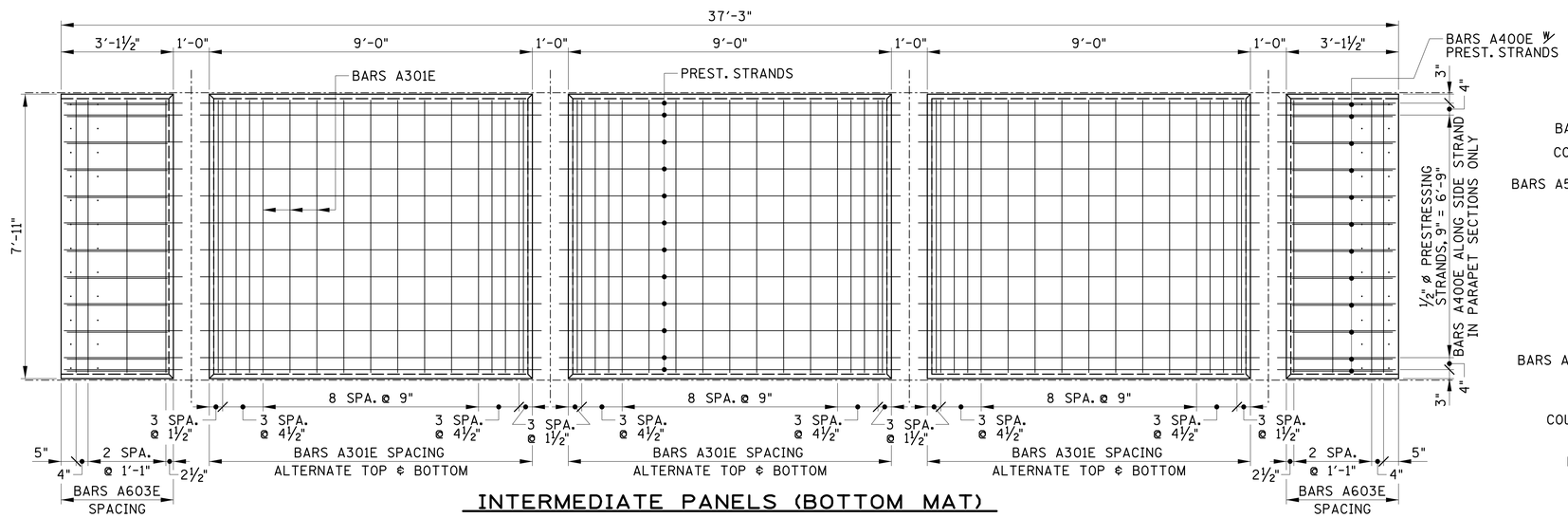


INTERMEDIATE PANELS (BOTTOM MAT)

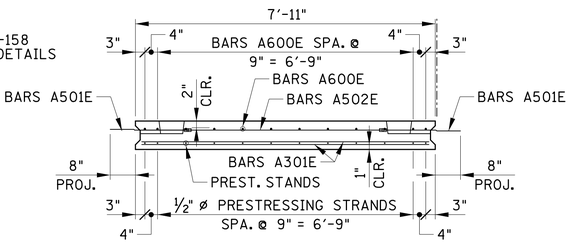


INTERMEDIATE PANELS CROSS-SECTION

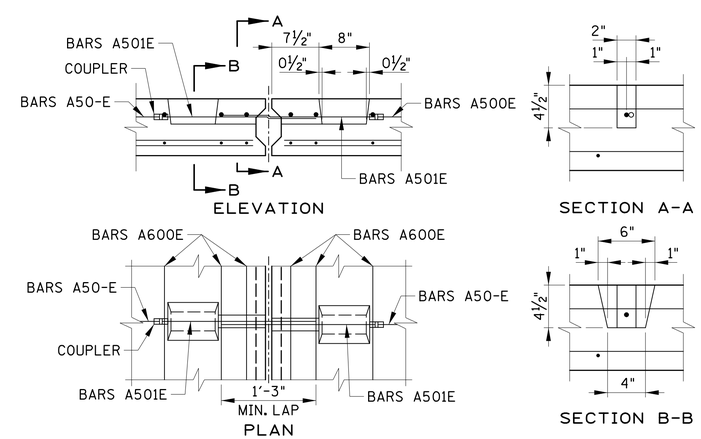


PANEL TO PANEL CONNECTION

( DETAIL SHOWING BLOCKOUT )

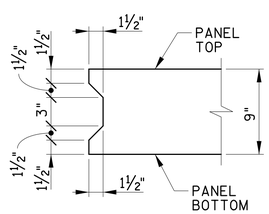


KEY WAY DETAIL

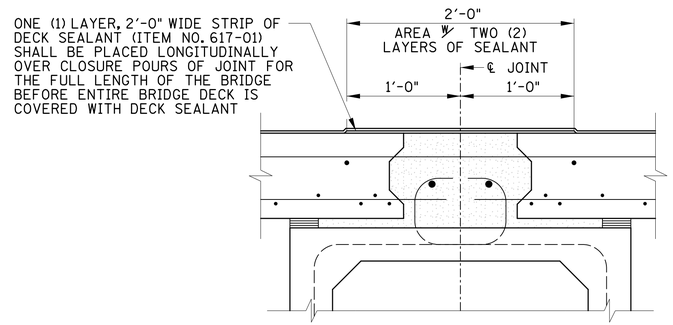


ADDITIONAL BRIDGE DECK MEMBRANE DETAIL

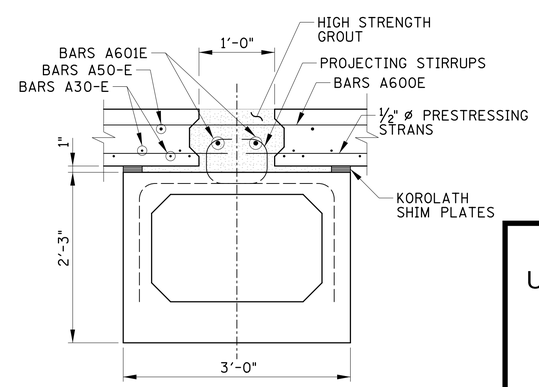


PANEL TO BEAM CONNECTION

UNOFFICIAL SET

NOT FOR BIDDING

ALT. "B"

STATE OF TENNESSEE
DEPARTMENT OF TRANSPORTATION

SUPERSTRUCTURE DETAILS

STATE ROUTE 25
OVER
LIBERTY BRANCH
BR. NO. 83-SR25-10.89
SUMNER COUNTY
2014

P.I.N. NO. 120026.00

| | | | |
|---|---|---|---|
| DESIGNED BY | GRESHAM SMITH & PARTNERS | DATE | 5/2014 |
| DRAWN BY | R. PALMER | DATE | 5/2014 |
| SUPERVISED BY | T. KNIAZEWYCZ | DATE | 5/2014 |
| CHECKED BY | T. KNIAZEWYCZ | DATE | 6/2014 |

GRESHAM SMITH AND PARTNERS

gyoun
P:\2807118\b\AHB\8071b18bs2.sht
8/5/2014
$PRF$

| CONST. NO. | | |
|---|---|---|
| PROJECT NO. | YEAR | SHEET NO. |
| 83005-4246-04 | 2014 | |

REVISIONS

| NO. | DATE | BY | BRIEF DESCRIPTION |
|---|---|---|---|
| | | | |

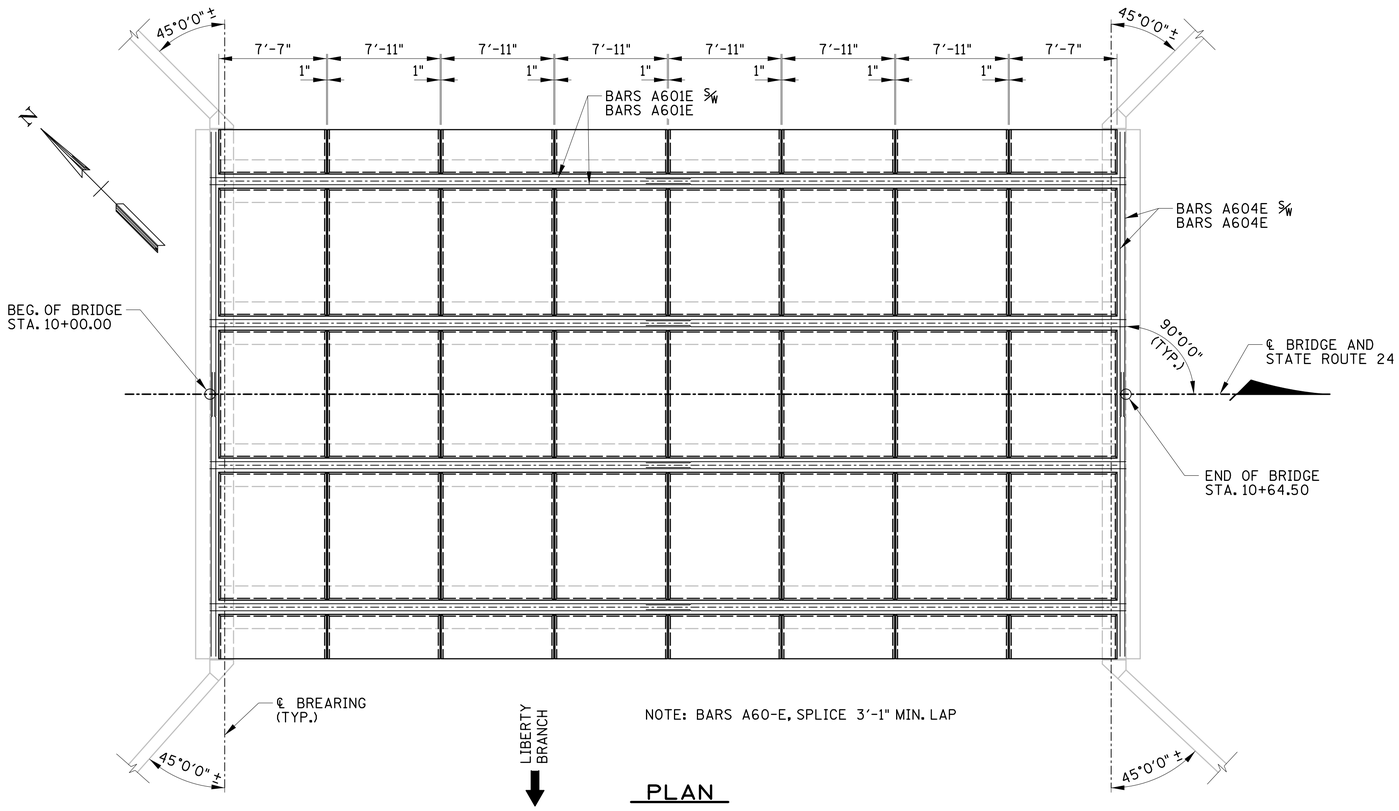


NOTE: BARS A60-E, SPLICE 3'-1" MIN. LAP

PLAN

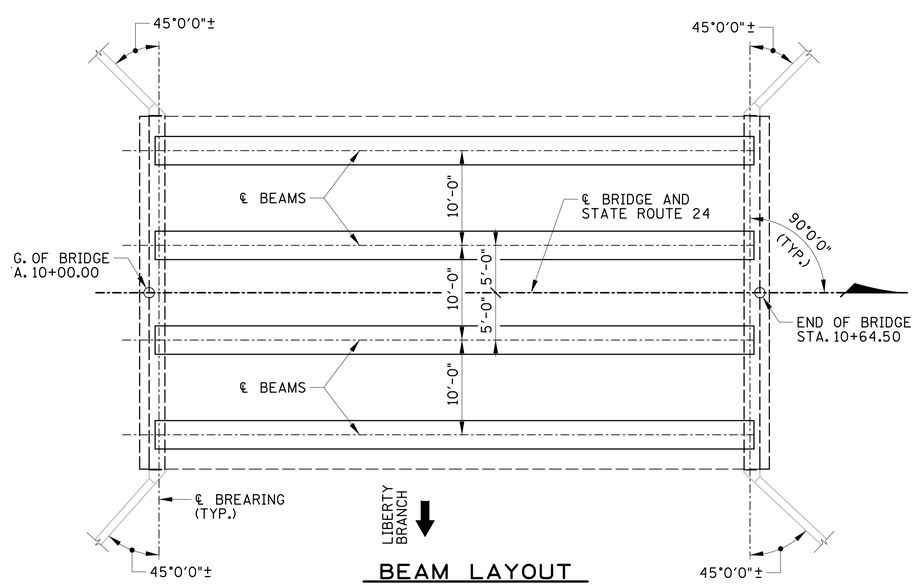


BEAM LAYOUT

UNOFFICIAL SET

NOT FOR BIDDING

ALT. "B"

STATE OF TENNESSEE
DEPARTMENT OF TRANSPORTATION

SUPERSTRUCTURE DETAILS

STATE ROUTE 25
OVER
LIBERTY BRANCH
BR. NO. 83-SR25-10.89
SUMNER COUNTY
2014

PIN NO. 120026.00

| | | | |
|---|---|---|---|
| DESIGNED BY | GRESHAM SMITH & PARTNERS | DATE | 5/2014 |
| DRAWN BY | R. PALMER | DATE | 5/2014 |
| SUPERVISED BY | T. KNIAZEWYCZ | DATE | 5/2014 |
| CHECKED BY | T. KNIAZEWYCZ | DATE | 6/2014 |

GRESHAM SMITH AND PARTNERS

gyoun
P:\2807118\b\Alt B\8071b18bs3.sht
8/5/2014
$PRF$

| CONST. NO. | | |
|---|---|---|
| PROJECT NO. | YEAR | SHEET NO. |
| 83005-4246-04 | 2014 | |

REVISIONS

| NO. | DATE | BY | BRIEF DESCRIPTION |
|---|---|---|---|
| | | | |

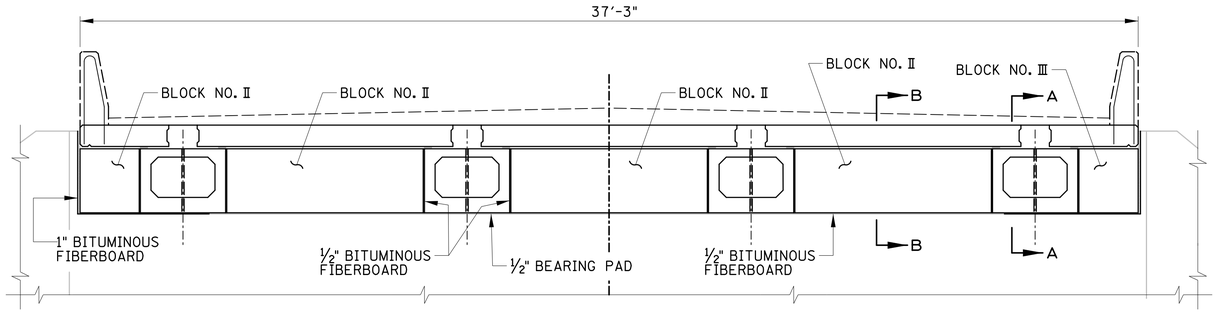


## CROSS-SECTION @ FRONT FACE OF ABUTMENT

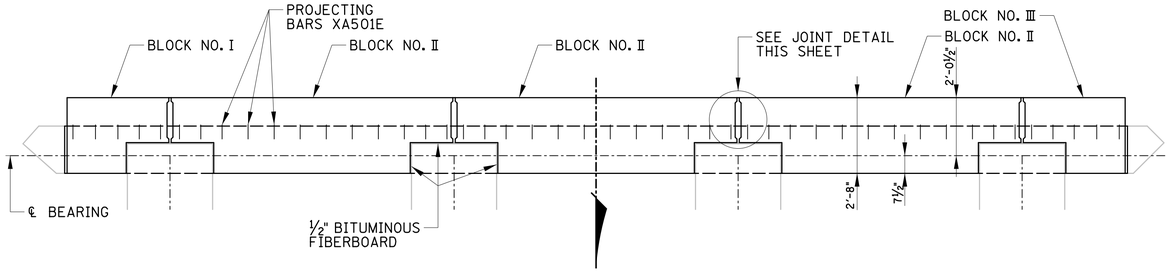


## PLAN VIEW @ END OF BEAMS

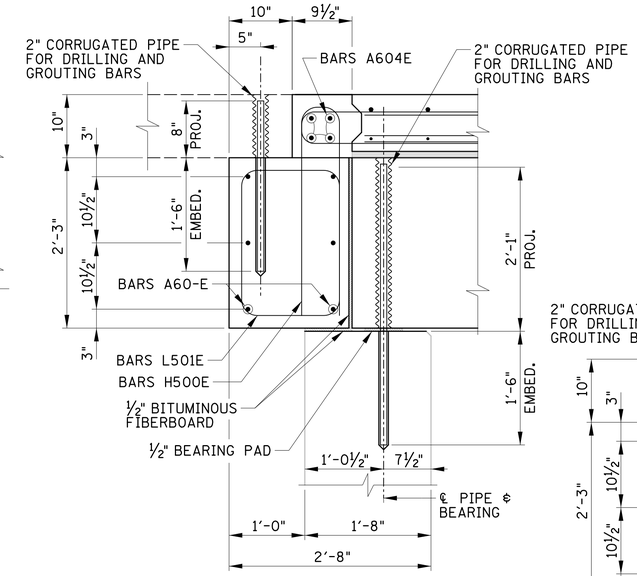


## SECTION A-A

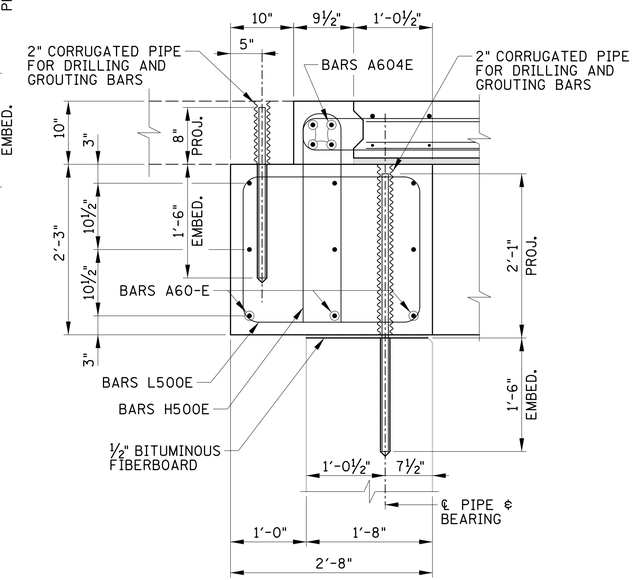


## SECTION B-B

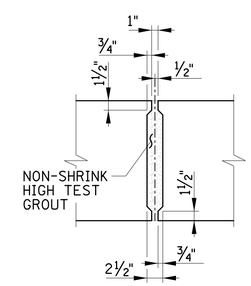


## JOINT DETAIL

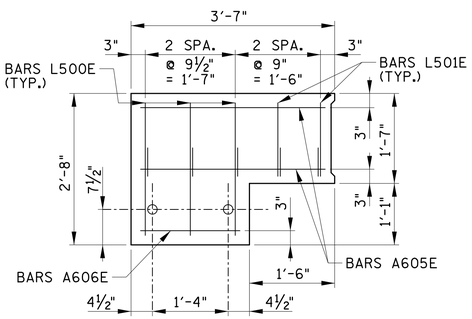


PLAN

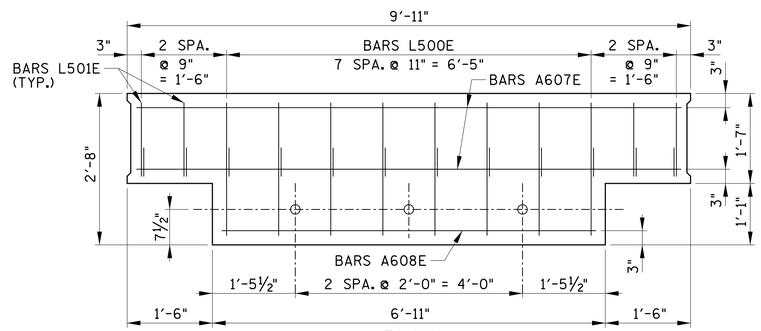


PLAN

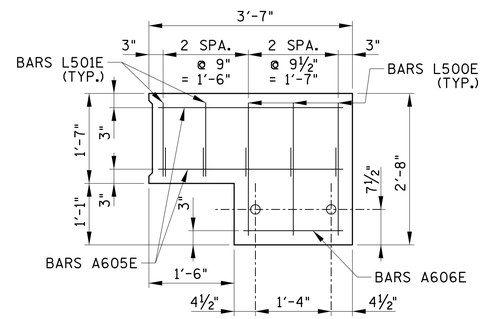


PLAN

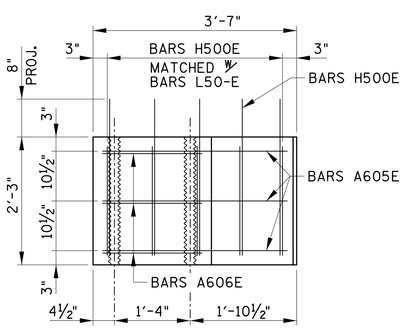


ELEVATION

## NO. I BLOCK

(1 REQUIRED EA. ABUT.)

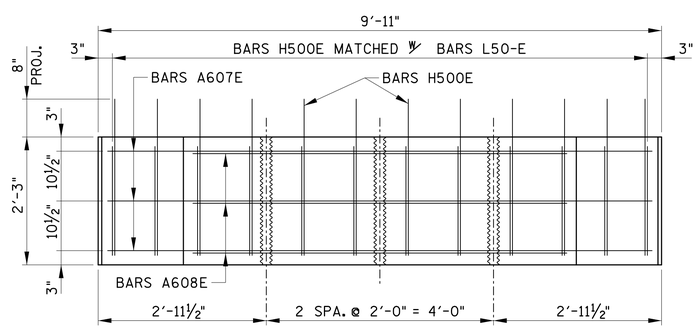


ELEVATION

## NO. II BLOCK

(3 REQUIRED EA. ABUT.)

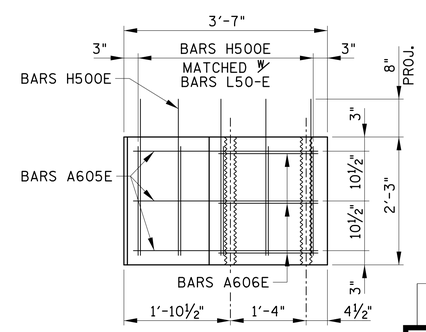


ELEVATION

## NO. III BLOCK

(1 REQUIRED EA. ABUT.)

UNOFFICIAL SET

NOT FOR BIDDING

ALT. "B"

STATE OF TENNESSEE
DEPARTMENT OF TRANSPORTATION

# SUPERSTRUCTURE DETAILS

STATE ROUTE 25
OVER
LIBERTY BRANCH
BR. NO. 83-SR25-10.89
SUMNER COUNTY
2014

PIN NO. 120026.00

| | | | |
|---|---|---|---|
| DESIGNED BY | GRESHAM SMITH & PARTNERS | DATE | 5/2014 |
| DRAWN BY | R. PALMER | DATE | 5/2014 |
| SUPERVISED BY | T. KNIAZEWYCZ | DATE | 5/2014 |
| CHECKED BY | T. KNIAZEWYCZ | DATE | 6/2014 |

GRESHAM SMITH AND PARTNERS

BR-117- 160

gyoun
P:\2807118\b\AltB\8071b18bs4.sht
8/5/2014
$PRF$

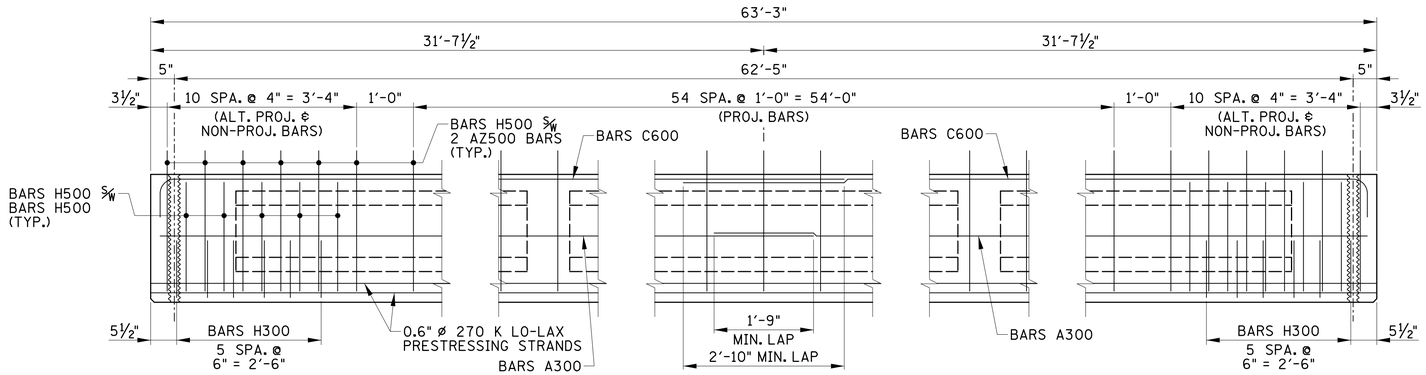


## ELEVATION

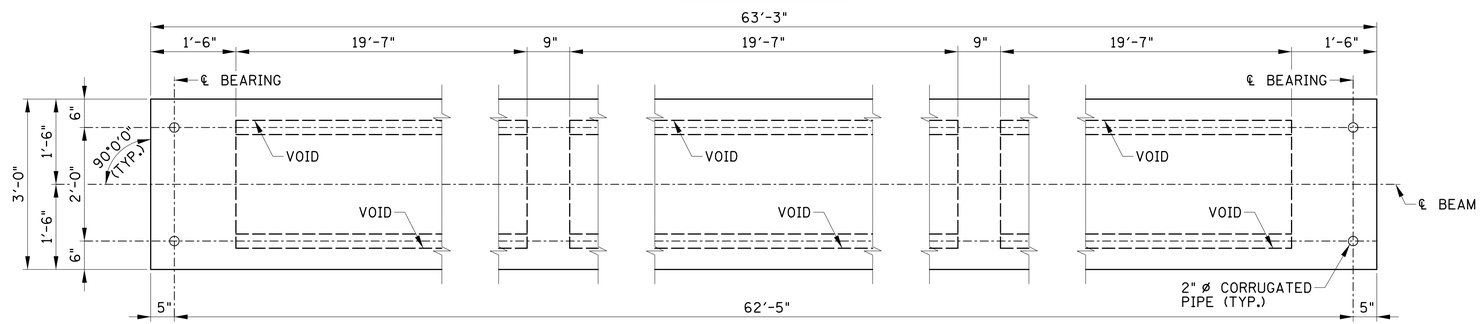


## PLAN

## BILL OF STEEL- PER BEAM

| BAR | NO. REQ'D. | LENGTH |
|---|---|---|
| A500 | 12 | 5'-0" |
| A501 | 6 | 2'-8" |
| A502 | 8 | 1'-11" |
| C600 | 8 | 32'-10½" |
| H300 | 12 | 4'-9½" |
| H500 | 87 | 5'-9" |
| ZA500 | 134 | 4'-2½" |

CONST. NO. _____

| PROJECT NO. | YEAR | SHEET NO. |
|---|---|---|
| 83005-4246-04 | 2014 | |

REVISIONS

| NO. | DATE | BY | BRIEF DESCRIPTION |
|---|---|---|---|
| | | | |

## GENERAL NOTES

SPECIFICATIONS: STANDARD ROAD AND BRIDGE SPECIFICATIONS OF THE TENNESSEE DEPARTMENT OF TRANSPORTATION (MARCH 1, 2006 EDITION)

NOTE: THE CONCRETE FOR THIS CONSTRUCTION SHALL BE OF SUCH PROPERTIES AS TO ATTAIN A COMPRESSIVE STRENGTH OF NOT LESS THAN 9,000 psi AT THE AGE OF 28 DAYS AND STRESS TRANSFER SHALL NOT BE MADE TO THE BRIDGE MEMBER UNTIL THE TEST SPECIMENS INDICATE THAT THE CONCRETE HAS REACHED A COMPRESSIVE STRENGTH OF AT LEAST 8,000 psi. SEE GENERAL NOTES FOR CONCRETE FINISHING NOTE.

STRANDS: 7 WIRE, UNCOATED, STRESS RELIEVED LOW RELAXATION PRESTRESSING CONCRETE STRAND. 0.6" DIA. ASTM GRADE 270K, THE INITIAL TENSION APPLIED SHALL BE 31,003 lbs. PER STRAND. As= 0.217 in²

UNLESS OTHERWISE NOTED, MINIMUM CLEAR DISTANCE FORM THE FACE OF CONCRETE TO ANY REINFORCING BAR IS (1) ONE INCH. BAR SPACING DIMENSIONS ARE CENTER TO CENTER.

REINFORCING STEEL: TO BE ASTM A615 GRADE 60. MINIMUM LAP SPLICE FOR #6 BARS IS 2'-9".

IF BEAMS ARE NOT INSTALLED DIRECTLY FROM DELIVERY TRUCKS, THEY SHALL BE STORED AND HANDLED IN SUCH MANNER AS TO AVOID EXCESSIVE BENDING STRESSES, CRACKING, SPALLING, OR OTHER INJURY. THE BEAMS SHALL BE MAINTAINED IN AN UPRIGHT POSITION, AND KEPT CLEAN OF MUD AND DIRT.

THE TOP OF ALL BEAMS TO BE ROUGH FLOATED, AT APPROXIMATELY THE TIME OF INITIAL SET, THE TOP OF THE BEAM WILL ALSO BE SCRUBBED TRANSVERSELY WITH A COARSE WIRE BRUSH TO REMOVE ALL LAITANCE AND PRODUCE A ROUGH SURFACE. WHERE PRECAST DECK PANELS ARE TO BE USED AND SET ON PADS. THE OUTER (2) TWO INCHES OF THE TOP FLANGE MAY BE TROWELED.

SEE STD. DWG. STD-14-3 FOR ADDITIONAL DETAILS.

PRESTRESSED BEAM DESIGN DATA (PER BEAM):
- LLDFm = 0.890 LANES/GIRDER
- LLDFv = 0.913 LANES/GIRDER
- COMPOSITE DEAD LOAD: 495 LB/FT
- COMPOSITE SLAB DESIGN STRENGTH: f'c = 3000 psi

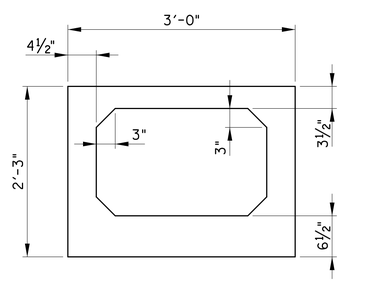


## TYPICAL CROSS-SECTION

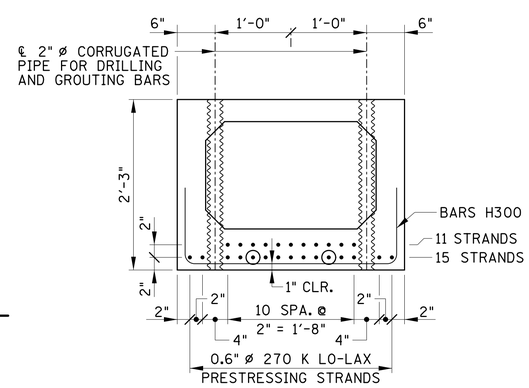


## SECTION

(SHOWING PRESTRESSED STRANDS)
(SHOWING CORRUGATED PIPE @ ℄ BEARING)
⊙ DENOTES: DEBOND STRANDS 2'-0" FROM EACH END.

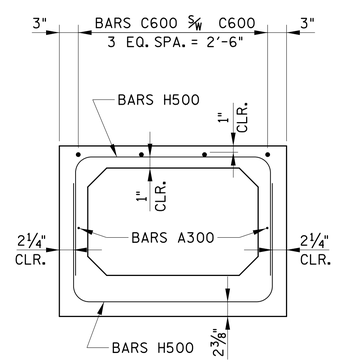


## SECTION A-A

(SHOWING NON-PROJECTED BARS)

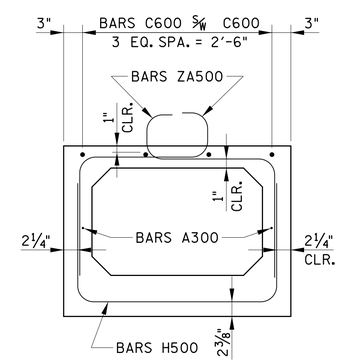


## SECTION A-A

(SHOWING PROJECTED BARS)

## ESTIMATED QUANTITIES PER BEAM

| NO. BEAMS REQ'D. | CLASS "A" CONCRETE C.Y. | REINFORCING STEEL LB. | PRESTRESSING STRANDS (LOW RELAXATION) LB. |
|---|---|---|---|
| 4 | 9.2 | 1625 | 1250 |

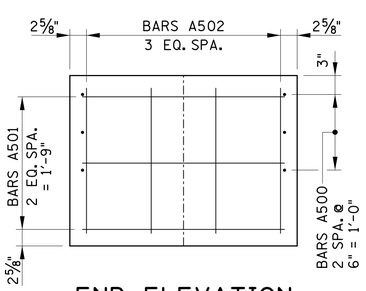


## END ELEVATION

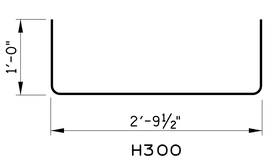


H300

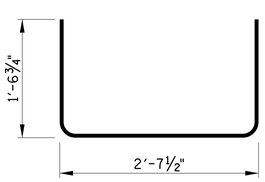


H500

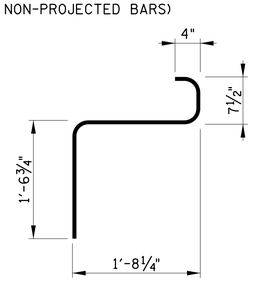


AZ500

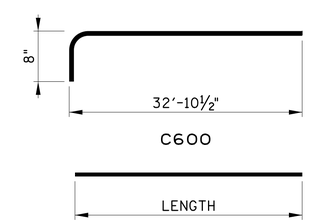


C600

LENGTH

A50- OR A300

UNOFFICIAL SET

NOT FOR BIDDING

ALT. "B"

STATE OF TENNESSEE
DEPARTMENT OF TRANSPORTATION

# PRESTRESSED BOX BEAM DETAILS
# STATE ROUTE 25 OVER LIBERTY BRANCH
# BR. NO. 83-SR25-10.89
# SUMNER COUNTY
# 2014

P.I.N. NO. 120026.00

| | | | |
|---|---|---|---|
| DESIGNED BY | GRESHAM SMITH & PARTNERS | DATE | 5/2014 |
| DRAWN BY | R. PALMER | DATE | 5/2014 |
| SUPERVISED BY | T. KNIAZEWYCZ | DATE | 5/2014 |
| CHECKED BY | T. KNIAZEWYCZ | DATE | 6/2014 |

GRESHAM SMITH AND PARTNERS

gyoun
P:\2807118\b\AHB\8071b18bgl.sht
8/5/2014
$PRF$

BR-117- 161

| CONST. NO. | | |
|---|---|---|
| PROJECT NO. | YEAR | SHEET NO. |
| 83005-4246-04 | 2014 | |

REVISIONS

| NO. | DATE | BY | BRIEF DESCRIPTION |
|---|---|---|---|
| | | | |

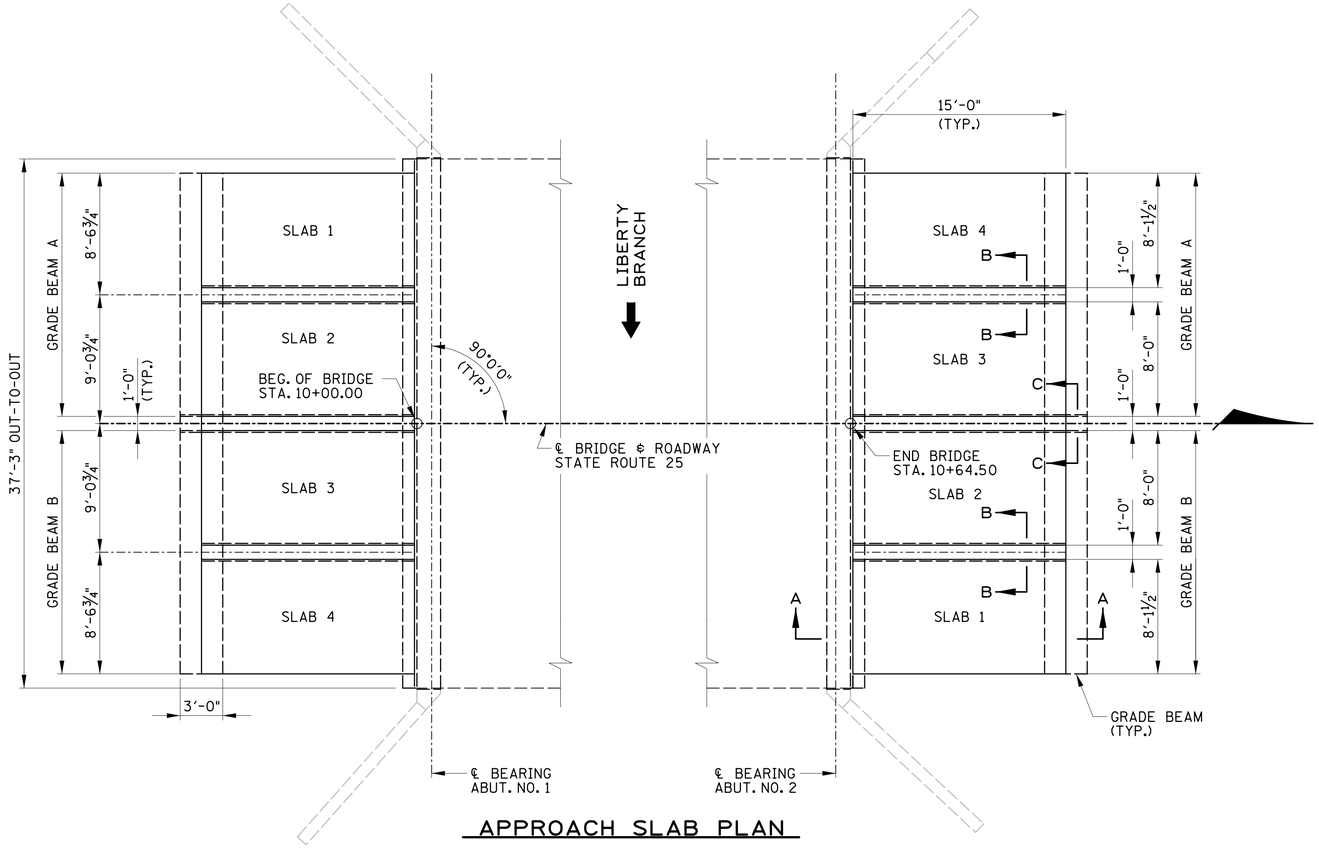


## APPROACH SLAB PLAN

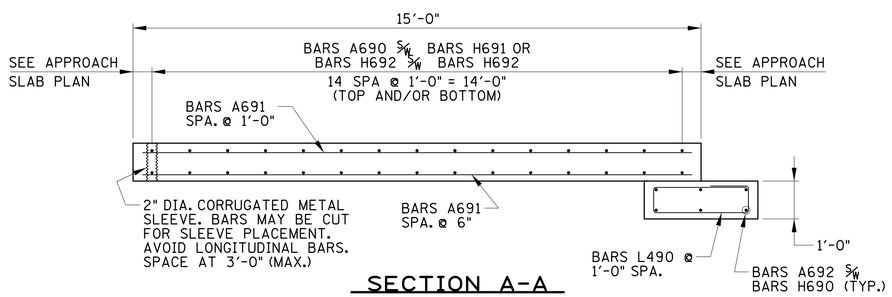


## SECTION A-A

PRECAST APPROACH SLAB

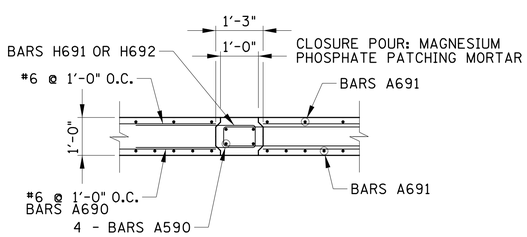


## SECTION B-B

ADJACENT APPROACH SLAB PANELS

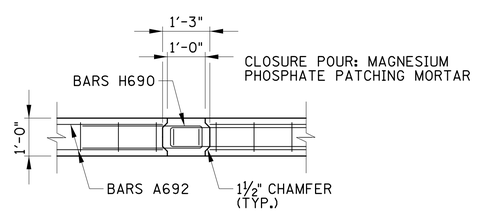


## SECTION C-C

AT GRADE BEAMS

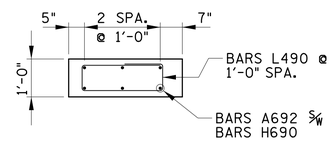


## SECTION D-D

@ GRADE BEAM A

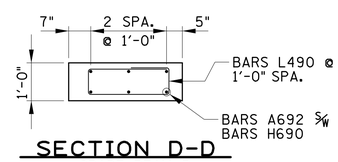


## SECTION D-D

@ GRADE BEAM B

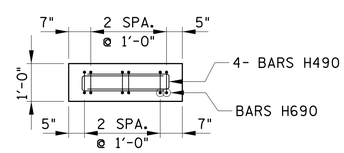


## CLOSURE POUR

@ GRADE BEAM

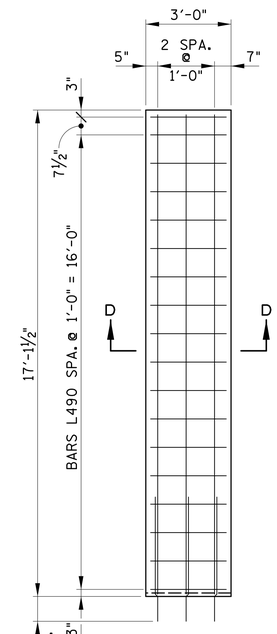


GRADE BEAM 'A'

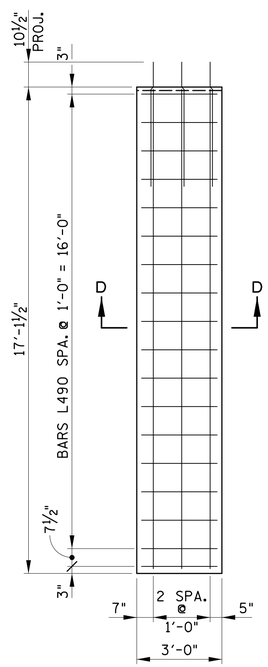


GRADE BEAM 'B'

UNOFFICIAL SET

NOT FOR BIDDING

ALT. "B"

STATE OF TENNESSEE
DEPARTMENT OF TRANSPORTATION

PAVEMENT AT BRIDGE ENDS DETAILS
STATE ROUTE 25
OVER
LIBERTY BRANCH
BR. NO. 83-SR25-10.89
SUMNER COUNTY
2014

PIN NO. 120026.00

| | | | |
|---|---|---|---|
| DESIGNED BY | GRESHAM SMITH & PARTNERS | DATE | 5/2014 |
| DRAWN BY | R. PALMER | DATE | 5/2014 |
| SUPERVISED BY | T. KNIAZEWYCZ | DATE | 5/2014 |
| CHECKED BY | T. KNIAZEWYCZ | DATE | 6/2014 |

GRESHAM SMITH AND PARTNERS

gyoun
P:\2807118\b\AltB\8071b18bs5.sht
8/5/2014
$PRF$

| CONST. NO. | | |
|---|---|---|
| PROJECT NO. | YEAR | SHEET NO. |
| 83005-4246-04 | 2014 | |

REVISIONS

| NO. | DATE | BY | BRIEF DESCRIPTION |
|---|---|---|---|
| | | | |

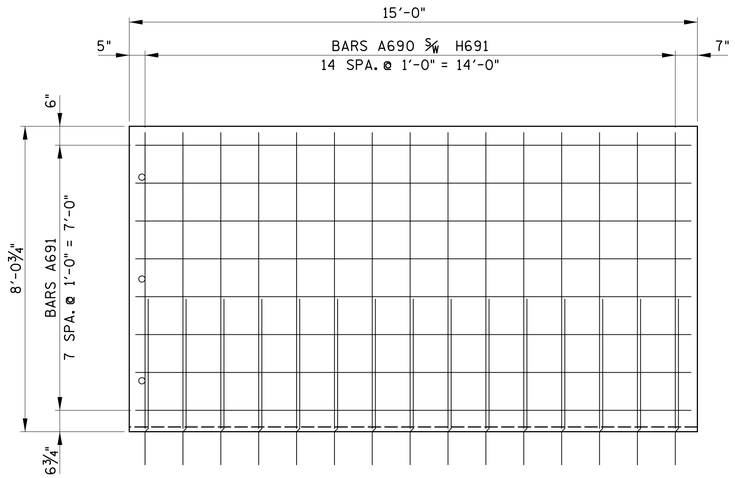


EXTERIOR APPROACH SLAB PANEL 1

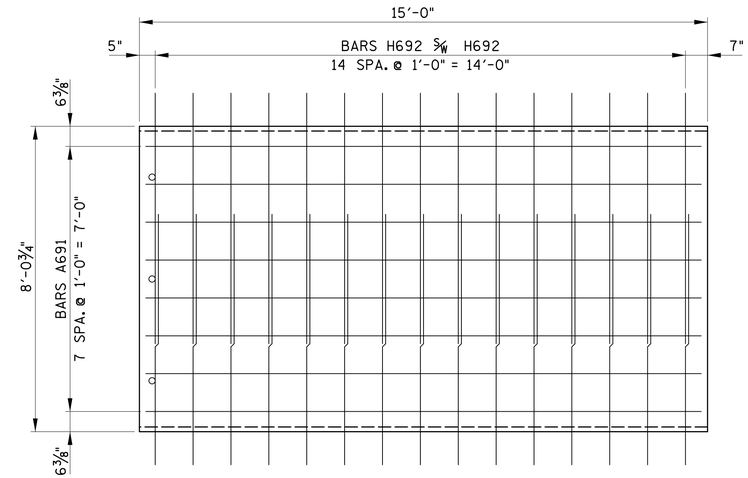


INTERIOR APPROACH SLAB PANEL 3

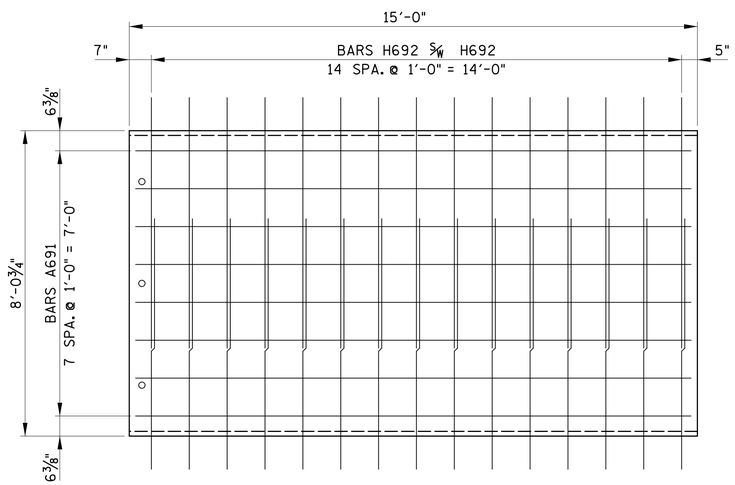


INTERIOR APPROACH SLAB PANEL 2

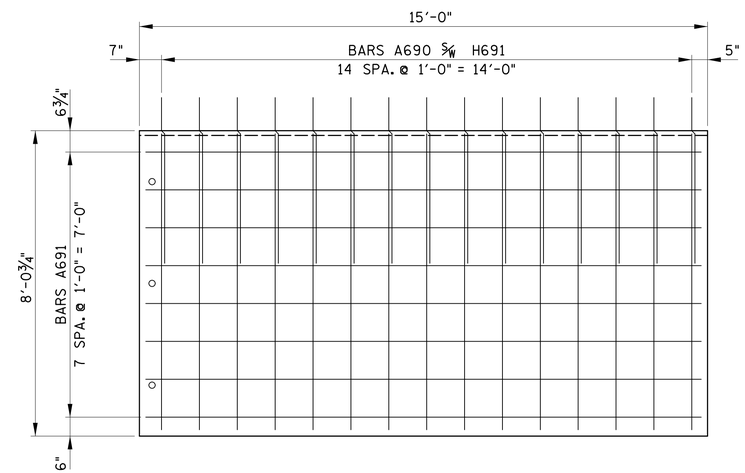


EXTERIOR APPROACH SLAB PANEL 4

○ SEE SECTION A-A ON SHEET BR-117-162
FOR CORRUGATED METAL SLEEVE INFORMATION
REBAR MAY BE ADJUSTED TO ACCOMODATE SLEEVES.

UNOFFICIAL SET

NOT FOR BIDDING

ALT. "B"

STATE OF TENNESSEE
DEPARTMENT OF TRANSPORTATION

PAVEMENT AT BRIDGE
ENDS DETAILS TOP MAT
STATE ROUTE 25
OVER
LIBERTY BRANCH
BR. NO. 83-SR25-10.89
SUMNER COUNTY
2014

P.I.N. NO. 120026.00

| | | | |
|---|---|---|---|
| DESIGNED BY | GRESHAM SMITH & PARTNERS | DATE | 5/2014 |
| DRAWN BY | R. PALMER | DATE | 5/2014 |
| SUPERVISED BY | T. KNIAZEWYCZ | DATE | 5/2014 |
| CHECKED BY | T. KNIAZEWYCZ | DATE | 6/2014 |

GS&P GRESHAM SMITH AND PARTNERS

gyoun
P:\2807118\b\AHB\8071b18bs6.sht
8/5/2014
$PRF$

| CONST. NO. | | |
|---|---|---|
| PROJECT NO. | YEAR | SHEET NO. |
| 83005-4246-04 | 2014 | |

REVISIONS

| NO. | DATE | BY | BRIEF DESCRIPTION |
|---|---|---|---|
| | | | |

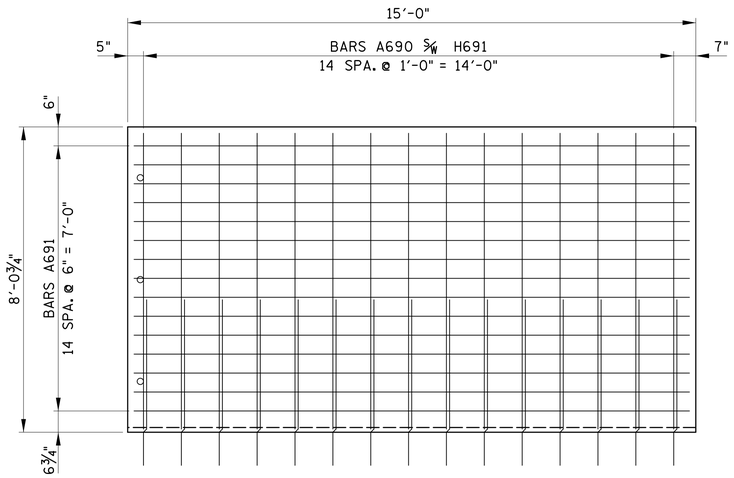


EXTERIOR APPROACH SLAB PANEL 1

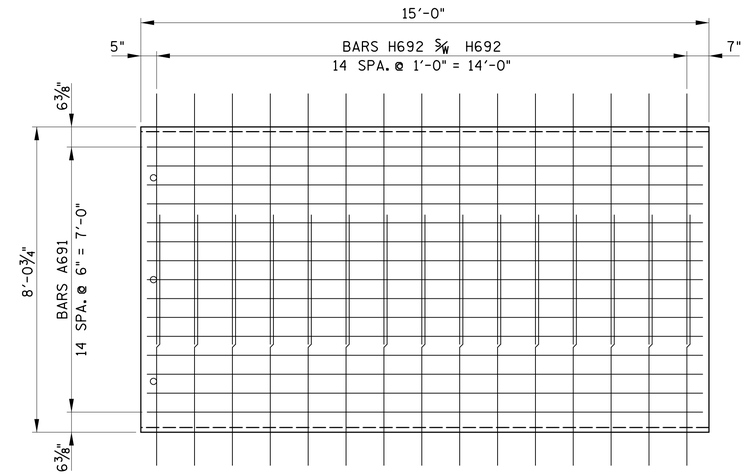


INTERIOR APPROACH SLAB PANEL 3

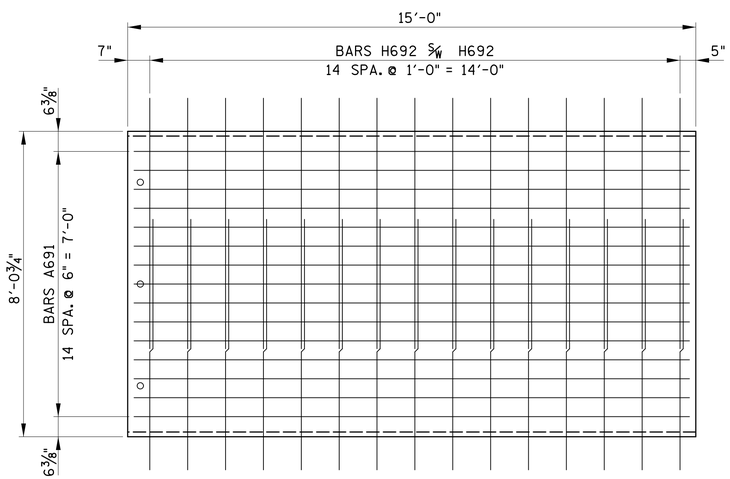


INTERIOR APPROACH SLAB PANEL 2

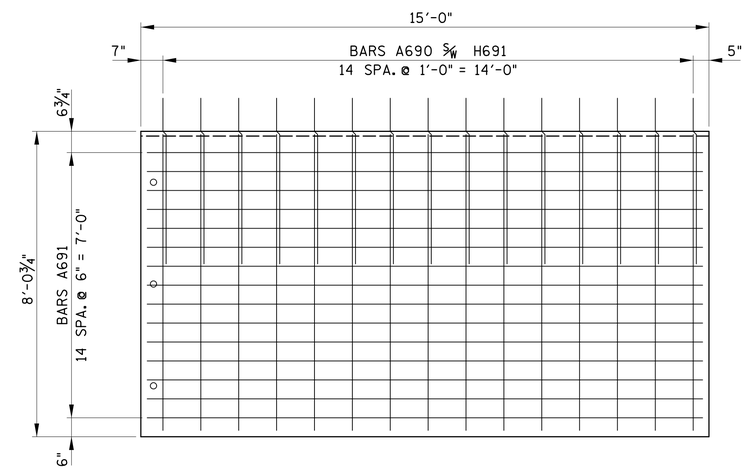


EXTERIOR APPROACH SLAB PANEL 4

○ SEE SECTION A-A ON SHEET BR-117-162
FOR CORRUGATED METAL SLEEVE INFORMATION
REBAR MAY BE ADJUSTED TO ACCOMODATE SLEEVES.

UNOFFICIAL SET

NOT FOR BIDDING

ALT. "B"

STATE OF TENNESSEE
DEPARTMENT OF TRANSPORTATION

PAVEMENT AT BRIDGE
ENDS DETAILS BOT. MAT
STATE ROUTE 25
OVER
LIBERTY BRANCH
BR. NO. 83-SR25-10.89
SUMNER COUNTY
2014

PIN NO. 120026.00

| | | | |
|---|---|---|---|
| DESIGNED BY | GRESHAM SMITH & PARTNERS | DATE | 5/2014 |
| DRAWN BY | R. PALMER | DATE | 5/2014 |
| SUPERVISED BY | T. KNIAZEWYCZ | DATE | 5/2014 |
| CHECKED BY | T. KNIAZEWYCZ | DATE | 6/2014 |

GRESHAM SMITH AND PARTNERS

gyoun
P:\2807118\b\Alt B\8071b18bs7.sht
8/5/2014
$PRF$

| CONST. NO. | | |
|---|---|---|
| PROJECT NO. | YEAR | SHEET NO. |
| 83005-4246-04 | 2014 | |

REVISIONS

| NO. | DATE | BY | BRIEF DESCRIPTION |
|---|---|---|---|
| | | | |

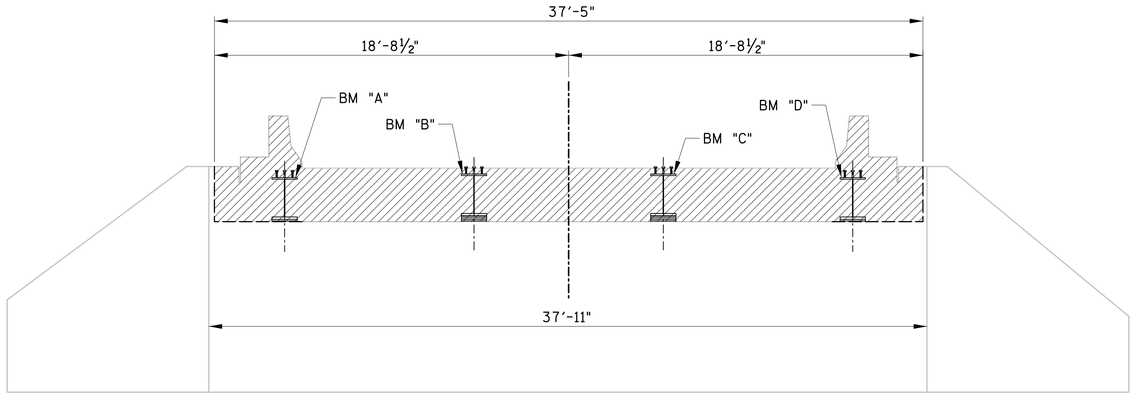


## ELEVATION

LOOKING BACK ON SURVEY
(SHOWING DEMOLITION DIMENSIONS)

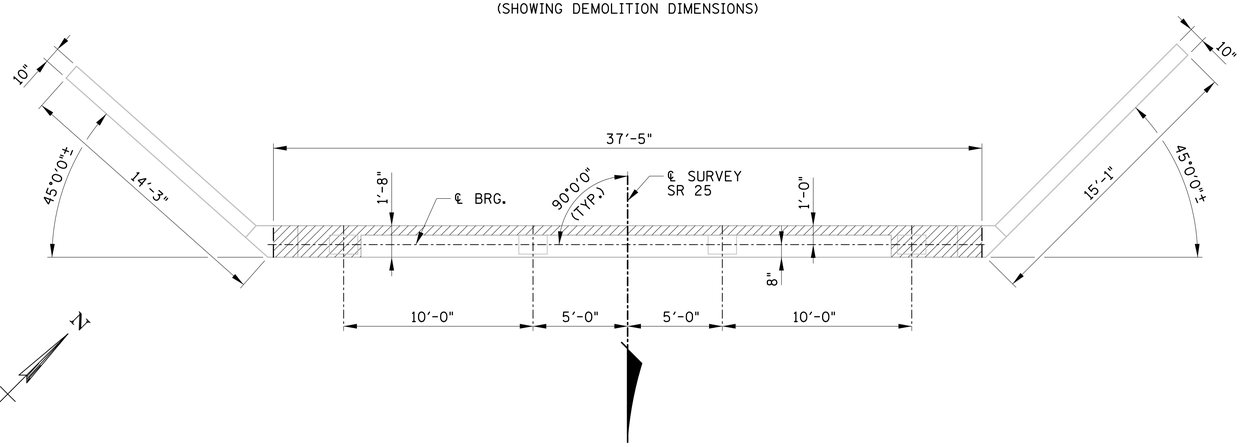


## PLAN

(SHOWING GENERAL DIMENSIONS)

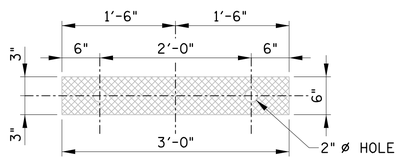


## BEARING PAD DETAIL

½" THICK PAD

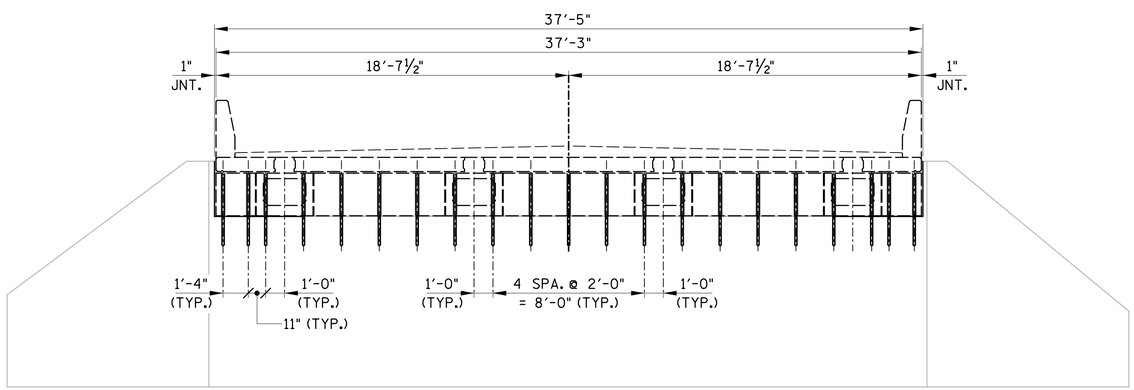


## ELEVATION

LOOKING BACK ON SURVEY
(SHOWING GENERAL DIMENSIONS)

UNOFFICIAL SET

NOT FOR BIDDING

ALT. "B"

STATE OF TENNESSEE
DEPARTMENT OF TRANSPORTATION

ALT. ABUTMENT NO. 1
EXISTING DETAILS
STATE ROUTE 25
OVER
LIBERTY BRANCH
BR. NO. 83-SR25-10.89
SUMNER COUNTY
2014

P.I.N. NO. 120026.00

| | | | |
|---|---|---|---|
| DESIGNED BY | GRESHAM SMITH & PARTNERS | DATE | 5/2014 |
| DRAWN BY | R. PALMER | DATE | 5/2014 |
| SUPERVISED BY | T. KNIAZEWYCZ | DATE | 5/2014 |
| CHECKED BY | T. KNIAZEWYCZ | DATE | 6/2014 |

GRESHAM SMITH AND PARTNERS

gyoun
P:\2807118\b\AHB\8071b18bal.sht
8/5/2014
$PRF$

CONST. NO. _____

| PROJECT NO. | YEAR | SHEET NO. |
|---|---|---|
| 83005-4246-04 | 2014 | |

REVISIONS

| NO. | DATE | BY | BRIEF DESCRIPTION |
|---|---|---|---|
| | | | |

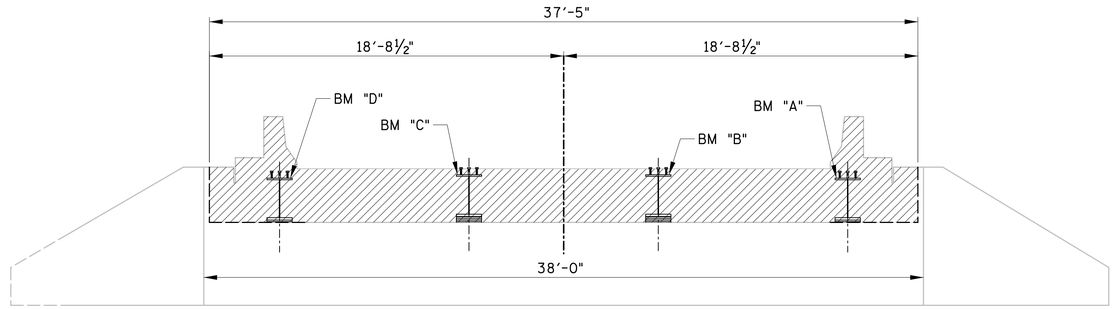


## ELEVATION

LOOKING AHEAD ON SURVEY
(SHOWING DEMOLITION DIMENSIONS)

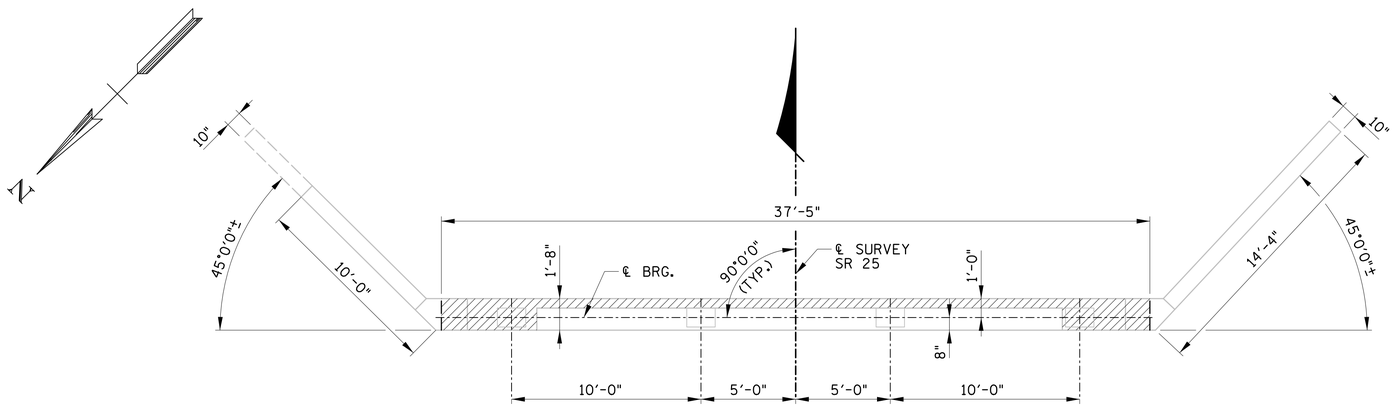


## PLAN

(SHOWING GENERAL DIMENSIONS)

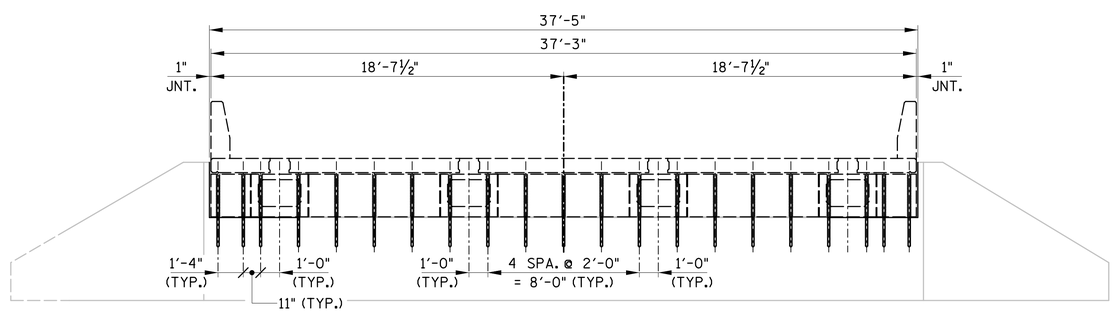


## ELEVATION

LOOKING BACK ON SURVEY
(SHOWING GENERAL DIMENSIONS)

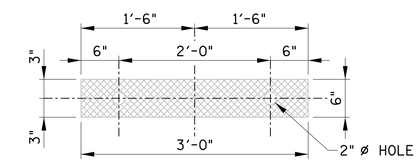


## BEARING PAD DETAIL

½" THICK PAD

UNOFFICIAL SET

NOT FOR BIDDING

ALT. "B"

STATE OF TENNESSEE
DEPARTMENT OF TRANSPORTATION

ABUTMENT NO. 2
EXISTING DEATAILS
STATE ROUTE 25
OVER
LIBERTY BRANCH
BR. NO. 83-SR25-10.89
SUMNER COUNTY
2014

BR-117- 166

gyoun
P:\2807118\b\AIHB\8071b18bb2.sht

8/5/2014
$PRF$

PIN NO. 120026.00

| | | | |
|---|---|---|---|
| DESIGNED BY | GRESHAM SMITH & PARTNERS | DATE | 5/2014 |
| DRAWN BY | R. PALMER | DATE | 5/2014 |
| SUPERVISED BY | T. KNIAZEWYCZ | DATE | 5/2014 |
| CHECKED BY | T. KNIAZEWYCZ | DATE | 6/2014 |

GS&P GRESHAM SMITH AND PARTNERS

| CONST. NO. | | |
|---|---|---|
| PROJECT NO. | YEAR | SHEET NO. |
| 83005-4246-04 | 2014 | |

REVISIONS

| NO. | DATE | BY | BRIEF DESCRIPTION |
|---|---|---|---|
| | | | |

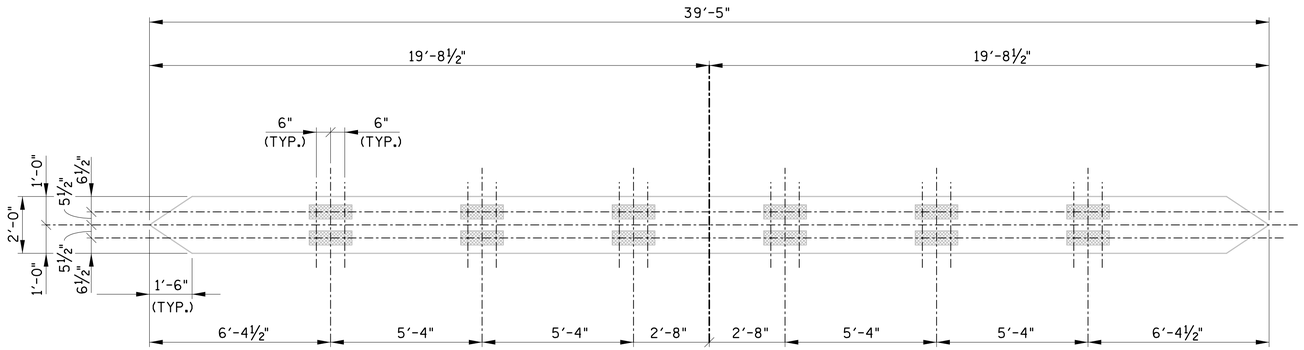


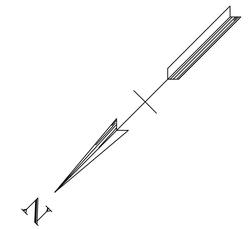


GENERAL PIER DETAILS
FOR INFORMATION ONLY

PIER TO BE DEMOLISHED
TO ONE FOOT BELOW
EXISTING GROUND LINE.

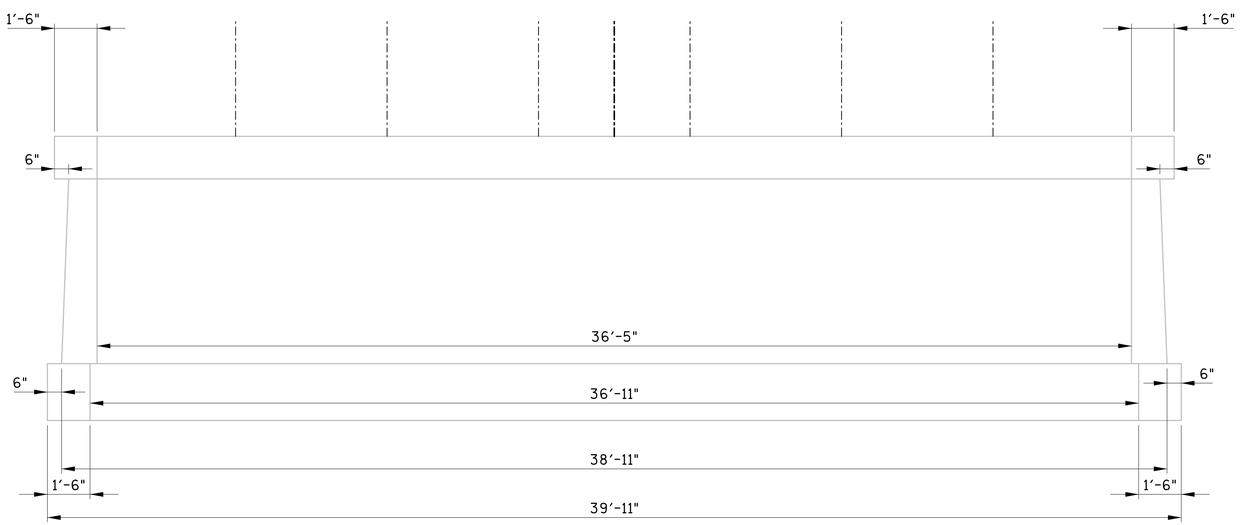


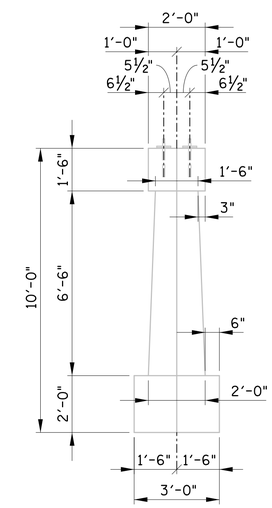


UNOFFICIAL SET

NOT FOR BIDDING

ALT. "B"

STATE OF TENNESSEE
DEPARTMENT OF TRANSPORTATION

PIER NO. 1
EXISTING DETAILS
STATE ROUTE 25
OVER
LIBERTY BRANCH
BR. NO. 83-SR25-10.89
SUMNER COUNTY
2014

PIN NO. 120026.00

| | | | |
|---|---|---|---|
| DESIGNED BY | GRESHAM SMITH & PARTNERS | DATE | 5/2014 |
| DRAWN BY | R. PALMER | DATE | 5/2014 |
| SUPERVISED BY | T. KNIAZEWYCZ | DATE | 5/2014 |
| CHECKED BY | T. KNIAZEWYCZ | DATE | 6/2014 |

GRESHAM SMITH AND PARTNERS

gyoun
P:\2807118\b\AHB\8071b18bb1.sht

8/5/2014
$PRF$

BR-117-167

CONST. NO. _____

| PROJECT NO. | YEAR | SHEET NO. |
|---|---|---|
| 83005-4246-04 | 2014 | |

REVISIONS

| NO. | DATE | BY | BRIEF DESCRIPTION |
|---|---|---|---|
| | | | |

## SUPERSTRUCTURE (EPOXY)

| BAR | LOCATION | SIZE | NO. REQ'D | BENDING DIMENSIONS A | B | C | D | LENGTH |
|---|---|---|---|---|---|---|---|---|
| A300E | SLAB PANEL | 3 | 114 | | | | | 7'-3" |
| A301E | SLAB PANEL | 3 | 342 | | | | | 7'-7" |
| | | | | | | | | |
| A500E | SLAB PANEL (END) | 5 | 66 | | | | | 6'-0" |
| A501E | SLAB PANEL (SPLICE) | 5 | 462 | | | | | 2'-0" |
| A502E | SLAB PANEL (INTER.) | 5 | 198 | | | | | 5'-2" |
| | | | | | | | | |
| A600E | SLAB PANEL | 6 | 94 | | | | | 36'-11" |
| A601E | SLAB PANEL CONN. | 6 | 16 | | | | | 33'-10" |
| A602E | SLAB PARAPET | 6 | 8 | | | | | 7'-3" |
| A603E | SLAB PARAPET | 6 | 24 | | | | | 7'-7" |
| A604E | END CONNECTION | 6 | 16 | | | | | 20'-0" |
| A605E | BLOCKS 1 AND 3 | 6 | 24 | | | | | 3'-3" |
| A606E | BLOCKS 1 AND 3 | 6 | 12 | | | | | 1'-9" |
| A607E | BLOCK 2 | 6 | 36 | | | | | 9'-7" |
| A608E | BLOCK 2 | 6 | 18 | | | | | 6'-7" |
| | | | | | | | | |
| B570E | PARAPET | 5 | 352 | 2'-8" | | | | 3'-3" |
| | | | | | | | | |
| H400E | END PANELS | 4 | 66 | 5" | 3'-0" | | | 6'-5" |
| | | | | | | | | |
| H500E | BLOCKS | 5 | 44 | 6" | 2'-9" | | | 6'-0" |
| | | | | | | | | |
| L500E | BLOCKS | 5 | 60 | 2'-4" | 7" | 1'-11" | | 9'-1" |
| L501E | BLOCKS | 5 | 32 | 1'-3" | 7" | 1'-11" | | 6'-11" |
| | | | | | | | | |

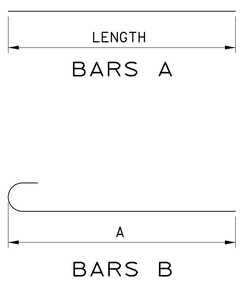


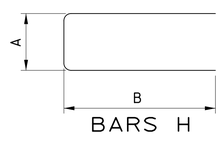


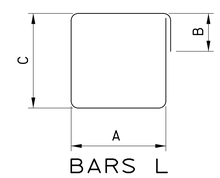


UNOFFICIAL SET

NOT FOR BIDDING

ALT. "B"

STATE OF TENNESSEE
DEPARTMENT OF TRANSPORTATION

BILL OF STEEL

STATE ROUTE 25
OVER
LIBERTY BRANCH
BR. NO. 83-SR25-10.89
SUMNER COUNTY
2014

BR-117- 167A

PIN NO. 120026.00

| | | | |
|---|---|---|---|
| DESIGNED BY | GRESHAM SMITH & PARTNERS | DATE | 5/2014 |
| DRAWN BY | R. PALMER | DATE | 5/2014 |
| SUPERVISED BY | T. KNIAZEWYCZ | DATE | 5/2014 |
| CHECKED BY | T. KNIAZEWYCZ | DATE | 6/2014 |

GRESHAM SMITH AND PARTNERS

gyoun
P:\2807118\b\AHB\8071b18br1.sht

8/5/2014
$PRF$