PROJECT NO.	YEAR	SHEET NO.
	1996	

REVISIONS

	NO.	DATE	BY	BRIEF DESCRIPTION
M/R	1	6-10-96	BRB	NEW METRIC STANDARD

610 x 2620 BRIDGE END DRAIN WITHOUT PAVEMENT AT BRIDGE ENDS

ESTIMATED QUANTITIES (PER DRAIN)

BRIDGE END DRAIN BOX	
CLASS "A" CONCRETE m^3	EPOXY COATED REINFORCING STEEL kg
1.1	139

NOTE: THE COST OF THE GRATE AND 1.1 m^3 OF CLASS "A" CONCRETE, 139 kg OF EPOXY COATED REINFORCING STEEL FOR THE BRIDGE END DRAIN BOX, ASPHALT AND ALL MISCELLANEOUS MATERIALS FOR INSTALLATION TO BE INCLUDED IN COST OF DRAIN BOX.

BRIDGE END DRAIN BOX BILL OF STEEL

BAR	LOCATION	SIZE	NO. REQ'D	LENGTH
A1380E	DRAIN	13	22	2745
CA1380E	DRAIN	13	10	1120
CA1381E	DRAIN	13	10	1020
H1380E	DRAIN	13	10	1220
H1381E	DRAIN	13	10	1065
H1382E	DRAIN	13	8	1625
H1383E	DRAIN	13	8	2030
T1380E	DRAIN	13	2	1735

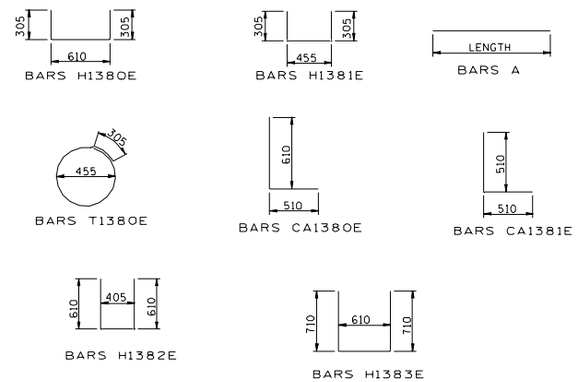

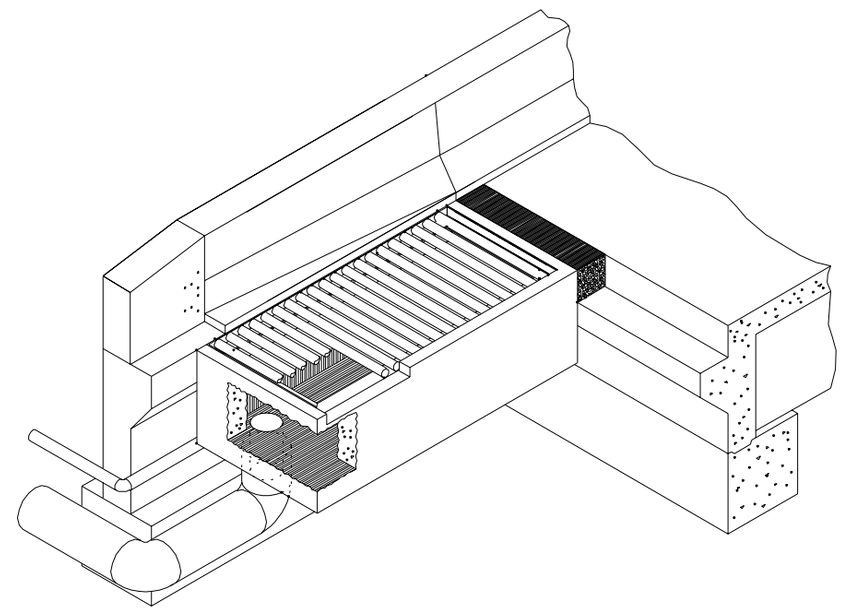

1220 x 2620 BRIDGE END DRAIN WITHOUT PAVEMENT AT BRIDGE ENDS

ESTIMATED QUANTITIES (PER DRAIN)

BRIDGE END DRAIN BOX	
CLASS "A" CONCRETE m^3	EPOXY COATED REINFORCING STEEL kg
1.6	178

NOTE: THE COST OF THE GRATE AND 1.6 m^3 OF CLASS "A" CONCRETE, 178 kg OF EPOXY COATED REINFORCING STEEL FOR THE BRIDGE END DRAIN BOX, ASPHALT AND ALL MISCELLANEOUS MATERIALS FOR INSTALLATION TO BE INCLUDED IN COST OF DRAIN BOX.

BRIDGE END DRAIN BOX BILL OF STEEL

BAR	LOCATION	SIZE	NO. REQ'D	LENGTH
A1380E	DRAIN	13	26	2745
CA1380E	DRAIN	13	14	1120
CA1381E	DRAIN	13	14	1020
H1380E	DRAIN	13	10	1830
H1381E	DRAIN	13	10	1675
H1382E	DRAIN	13	8	2240
H1383E	DRAIN	13	8	2650
T1380E	DRAIN	13	2	1735

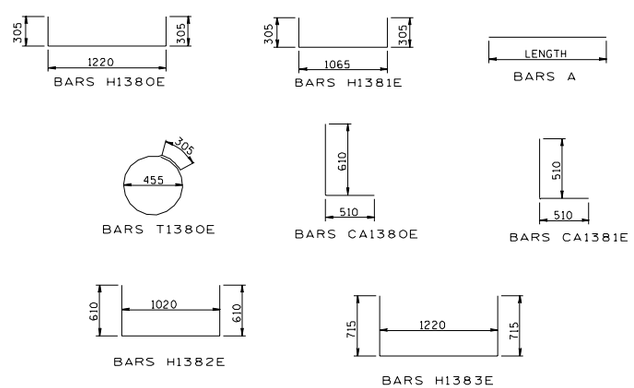

ALL UNITS ARE IN MILLIMETERS UNLESS NOTED OTHERWISE.

M/R MINOR REVISION - FHWA APPROVAL NOT REQUIRED

STATE OF TENNESSEE
DEPARTMENT OF TRANSPORTATION

BRIDGE END DRAIN DETAILS
610 x 2620 &
1220 x 2620 WITHOUT
PAVEMENT AT BRIDGE ENDS
1996

DESIGNED BY C.M. HILES DATE
DRAWN BY JM FRANKENFIELD DATE
SUPERVISED BY C.M. HILES DATE
CHECKED BY DATE

CORRECT Edward P. Wasserman
ENGINEER OF STRUCTURES

METRIC

SHEET 10 OF 13
STDM-1-10