PROJECT NO.	YEAR	SHEET NO.
	1996	

REVISIONS

NO.	DATE	BY	BRIEF DESCRIPTION
1	6-10-96	BRB	NEW METRIC STANDARD
2	7-31-00	CMH	REVISED WELD & ADDED SKEWED SECTION
3	1-5-01	CMH	REVISED NOTE

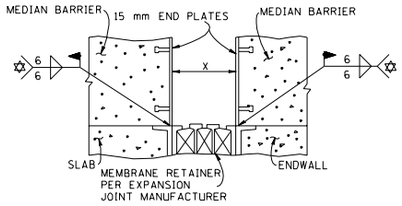

SECTION O - O

NOTE: WELD WIDTH OF CONTACT POINT

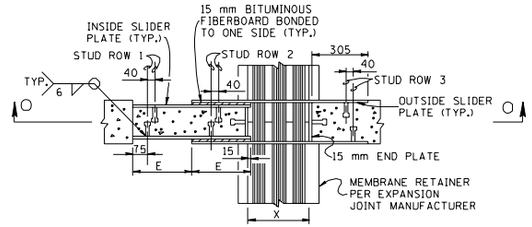

SECTION I - I

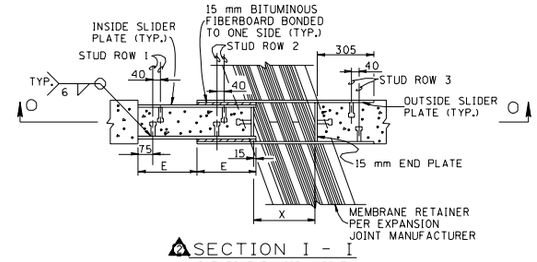

SECTION I - I
(SKEWED EXPANSION JOINT)

E DENOTES: ONE HALF OF THE TOTAL EXPANSION JOINT MOVEMENT PLUS (+) 75 mm, AT MID TEMPERATURE.

IF E IS LESS THAN 165 mm OMIT STUD ROW 2

X DENOTES: EXPANSION JOINT

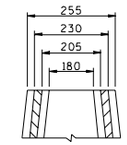

DETAIL X

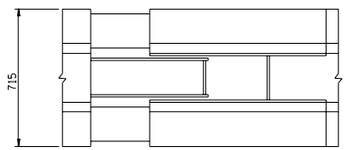

PLAN VIEW OF MEDIAN

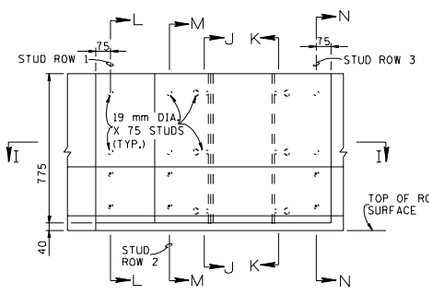

ELEVATION VIEW OF MEDIAN

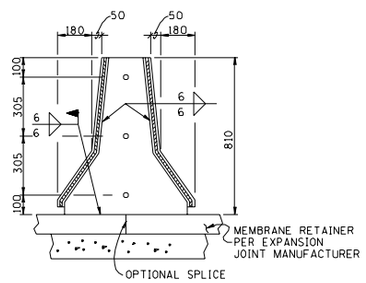

SECTION J - J
(SHOWING STUD SPACING IN END PLATE)

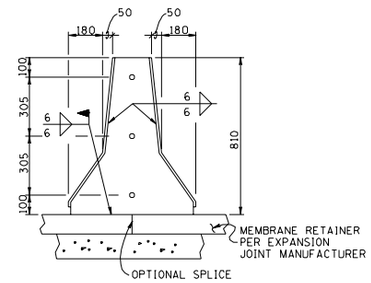

SECTION K - K
(SHOWING STUD SPACING IN END PLATE)

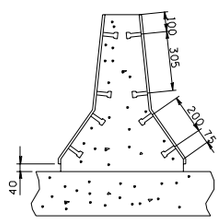

SECTION L - L OR N - N

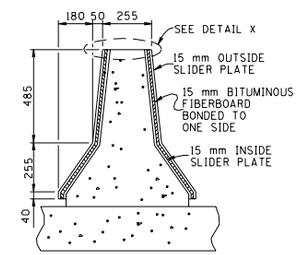

SECTION M - M
(810 mm MEDIAN)

NOTES:

ALL METAL PLATE MATERIAL SHALL BE (ASTM A709M) GRADE 250.

ALL WELDING, INCLUDING STUDS, SHALL BE COMPLETED PRIOR TO METAL PLATES BEING PAINTED OR GALVANIZED. ALL STEEL THAT IS PART OF THE JOINT ASSEMBLY SHALL BE PAINTED WITH 4 MILS OF INORGANIC ZINC OR GALVANIZED IN ACCORDANCE WITH ASTM STANDARD SPECIFICATION A123, UNLESS SHOWN OTHERWISE ON PLANS.

NOTE: CONTRACTOR SHALL SUBMIT A COMPLETE SET OF SHOP DRAWINGS TO THE DEPARTMENT OF TRANSPORTATION, DIVISION OF STRUCTURES FOR REVIEW BEFORE BEGINNING FABRICATION.

NOTE: ALL CONCRETE POURS SHALL BE WELL CONSOLIDATED AROUND THE SLIDER PLATE ASSEMBLIES.

NOTE: COST OF STRUCTURAL STEEL, FORMING, LABOR AND ALL MISCELLANEOUS MATERIALS NECESSARY TO COMPLETE THE INSTALLATION OF SLIDER PLATE ASSEMBLIES TO BE INCLUDED IN EXPANSION DEVICE.

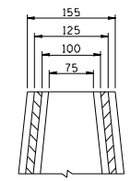

DETAIL Y

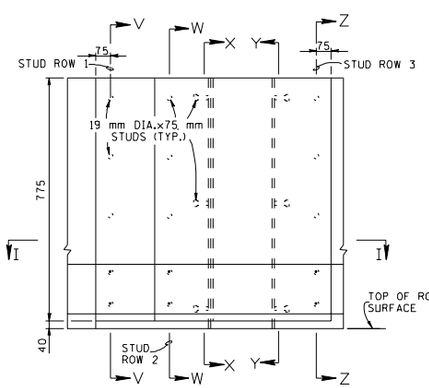

ELEVATION VIEW OF MEDIAN

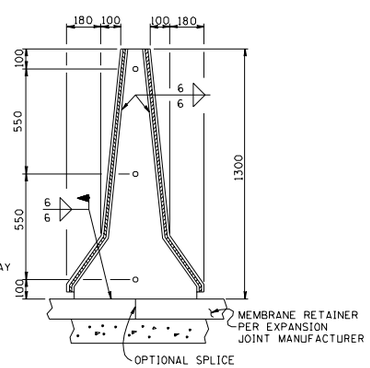

SECTION X - X
(SHOWING STUD SPACING IN END PLATE)

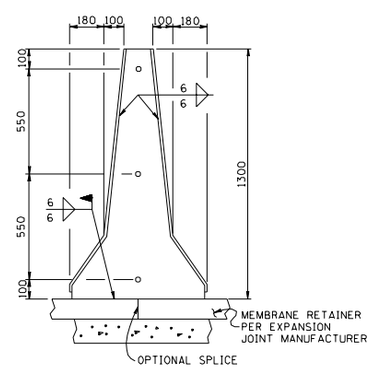

SECTION Y - Y
(SHOWING STUD SPACING IN END PLATE)

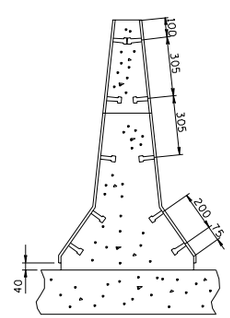

SECTION V - V OR Z - Z

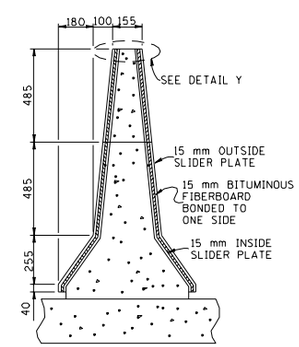

SECTION W - W
(1300 mm MEDIAN)

ALL UNITS ARE IN MILLIMETERS UNLESS NOTED OTHERWISE.

M/R MINOR REVISION - FHWA APPROVAL NOT REQUIRED

STATE OF TENNESSEE
DEPARTMENT OF TRANSPORTATION

STEEL SLIDER PLATE ASSEMBLIES FOR CONCRETE MEDIAN BARRIER 1996

DESIGNED BY C.M. HILES	DATE 12-92		
DRAWN BY KIM FRANKENFIELD	DATE 12-92		
SUPERVISED BY C.M. HILES	DATE 12-92		
CHECKED BY C.M. HILES	DATE		

CORRECT Edward P. Wasserman
ENGINEER OF STRUCTURES

DIVISION OF METRIC STANDARDS

SHEET 4 OF 13

STDM-1-4